THIRD ANGLE PROJECTION ALL DIMENSIONS IN INCHES IF IN DOUBT ASK

TOLERANCE UNLESS OTHERWISE STATED		
GENERAL TOLERANCE		
NO DECIMAL PLACE	±	0.020 INS.
ONE DECIMAL PLACE	±	0.010 INS
TWO DECIMAL PLACES	±	0.004 INS.
ANGLES	±	1°

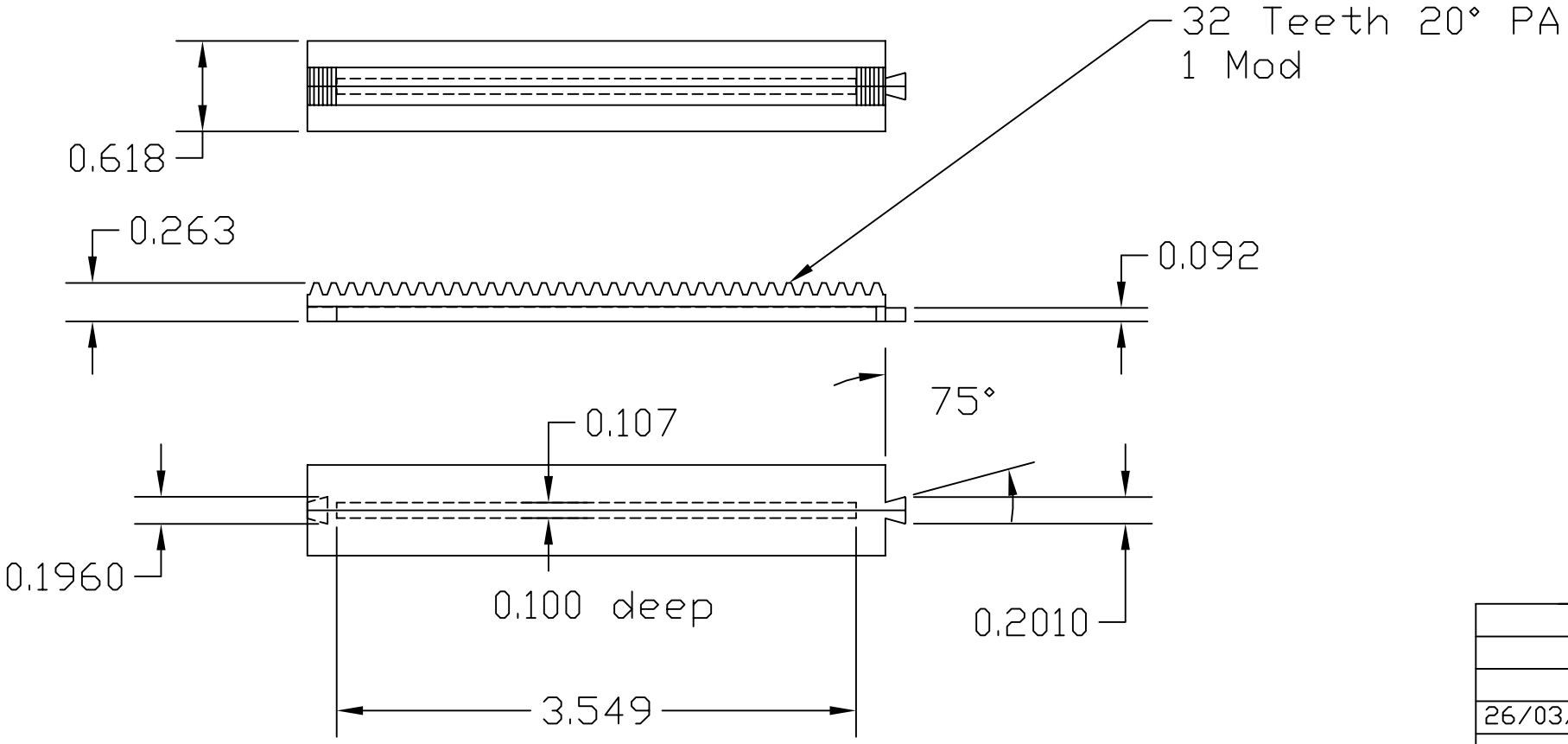

26/03/02	1
Date	Issue

DESCRIPTION :1 MOD RACK

PROD Code: PEN 4920

MATERIAL : NYLON	BLACK	drawn	checked	date	PART No.: 4920
SCALE : NTS	FINISH : CLEAN	RS		26/03/02	DRAWING No. : T 010