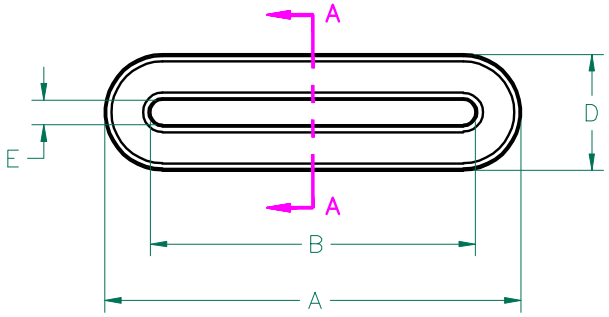

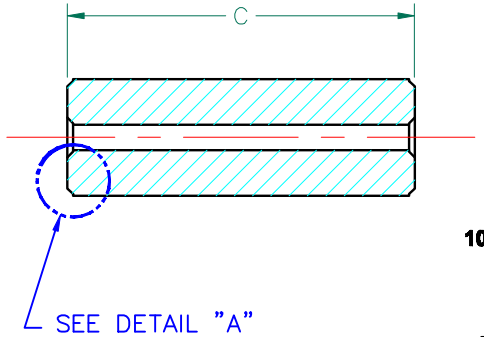

IMPEDANCE (Z)			
Frequency	25 MHz	100 MHz	300 MHz
Nominal (REF)	57 Ω	140 Ω	308 Ω
Minimum	- Ω	112 Ω	- Ω

Z vs. FREQUENCY
(REF. ONLY)

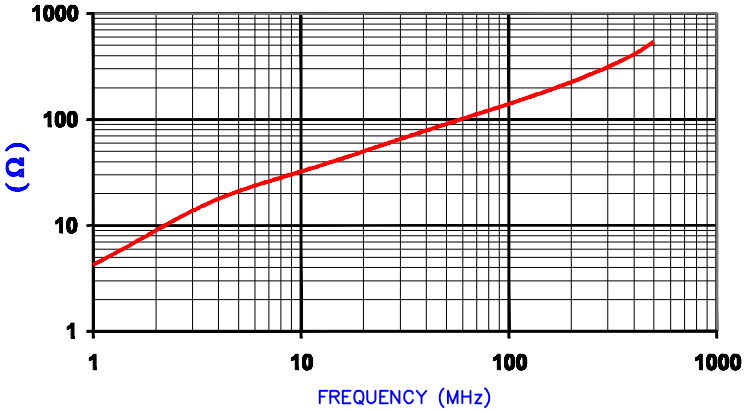

AGILENT E4991A Impedance/Material Analyzer
HP 16092A-Test Fixture TEST REF. 4481

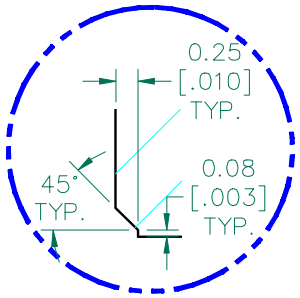

DETAIL "A"
CHAMFER
SCALE=12:1

UNCONTROLLED DOCUMENT

FERRITE CORE DIMENSIONS (SPEC): mm [in]

A	19.20 [.756]	±	0.29	[.011]
B	15.00 [.591]	±	0.23	[.009]
C	16.00 [.630]	±	0.32	[.013]
D	5.35 [.211]	±	0.25	[.010]
		+	0.25	[.010]
E	1.15 [.045]	−	0.15	[.006]

WEIGHT/1000 6.27 kgs [13.82 Lbs]

SCALE DRAWING 1:1

28R0756−200

DIMENSIONS ARE IN mm [INCHES].

REV	DESCRIPTION	DATE	INT
D	UPDATE Z SPECS AND COMPANY LOGO	07/27/07	JRK
C	UPDATE Z SPECS & ADD TEST REF. #	11/16/04	TMB
B	CHANGE PRINT FORMAT CHANGE Z SPECS	02/17/03	TMB
A	ORIGINAL DRAFT	10/18/02	TMB

THIS DOCUMENT CONTAINS INFORMATION WHICH IS PROPRIETARY AND CONFIDENTIAL TO STEWARD. NO PRODUCTION OR PUBLICATION OF THIS DOCUMENT IN WHOLE OR IN PART SHALL BE MADE WITHOUT WRITTEN AUTHORIZATION FROM STEWARD.

Steward

PROJECT/PART NUMBER:	REV	PART TYPE:	DRAWN BY:
28R0756−200	D	FERRITE RIBBON CORE	TMB
DATE: 10/18/02	SCALE: 3:1	MATERIAL: NiZn Ferrite	
CAD # 28R0756−200−D	TOOL # R0756		