THIS DRAWING IS UNPUBLISHED. RELEASED FOR PUBLICATION - , - .
© COPYRIGHT - By - ALL RIGHTS RESERVED.

LOC	DIST
CM	00

REVISIONS

P	LTR	DESCRIPTION	DATE	DWN	APVD
	Y2	REVISED PER ECO-11-004587	11MAR11	RK	HMR

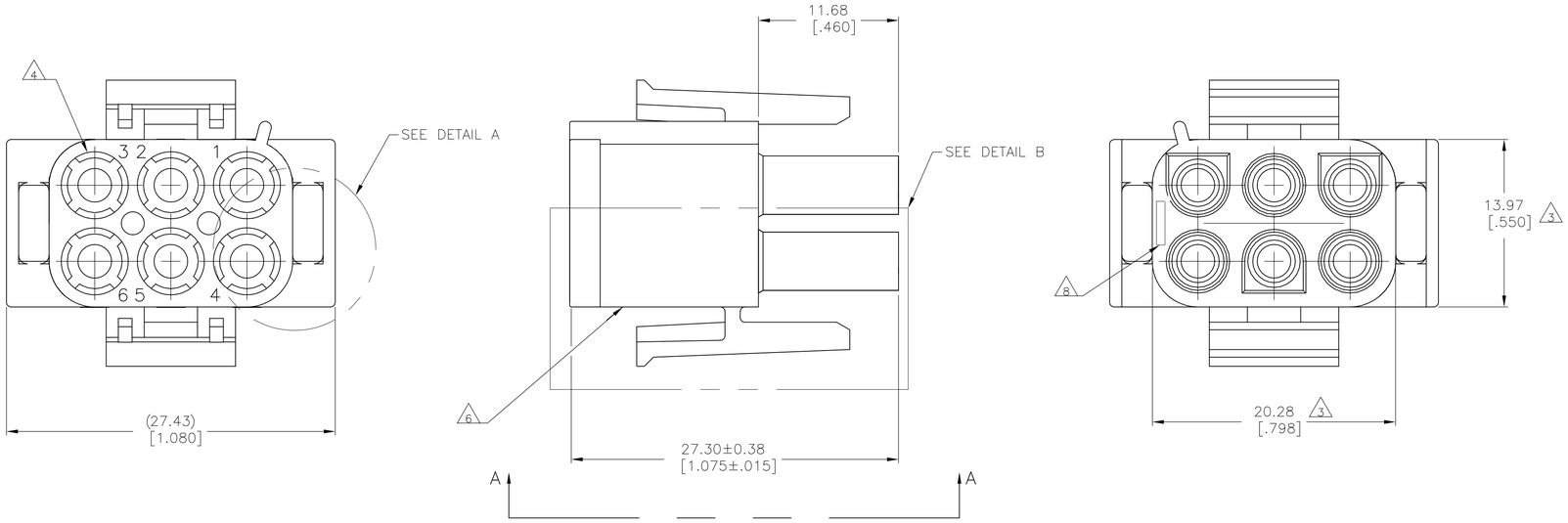

1. MATES WITH APPROPRIATE UNIVERSAL MATE-N-LOK™CAP OR HEADER.
2. SMALL NICKS ARE PERMITTED ON THE CIRCUIT TOWERS WHICH COULD INCREASE THE INITIAL HOUSING MATING FORCE BY UP TO 4.4 NEWTONS [1.0 LBS]. NO INDIVIDUAL NICKED TOWER SHALL INCREASE THIS FORCE BY OVER 2.2 NEWTONS [.5 LBS].

3. DIMENSION INDICATED IS AS MOLDED. ADDITIONAL GROWTH DUE TO SUBSEQUENT MOISTURE ABSORPTION MAY OCCUR.

4. FOUR RIBS EQUALLY SPACED, NO SPECIFIC ORIENTATION. NO RIBS OR SIX RIBS EQUALLY SPACED, NO SPECIFIC ORIENTATION,OPTIONAL.

5. NOT MANUFACTURED IN U.S.

6. UNDERWRITERS RECOGNIZED COMPONENT LOGO AND CSA CERTIFICATION LOGO TO BE LOCATED ONCE EACH ON SIDE OF HOUSING.

7. MANUFACTURING LOCATION ID ON SIDE OF HOUSING (OPTIONAL).

8. TRADEMARK LOCATION (AMP OR TE CONNECTIVITY).

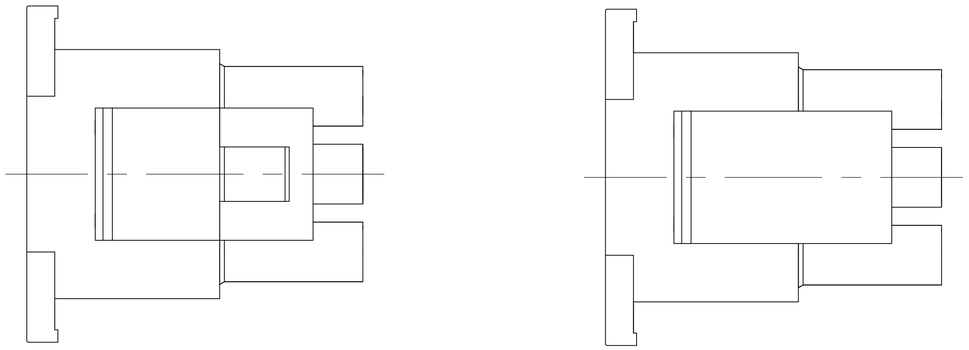

VIEW A-A
350715-4 ONLY

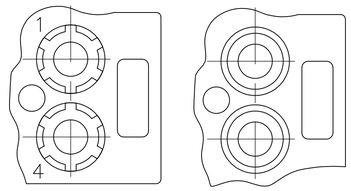

DETAIL A
OPTIONAL CONSTRUCTION

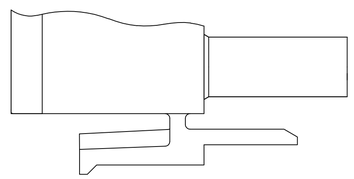

DETAIL B
350715-4 ONLY

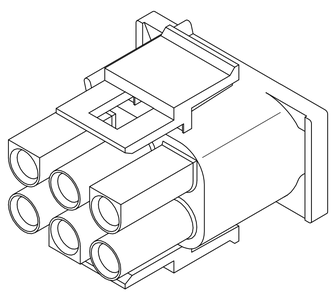

350715-4 3-DIMENSIONAL MODEL
NTS

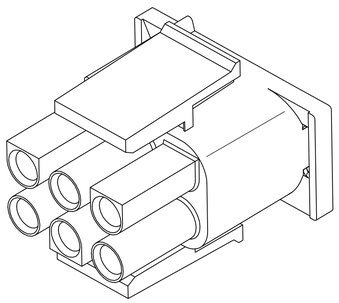

3-DIMENSIONAL MODEL
NTS

BLACK	1-350715-9
GRAY	1-350715-8
BLUE	1-350715-6
GREEN	1-350715-5
YELLOW	1-350715-4
ORANGE	1-350715-3
RED	1-350715-2
BROWN	1-350715-1
5	350715-4
NATURAL	350715-1
COLOR	PART NUMBER

METRIC

THIS DRAWING IS A CONTROLLED DOCUMENT.

DIMENSIONS: mm [INCHES]

TOLERANCES UNLESS OTHERWISE SPECIFIED:
0 PLC ± -
1 PLC ± -
2 PLC ± 0.13 [.005]
3 PLC ± -
4 PLC ± -
ANGLES ± -

MATERIAL: NYLON, UL 94V-0
FINISH: -

DWN S. HOOVER 14APR04
CHK S. RIDGILL 14APR04
APVD S. RIDGILL 14APR04
PRODUCT SPEC —
APPLICATION SPEC —
WEIGHT —

TE Connectivity

NAME: PLUG, 6 CIRCUIT, UNIVERSAL MATE-N-LOK(TM)

SIZE	CAGE CODE	DRAWING NO	RESTRICTED TO
A1	00779	C-350715	—

CUSTOMER DRAWING | SCALE 4:1 | SHEET 1 OF 1 | REV Y2