PIC32MZ1025W104 MCU and WFI32E01 Module with Wi-Fi® and Hardware-based Security Accelerator Data Sheet

INTRODUCTION

The PIC32MZ W1 Family (PIC32MZ1025W104132 devices) is a general purpose, low-cost, 32-bit Microcontroller (MCU) with the Wi-Fi and network connectivity, hardware-based security accelerator, transceiver and Power Management Unit (PMU). It supports interface to an External Front-End Module.

The WFI32E01 is a fully RF certified wireless module that contains the PIC32MZ1025W104 SoC and an integrated Front-end Module (FEM) with following antenna options:

- PCB Antenna (WFI32E01PC/WFI32E01PE)
- U.FL Connector (WFI32E01UC/WFI32E01UE) for External Antenna

The PIC32MZ W1 Family supports rich set of standard PIC32 peripherals such as Wi-Fi, Ethernet MAC, USB, CAN, CAN-FD, SPI, I^2C, SQI, UART and JTAG.

TCP/IP based connectivity protocols along with SSL support enables a low-cost, low complexity system to obtain full-featured internet connectivity and reliable information exchange.

PIC32MZ W1 Family FEATURES

The following section lists the PIC32MZ1025W104 related features.

Wireless Interfaces

- PHY:
  - IEEE® 802.11 b/g/n WLAN link
  - Single spatial stream of 20 MHz channel bandwidth
  - External FEM support for Power Amplifier (PA), Low Noise Amplifier (LNA), Transmitter/Receiver (TX/RX) switch
  - 2.4 GHz (2400 ~ 2483.5 MHz) ISM band
- MAC:
  - Infrastructure BSS STA mode
  - Soft-AP mode functionality
  - Active and passive scanning
  - Transmit power control support over temperature and voltage
- Security:
  - WPA3 personal (SAE and PMF-802.11w)
  - WPA2 personal, with options for WPA compatibility and PMF
  - WEP
- Harmony Networking:
  - Out of box support for MPLAB® Harmony v3 TCP/IP Stack
  - TLS v1.2 with symmetric/asymmetric crypto acceleration

200 MHz, MIPS32® M-Class Microprocessor Core

- 16 KB I-Cache, 16 KB D-Cache
- Fixed Mapping Translation (FMT) based MMU for Optimum Embedded OS Execution
- microMIPS™ Mode for Up to 35% Smaller Code Size
- DSP-enhanced Core:
  - Four 64-bit accumulators
  - Single-cycle MAC, saturating and fractional math
- Code-efficient (c and assembly) architecture

On-Chip Flash and SRAM

- 1 MB Flash Program Memory
- 64 KB Boot Program Flash
- 256 KB SRAM (Program and Data)
- 64 KB Data Buffer (DBF)
- Dedicated Buffer for Peripherals

Power Management and System Recovery

- Low-Power Modes (Dream and Sleep)
- Integrated Power-on Reset (POR) and Brown-out Reset (BOR)
- Secondary Oscillator and Fail Safe Clock Switch
- Fast Power-up and Brown-out Recovery

Security

- Hardware Accelerated Security Modes (with Built-in DMA Support)
- Crypto Engine with True Random Number Generator (TRNG) for Data Encryption/decryption and Authentication (AES, 3DES, SHA, MD5 and HMAC)
- AES Modes:
  - Electronic Codebook (ECB)
  - Cypher Block Chaining (CBC)
  - Counter Mode (CTR)
  - Cypher Feedback Mode (CFB)
  - Output Feedback Mode (OFB)
  - Galois/Counter Mode (GCM)
- Hardware Accelerated Public Key Cryptography with Support for:
  - 16-DSP multipliers configuration
  - 256-bit ECC/ECDH/ECDSA/Curve25519
  - 256-bit Ed25519
  - 512-bit ECC/ECDH/ECDSA generation

Clock Management

- 40 MHz Primary Oscillator (POSC)
- 32.768 kHz Secondary Oscillator (SOSC)
- Power-up Timer (PWRT) and Oscillator Start-up Timer (OST)
- Programmable PLLs and Oscillator Clock Sources
- Fail-Safe Clock Monitor (FSCM)
- On-chip Clock Sources:
  - 8 MHz Fast RC (FRC) oscillator
  - 32.768 kHz Low-Power RC (LPRC) oscillator
- Programmable PLLs and Oscillator Clock Sources
- Independent Watchdog Timer (WDT) and Deadman Timer (DMT)
- Fast Wake-up and Start-up
- Support for Precise Reference Clocks to External Devices

© 2020 Microchip Technology Inc.

Direct Memory Access (DMA)
- Eight Channels with Automatic Data Size Detection
- Programmable 32-bit Cyclic Redundancy Check (CRC)

Advanced Analog
- 12-bit ADC Module:
  - 2 MSPS with two Sample and Hold (S&H) circuits (one dedicated and one shared)
  - Up to 24 analog inputs
  - Sleep and Idle mode operations
  - Multiple trigger sources
  - Two digital comparators and two digital filters
  - Supports Touch Interface
  - 20 Analog Channels

Communication Interfaces
- Up to Two CAN Modules (CAN and CAN-FD)
  - 2.0B Active with DeviceNet™ addressing support
- IEEE 1588 Precision Time Protocol (PTP)
- Up to Three UART Modules (10 Mbps):
  - Supports RS-232, RS-485, LIN 2.1 and IrDA Protocols
- One Ethernet MAC Module (10/100 Mbps) with RMII Interface and Dedicated DMA:
  - Time synchronization support between Wi-Fi and Ethernet
- Up to Two SPI (one 4-wire, one 3-wire) Modules with Speed up to 40 MHz
- SQI Configurable as an Additional SPI Module (40 MHz)
- One Full-Speed USB 2.0 OTG Interface with Dedicated DMA
- Two I^2C Modules (Up to 1 Mbaud) with SMBus Support

Timers/Output Compare/Input Capture
- Seven 16-bit or up to Three 32-bit Timers/Counters
- Four Output Compare (OC) Modules
- Four Input Capture (IC) Modules
- Low-power Precision Real-Time Clock and Calendar (RTCC)

Input/Output
- High Current Source/Sink (up to 25 mA) on All I/O Pins
- Configurable Open-Drain, Pull-up, Pull-down and Slew Rate Controls
- External interrupts on all I/O Pins
- Peripheral Pin Select (PPS) to Enable Function Remap
- 64 GPIO Pins

Peripheral Trigger Generator (PTG)
- PTG with 8-bit User Command for Scheduling Complex Sequences

Qualification and Class B Support
- Class B Safety Library, IEC 60730

Debugger Development Support
- In-circuit and In-application Programming
- 4-wire MIPS® Enhanced JTAG Interface
- Unlimited Software, 8 Instruction and 4 Data Complex Hardware Breakpoints
- IEEE 1149.2-Compatible (JTAG) Boundary Scan
- iFlowtrace functionality support:
  - Off-chip Buffering of iFlowTrace Messages

Software and Tools Support
- C/C++ Compiler with Native DSP/fractional
- MPLAB® Harmony Integrated Software Framework:
  - TCP/IP, USB, Graphics and mTouch™ Middleware
  - MFi, Android™
  - RTOS Kernels: Express Logic ThreadX, FreeRTOS™, OPENRTOS®, Micriμm® μC/OS™ and SEGGER embOS®
- Supports Over-the-Air (OTA) and Over-the-Host (OTH) Firmware Update Modes

Package and Operating Conditions
- Package:
  - 132-pin DQFN
  - Size - 10 x 10 x 0.9 mm
- Operating conditions:
  - 2.97V to 3.63V, -40ºC to +105ºC, DC to 200 MHz

WFI32E01 MODULE FEATURES

The following section lists the WFI32E01 module related features, which complements SoC features.

Antenna Options
- PCB Antenna Variants:
  - WFI32E01PC
  - WFI32E01PE
- External Antenna Variants:
  - WFI32E01UC
  - WFI32E01UE

Wireless Feature
- On-board FEM/PA to Meet the TX Power Requirements

Security
- Integrated Trust&GO

Clock Management
- Integrated 40 MHz POSC

Advanced Analog
- 12 Analog Channels

Input/Output
- 37 GPIO Pins

Package and Operating Conditions
- Package:
  - 54-pin SMD package with Shield CAN
  - Size - 24.5 x 20.5 x 2.5 mm
- Operating conditions:
  - 3.0V to 3.6V, -40ºC to +85ºC, DC to 200 MHz

Certifications
- WFI32E01 Module Certified to FCC, ISED and CE Radio Regulations
- RoHS and REACH Compliant

 © 2020 Microchip Technology Inc.

TABLE 1: PIC32MZ1025W104 SoC FEATURES

SoC Name	Program Memory (KB)	Data Memory (KB)	Pins	Package	Boot Flash Memory (KB)	Wireless/RF		Remappable Peripherals							Crypto	Asymmetric Crypto	TrustGO	TRNG	DMA Channels (Programmable/ Dedicated)	ADC Channels	CVD	ADC Enhanced CVD	PTG	USB 2.0 OTG FS	I²C	SPI	UART	SQI	RTCC	Ethernet MAC	I/O Pins	ICSP	JTAG	Trace
						802.11 b/g/n	Channel BW (MHz)	Remappable Pins	Timers/ Capture/ Compare(1)	UART	SPI/I²S	CAN-FD (1.0)	CAN (2.0 A/B)																					
PIC32MZ1025W104132	1024	256	132	DQFN	64	1x1	20	58	7/4/4	2	1	1	1	Y	Y	N	Y	8	20	Y	Y	1	1	2	1	1	Y	Y	Y	64	Y	Y	Y

TABLE 2: WFI32E01 MODULE FEATURES

Module Name	Program Memory (KB)	Data Memory (KB)	Pins	Package	Boot Flash Memory (KB)	Wireless/RF			Remappable Peripherals							Crypto	Asymmetric Crypto	TrustGO	TRNG	DMA Channels (Programmable/ Dedicated)	ADC Channels	CVD	ADC Enhanced CVD	PTG	USB 2.0 OTG FS	I²C	SPI	UART	SQI	RTCC	Ethernet MAC	I/O Pins	ICSP	JTAG	Trace	Antenna Options
						On-board FEM	802.11 b/g/n	Channel BW (MHz)	Remappable Pins	Timers/ Capture/ Compare(1)	UART	SPI/I²S	CAN-FD (1.0)	CAN (2.0 A/B)																						
WFI32E01PE	1024	256	54	SMD	64	Y	1x1	20	35	7/4/4	2	1	1	1	Y	Y	N	Y	8	12	Y	Y	1	1	1	1	1	N	Y	Y	37	Y	Y	Y	PCB
WFI32E01PC	1024	256	54	SMD	64	Y	1x1	20	35	7/4/4	2	1	1	1	Y	Y	Y	Y	8	12	Y	Y	1	1	1	1	1	N	Y	Y	37	Y	Y	Y	PCB
WFI32E01UE	1024	256	54	SMD	64	Y	1x1	20	35	7/4/4	2	1	1	1	Y	Y	N	Y	8	12	Y	Y	1	1	1	1	1	N	Y	Y	37	Y	Y	Y	U.FL
WFI32E01UC	1024	256	54	SMD	64	Y	1x1	20	35	7/4/4	2	1	1	1	Y	Y	Y	Y	8	12	Y	Y	1	1	1	1	1	N	Y	Y	37	Y	Y	Y	U.FL

TABLE 3: PIN NAMES FOR 132-PIN PIC32MZ1025W104 SoC

132-PIN DQFN (TOP AND BOTTOM VIEW)

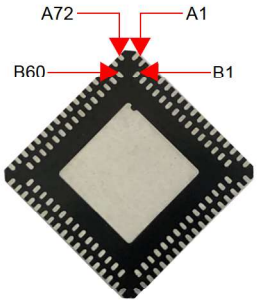

SoC Pin Number	SoC Pin Name(1,2)	SoC Pin Number	SoC Pin Name(1,2)
A1	NC	A36	NC
A2	PMU_VSENSE	A37	NC
A3	VDD33	A38	NC
A4	CVDT13/ETXD0/RPC15/IOCC15/RC15	A39	RXR_IN2
A5	CVDT15/EMDIO/RPK13/IOCK13/RK13	A40	RXR_RIQ_VDD15
A6	CVDT14/ERXDV/RPK12/IOCK12/RK12	A41	NC
A7	NC	A42	TXR_UMX_VDD15
A8	VDD15	A43	TXR_LPA_VOUT
A9	$\overline{SQICS1}$/CVDT18/RPC0/IOCC0/RC0	A44	RF_FE_3/RPK0/IOCK0/RK0
A10	SQID2/CVDT20/RPC2/IOCC2/RC2	A45	RF_FE_1/AN19/CVD19/CVDR19/RPK2/IOCK2/RK2
A11	VDD33	A46	VDD33
A12	SQICLK/CVDT23/RPC5/IOCC5/RC5	A47	SCK2/RPA11/IOCA11/RA11
A13	SDI1/RPC7/IOCC7/RC7	A48	AN15/ANN1/CVD15/CVDR15/RPA13/IOCA13/RA13
A14	$\overline{SS1}$/$\overline{CS1}$/FSYNC1/RPA1/IOCA1/RA1	A49	TRD0/AN13/CVD13/CVDR13/RPA15/IOCA15/RA15
A15	SCL2/RPA2/IOCA2/RA2	A50	TRD1/AN12/CVD12/CVDR12/RPB14/IOCB14/RB14
A16	SCL1/RPA4/IOCA4/RA4	A51	TRD3/ANA0/RPB12/IOCB12/RB12
A17	NC	A52	AN10/CVD10/CVDR10/LVDIN/RPB10/IOCB10/RB10
A18	NC	A53	NC
A19	NC	A54	NC
A20	NC	A55	NC
A21	U1RTSn/U1BCLK/IOCA7/RA7	A56	TDI/PGED4/AN9/CVD9/CVDR9/RPB9/IOCB9/RB9
A22	U1TX/IOCA9/RA9	A57	TDO/AN7/CVD7/CVDR7/CVDT0/RPB7/IOCB7/RB7
A23	$\overline{MCLR}$	A58	SOSCO/PK15(6)
A24	BT_PRIO/RPK6/IOCK6/RK6	A59	SOSCI/PB15(6)
A25	VDD33	A60	VBAT
A26	RF_FE_8/RPK9/IOCK9/RK9	A61	PGEC1/AN3/CVD3/CVDR3/CVDT4/USBOEN/RPB3/IOCB3/RB3
A27	RF_FE_5/RPK11/IOCK11/RK11	A62	AN1/CVD1/CVDR1/CVDT6/ETH_EXCLK_OUT/VBUSON/RPB1/IOCB1/RB1
A28	AFE_VDD15	A63	D-
A29	XTAL_IN	A64	D+
A30	XTAL_OUT	A65	VBUS
A31	NC	A66	VDD15
A32	SYN_SD_VDD15	A67	VDD33
A33	SYN_VCO_VDD15	A68	CVDT9/ERXD0/RPC11/IOCC11/RC11
A34	IOVDD_RF	A69	CVDT11/ETXEN/RPC13/IOCC13/RC13
A35	NC	A70	VPMU_VDDP

Note 1: The RPn pins can be used by re-mappable peripherals. Refer to **Section 13.4 "Peripheral Pin Select (PPS)"** for details.
2: Every I/O port pin (RAx-RKx) can be used as a change notification pin (CNAx-CNKx). See **13.0 "I/O Ports"** for more information.
3: Shaded pins are 5V tolerant.
4: Do not use Buck/MLDO output to drive any other device.
5: A58 and A59 pins can be configured as GPI as an alternate function.
6: Exact connection for each pin is available in the reference design package. Contact the Microchip Sales/Support Team for the package.

 © 2020 Microchip Technology Inc.

TABLE 3: PIN NAMES FOR 132-PIN PIC32MZ1025W104 SoC

132-PIN DQFN (TOP AND BOTTOM VIEW)

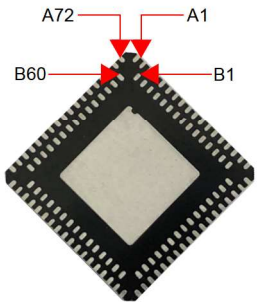

SoC Pin Number	SoC Pin Name(1,2)		SoC Pin Number	SoC Pin Name(1,2)
A71	BUK_BK_LX		B30	NC
A72	NC		B31	MBS_EXTRA_48K
B1	PMU_VDDIO/VPMU_VDDC		B32	RXR_FE2_VDD15
B2	CVDT12/ETXD1/RPC14/IOCC14/RC14		B33	RXR_FE1_VDD15
B3	VDD33		B34	BB_VDD15
B4	CVDT16/EMDC/RPK14/IOCK14/RK14		B35	NC
B5	CVDT7/ERXERR/RPC9/IOCC9/RC9		B36	TXR_LPA_VDD15
B6	SQICS0/CVDT17/RPA0/IOCA0/RA0		B37	RF_FE_4/RPK1/IOCK1/RK1
B7	NC		B38	RF_FE_2/AN18/CVD18/CVDR18/RPK3/IOCK3/RK3
B8	SQID3/CVDT19/RPC1/IOCC1/RC1		B39	AN17/CVD17/CVDR17/CTRTM0/INT0/RPA10/IOCA10/RA10
B9	SQID1/CVDT21/RPC3/IOCC3/RC3		B40	AN16/CVD16/CVDR16/CTRTM1/RPA12/IOCA12/RA12
B10	SQID0/CVDT22/RPC4/IOCC4/RC4		B41	TRCLK/AN14/ANN0/CVD14/CVDR14/RPA14/IOCA14/RA14
B11	SCK1/RPC6/IOCC6/RC6		B42	AVDD
B12	SDO1/RPC8/IOCC8/RC8		B43	TRD2/AN11/CVD11/CVDR11/RPB13/IOCB13/RB13
B13	VDD33		B44	ANB0/RPB11/IOCB11/RB11
B14	SDA2/RPA3/IOCA3/RA3		B45	AVSS
B15	SDA1/RPA5/IOCA5/RA5		B46	TCK/PGEC4/AN8/CVD8/CVDR8/RPB8/IOCB8/RB8
B16	U1CTSn/IOCA6/RA6		B47	TMS/AN6/CVD6/CVDR6/CVDT1/RPB6/IOCB6/RB6
B17	U1RX/IOCA8/RA8		B48	VDD33
B18	BT_CLK_OUT/RPK4/IOCK4/RK4		B49	PGED2/AN5/CVD5/CVDR5/CVDT2/RTCC/RPB5/IOCB5/RB5
B19	WLAN_ACTIVE/RPK5/IOCK5/RK5		B50	PGEC2/AN4/CVD4/CVDR4/CVDT3/RPB4/IOCB4/RB4
B20	BT_ACTIVE/RPK7/IOCK7/RK7		B51	PGED1/AN2/CVD2/CVDR2/CVDT5/USBID/RPB2/IOCB2/RB2
B21	RF_FE_7/RPK8/IOCK8/RK8		B52	AN0/RPB0/IOCB0/RB0
B22	RF_FE_6/RPK10/IOCK10/RK10		B53	NC
B23	SPI_VDD15		B54	VUSB3V3
B24	XTAL_VDD15		B55	NC
B25	NC		B56	NC
B26	IOVDD_RF		B57	CVDT8/ERXD1/RPC10/IOCC10/RC10
B27	IN_TSSI		B58	CVDT10/ETH_CLK_OUT/ERXCLK/RPC12/IOCC12/RC12
B28	SYN_PLL_VDD15		B59	BUK_MLDO_OUT(4)
B29	NC		B60	VPMU_VDDP

Note 1: The RPn pins can be used by re-mappable peripherals. Refer to **Section 13.4 "Peripheral Pin Select (PPS)"** for details.
2: Every I/O port pin (RAx-RKx) can be used as a change notification pin (CNAx-CNKx). See **13.0 "I/O Ports"** for more information.
3: Shaded pins are 5V tolerant.
4: Do not use Buck/MLDO output to drive any other device.
5: A58 and A59 pins can be configured as GPI as an alternate function.
6: Exact connection for each pin is available in the reference design package. Contact the Microchip Sales/Support Team for the package.

Table of Contents

Introduction 3
1.0 Ordering Information 11
2.0 PIC32MZ1025W104 SoC Description 13
3.0 WFI32E01 Module Description 27
4.0 CPU 45
5.0 Flash Program Memory 57
6.0 Memory Organization 71
7.0 Resets 97
8.0 CPU Exceptions and Interrupt Controller 105
9.0 Prefetch Module 133
10.0 Direct Memory Access (DMA) Controller 141
11.0 Oscillator Configuration 165
12.0 Full-Speed USB On-The-Go (OTG) 187
13.0 I/O Ports 213
14.0 Peripheral Trigger Generator (PTG) 249
15.0 Timer1 269
16.0 Timer2/3, Timer4/5, and Timer6/7 273
17.0 Deadman Timer (DMT) 279
18.0 Watchdog Timer (WDT) 287
19.0 Input Capture 289
20.0 Output Compare 293
21.0 Serial Peripheral Interface (SPI) and Inter-IC Sound (I^2S) 297
22.0 Serial Quad Interface (SQI) 307
23.0 Inter-Integrated Circuit (I^2C) 329
24.0 UART 339
25.0 Real-Time Clock and Calendar (RTCC) 347
26.0 Asymmetric Crypto Engine 357
27.0 Symmetric Crypto Engine 369
28.0 True Random Number Generator (TRNG) 393
29.0 12-bit High-Speed Successive Approximation Register (SAR) ADC 399
30.0 Controller Area Network (CAN) 443
31.0 Controller Area Network-Flexible Data-Rate (CAN-FD) Module 471
32.0 Wi-Fi Controller 521
33.0 Ethernet Controller 523
34.0 Enhanced Capacitive Voltage Divider (CVD) Controller 563
35.0 Power Management Unit (PMU) 585
36.0 Power-Saving Features 601
37.0 Special Features 613
38.0 Instruction Set 629
39.0 Development Support 631
40.0 Electrical Specifications 635
41.0 Packaging Information 675
Appendix A: Regulatory Approvals 683
Appendix B: Document Revision History 689
The Microchip Web Site 691
Customer Change Notification Service 691
Customer Support 691
Worldwide Sales and Service 695

 © 2020 Microchip Technology Inc.

TO OUR VALUED CUSTOMERS

It is our intention to provide our valued customers with the best documentation possible to ensure successful use of your Microchip products. To this end, we will continue to improve our publications to better suit your needs. Our publications will be refined and enhanced as new volumes and updates are introduced.

If you have any questions or comments regarding this publication, please contact the Marketing Communications Department via E-mail at **docerrors@microchip.com**. We welcome your feedback.

Most Current Data Sheet

To obtain the most up-to-date version of this data sheet, please register at our Worldwide Web site at:

http://www.microchip.com

You can determine the version of a data sheet by examining its literature number found on the bottom outside corner of any page. The last character of the literature number is the version number, (e.g., DS30000000A is version A of document DS30000000).

Errata

An errata sheet, describing minor operational differences from the data sheet and recommended workarounds, may exist for current devices. As device/documentation issues become known to us, we will publish an errata sheet. The errata will specify the revision of silicon and revision of document to which it applies.

To determine if an errata sheet exists for a particular device, please check with one of the following:

- Microchip's Worldwide Web site; **http://www.microchip.com**
- Your local Microchip sales office (see last page)

When contacting a sales office, please specify which device, revision of silicon and data sheet (include literature number) you are using.

Customer Notification System

Register on our web site at **www.microchip.com** to receive the most current information on all of our products.

Referenced Sources

This device data sheet is based on the following individual sections of the *"PIC32 Family Reference Manual"* and *"PIC32MZ W1 Family Reference Manual"*. These documents should be considered as the general reference for the operation of a particular module or device feature.

Note: To access the following documents, browse the documentation section of the Microchip website (www.microchip.com).

- **Section 5. "Flash Program Memory with Support for Live Update"** (DS60001640)
- **Section 6. "Memory Organization and Permissions"** (DS60001641)
- **Section 7. "Resets"** (DS60001118)
- **Section 8. "Interrupts"** (DS60001108)
- **Section 9. "Prefetch Module for Devices with L1 CPU Cache"** (DS60001649)
- **Section 9. "Watchdog, Deadman, and Power-up Timers"** (DS60001114)
- **Section 10. "Power-Saving Modes"** (DS60001130)
- **Section 12. "I/O Ports"** (DS60001120)
- **Section 14. "Timers"** (DS60001105)
- **Section 15. "Input Capture"** (DS60001122)
- **Section 16. "Output Compare"** (DS60001111)
- **Section 21. "UART"** (DS60001107)
- **Section 22. "12-bit High-Speed Successive Approximation Register (SAR) Analog-to-Digital Converter (ADC)"** (DS60001344)
- **Section 23. "Serial Peripheral Interface (SPI)"** (DS60001106)
- **Section 24. "Inter-Integrated Circuit (I^2C)"** (DS60001116)
- **Section 27. "USB On-The-Go (OTG)"** (DS61126)
- **Section 29. "Real-Time Clock and Calendar (RTCC)"** (DS60001125)
- **Section 31. "DMA Controller"** (DS60001117)
- **Section 32. "Configuration"** (DS60001124)
- **Section 33. "Programming and Diagnostics"** (DS60001129)
- **Section 34. "Controller Area Network (CAN)"** (DS60001154)
- **Section 35. "Ethernet Controller"** (DS60001155)

- **Section 42. “Oscillators with Enhanced PLL”** (DS60001250)
- **Section 46. “Serial Quad Interface (SQI)”** (DS60001244)
- **Section 49. “Crypto Engine and Random Number Generator (RNG)”** (DS60001246)
- **Section 50. “CPU for Devices with MIPS32® microAptiv™ and M-Class Cores”** (DS60001192)
- **Section 56. “Controller Area Network with Flexible Data-rate (CAN FD)”** (DS60001549)

 © 2020 Microchip Technology Inc.

1.0 ORDERING INFORMATION

This chapter provides the ordering information of the PIC32MZ1025W104 SoC and WFI32E01 module.

1.1 PIC32MZ1025W104 SoC Ordering Information

The following table describes the ordering information of the PIC32MZ1025W104 SoC.

TABLE 1-1: PIC32MZ1025W104 SOC ORDERING DETAILS

SoC Name	Pin and Package	Description	Ordering Code
PIC32MZ1025W104	132-pin and DQFN (10x10x0.9 mm)	32-bit MCU with Network Connectivity and Security Accelerator	PIC32MZ1025W104132-V/NX

The following figure illustrates the details of PIC32MZ1025W104 SoC ordering information.

FIGURE 1-1: PIC32MZ1025W104 SOC ORDERING INFORMATION

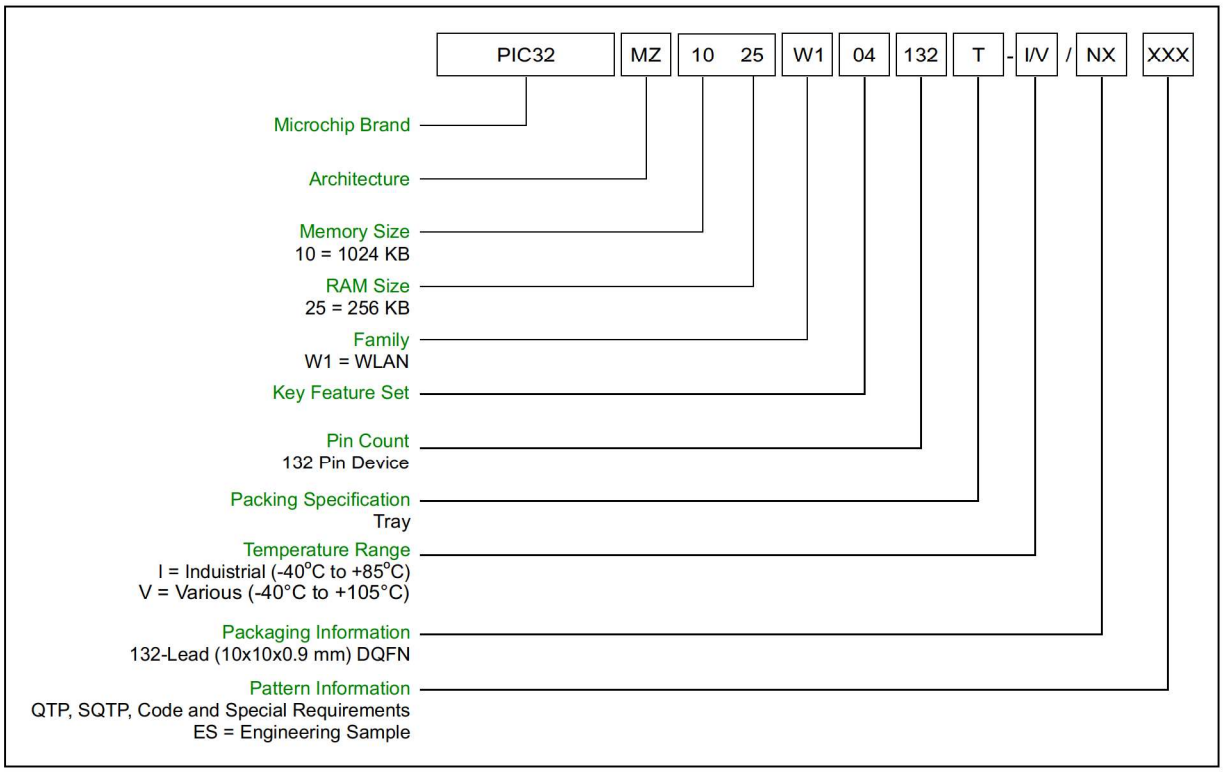

1.2 WFI32E01 Module Ordering Information

The following table describes the ordering information of the WFI32E01 module.

TABLE 1-2: WFI32E01 MODULE ORDERING INFORMATION

Model No.	Module SoC	Description	Regulatory Certification	Ordering Code
WFI32E01PE	PIC32MZ1025W104132-V/NX	WFI32E01 module with PCB antenna	FCC, ISED, CE	WFI32E01PE - I
WFI32E01PC		WFI32E01 module with PCB antenna and Trust&GO	FCC, ISED, CE	WFI32E01PC - I
WFI32E01UE		WFI32E01 module with U.FL connector for external antenna	FCC, ISED, CE	WFI32E01UE - I
WFI32E01UC		WFI32E01 module with U.FL connector for external antenna and Trust&GO	FCC, ISED, CE	WFI32E01UC - I

The following figure illustrates the details of the WFI32E01 module ordering information.

FIGURE 1-2: WFI32E01 MODULE ORDERING INFORMATION

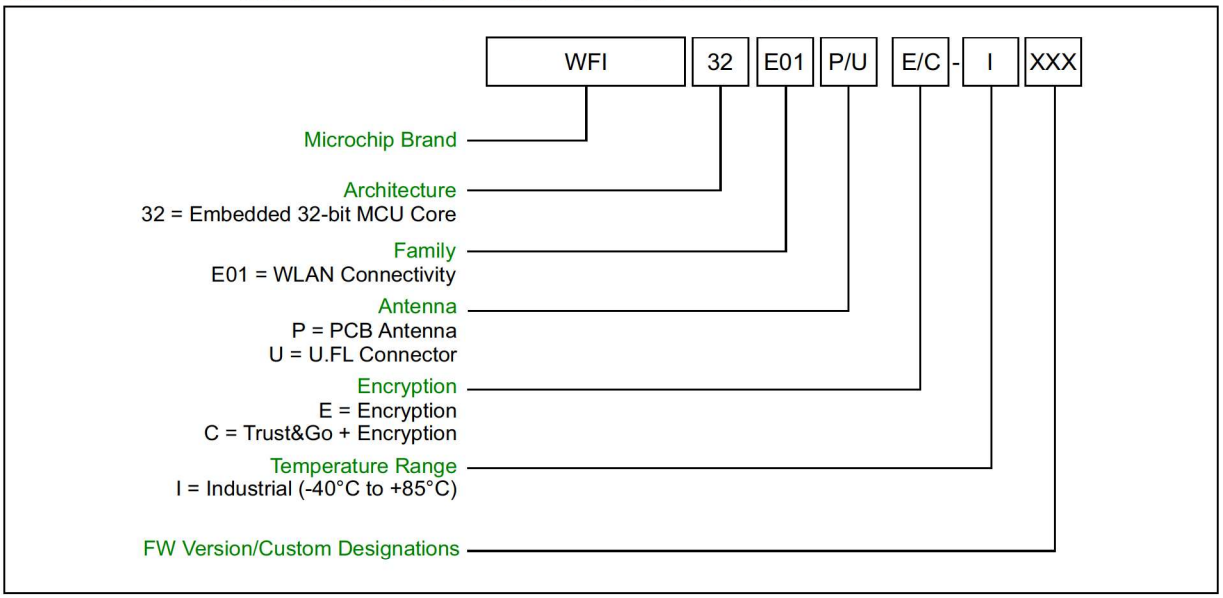

 © 2020 Microchip Technology Inc.

2.0 PIC32MZ1025W104 SOC DESCRIPTION

Note: This data sheet summarizes the features of the PIC32MZ1025W104 SoC. It is not intended to be a comprehensive reference source. To complement the information in this data sheet, refer to the *"PIC32 Family Reference Manual"*, which is available from the Microchip website (www.microchip.com/PIC32).

This chapter contains device-specific information for PIC32MZ1025W104 SoC.

2.1 Block Diagram

The following figure illustrates the block diagram of the core and peripheral modules in the PIC32MZ1025W104 SoC.

FIGURE 2-1: PIC32MZ1025W104 SoC BLOCK DIAGRAM

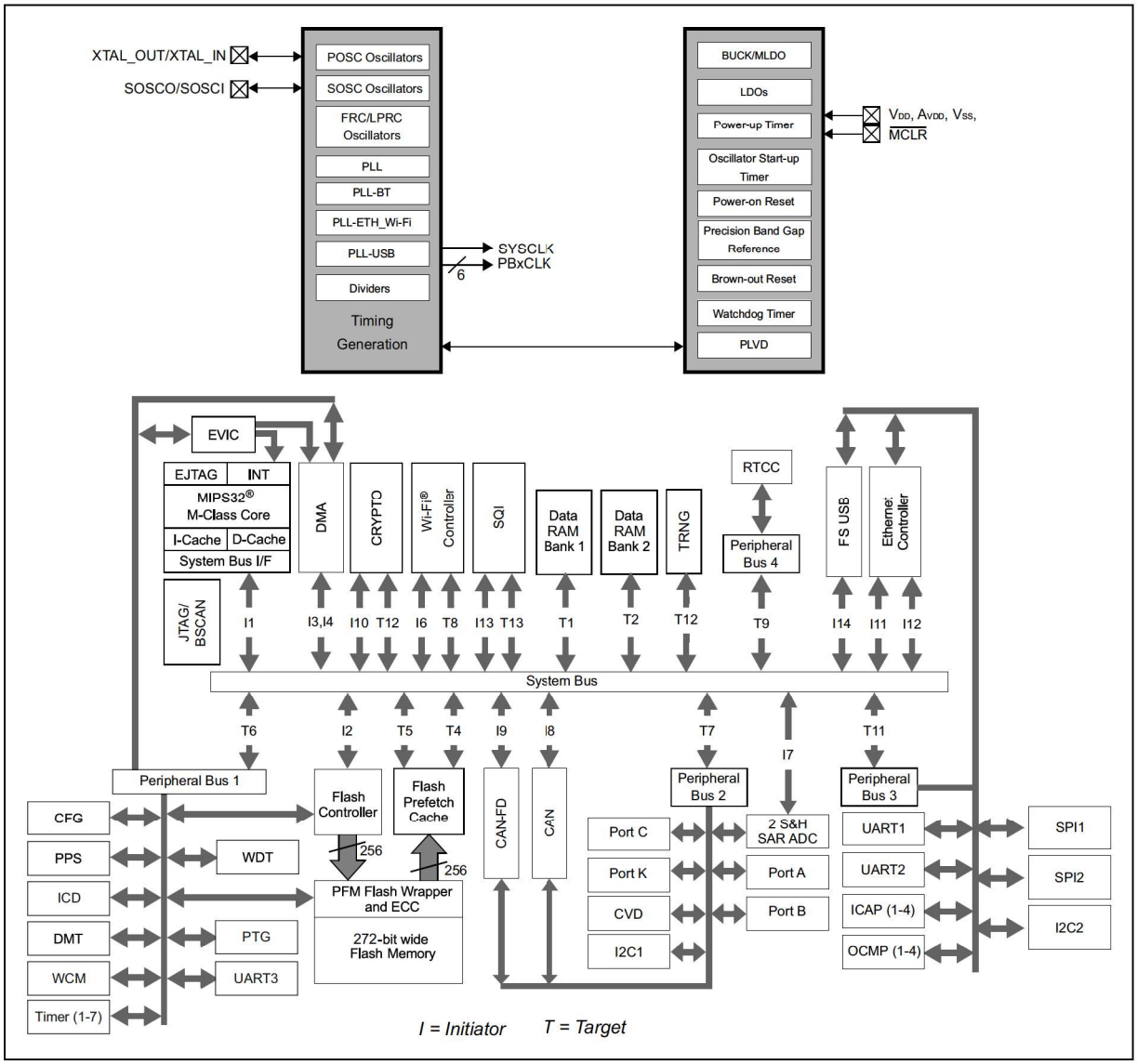

2.2 Function-wise Pinout Description

The following tables provide the function-wise pinout descriptions for the PIC32MZ1025W104 SoC and WFI32E01 module pins.

TABLE 2-1: ADC PINOUT DESCRIPTION

PIC32MZ1025W104		WFI32E01		Pin Type	Buffer Type	Description
Pin Name	Pin Number	Pin Name	Pin Number			
AN0	B52	—	—	I	Analog	A/D Analog Input Channels
AN1	A62	AN1	3	I	Analog	
AN2	B51	AN2	7	I	Analog	
AN3	A61	—	—	I	Analog	
AN4	B50	AN4	2	I	Analog	
AN5	B49	AN5	52	I	Analog	
AN6	B47	AN6	46	I	Analog	
AN7	A57	AN7	49	I	Analog	
AN8	B46	AN8	47	I	Analog	
AN9	A56	AN9	48	I	Analog	
AN10	A52	—	—	I	Analog	
AN11	B43	—	—	I	Analog	
AN12	A50	—	—	I	Analog	
AN13	A49	—	—	I	Analog	
AN14	B41	AN14	44	I	Analog	
AN15	A48	AN15	42	I	Analog	
AN16	B40	—	—	I	Analog	
AN17	B39	AN17	41	I	Analog	
AN18	B38	—	—	I	Analog	
AN19	A45	—	—	I	Analog	
ANA0	A51	ANA0	45	I	Analog	
ANB0	B44	—	—	I	Analog	A/D Negative Analog Input Channels
ANN0	B41	ANN0	44	I	Analog	
ANN1	A48	ANN1	42	I	Analog	

Legend: Analog = Analog input I = Input

TABLE 2-2: OSCILLATOR PINOUT DESCRIPTION

PIC32MZ1025W104		WFI32E01		Pin Type	Buffer Type	Description
Pin Name	Pin Number	Pin Name	Pin Number			
XTAL_IN	A29	—	—	I	—	40 MHz Primary Oscillator Crystal Input
XTAL_OUT	A30	—	—	O	—	40 MHz Primary Oscillator Crystal Output
SOSCI	A59	SOSCI	53	I	—	32.768 kHz Secondary Oscillator Crystal Input
SOSCO	A58	SOSCO	54	O	—	32.768 kHz Secondary Oscillator Crystal Output
REFI	PPS	REFI	PPS	I	—	Reference Clock Generator Input
REFO1	PPS	REFO1	PPS	O	—	Reference Clock Generator Outputs 1-4
REFO2	PPS	REFO2	PPS	O	—	
REFO3	PPS	REFO3	PPS	O	—	
REFO4	PPS	REFO4	PPS	O	—	

Legend: O = Output I = Input PPS = Peripheral Pin Select

 © 2020 Microchip Technology Inc.

TABLE 2-3: IC1 THROUGH IC4 PINOUT DESCRIPTION

PIC32MZ1025W104		WFI32E01		Pin Type	Buffer Type	Description
Pin Name	Pin Number	Pin Name	Pin Number			
Input Capture						
IC1	PPS	IC1	PPS	I	ST	Input Capture Inputs 1-4
IC2	PPS	IC2	PPS	I	ST	
IC3	PPS	IC3	PPS	I	ST	
IC4	PPS	IC4	PPS	I	ST	

Legend: ST = Schmitt Trigger input with CMOS levels I = Input PPS = Peripheral Pin Select

TABLE 2-4: OC1 THROUGH OC4 PINOUT DESCRIPTION

PIC32MZ1025W104		WFI32E01		Pin Type	Buffer Type	Description
Pin Name	Pin Number	Pin Name	Pin Number			
Output Compare						
OC1	PPS	OC1	PPS	O	-	Output Compare Outputs 1-4
OC2	PPS	OC2	PPS	O	-	
OC3	PPS	OC3	PPS	O	-	
OC4	PPS	OC4	PPS	O	-	
OCFA	PPS	OCFA	PPS	I	ST	Output Compare Fault A Input
OCFB	PPS	OCFB	PPS	I	ST	Output Compare Fault B Input
OCFC	PPS	OCFC	PPS	I	ST	Output Compare Fault C Input
OCFD	PPS	OCFD	PPS	I	ST	Output Compare Fault D Input

Legend: ST = Schmitt Trigger input with CMOS levels O = Output I = Input
PPS = Peripheral Pin Select

TABLE 2-5: EXTERNAL INTERRUPTS PINOUT DESCRIPTION

PIC32MZ1025W104		WFI32E01		Pin Type	Buffer Type	Description
Pin Name	Pin Number	Pin Name	Pin Number			
External Interrupts						
INT0	B39	INT0	41	I	ST	External Interrupt 0
INT1	PPS	INT1	PPS	I	ST	External Interrupt 1
INT2	PPS	INT2	PPS	I	ST	External Interrupt 2
INT3	PPS	INT3	PPS	I	ST	External Interrupt 3
INT4	PPS	INT4	PPS	I	ST	External Interrupt 4

Legend: ST = Schmitt Trigger input with CMOS levels I = Input PPS = Peripheral Pin Select

TABLE 2-6: PORTA THROUGH PORTC AND PORTK PINOUT DESCRIPTION

PIC32MZ1025W104		WFI32E01		Pin Type	Buffer Type	Description
Pin Name	Pin Number	Pin Name	Pin Number			
PORTA						
RA0	B6	—	—	I/O	DIG/ST	PORTA Digital I/O
RA1	A14	RA1	20	I/O	DIG/ST	
RA2	A15	—	—	I/O	DIG/ST	
RA3	B14	—	—	I/O	DIG/ST	
RA4	A16	RA4	33	I/O	DIG/ST	
RA5	B15	RA5	32	I/O	DIG/ST	
RA6	B16	—	—	I/O	DIG/ST	
RA7	A21	—	—	I/O	DIG/ST	
RA8	B17	—	—	I/O	DIG/ST	
RA9	A22	—	—	I/O	DIG/ST	
RA10	B39	RA10	41	I/O	DIG/ST	
RA11	A47	RA11	43	I/O	DIG/ST	
RA12	B40	—	—	I/O	DIG/ST	
RA13	A48	RA13	42	I/O	DIG/ST	
RA14	B41	RA14	44	I/O	DIG/ST	
RA15	A49	—	—	I/O	DIG/ST	
PORTB						
RB0	B52	—	—	I/O	DIG/ST	PORTB Digital I/O
RB1	A62	RB1	3	I/O	DIG/ST	
RB2	B51	RB2	7	I/O	DIG/ST	
RB3	A61	—	—	I/O	DIG/ST	
RB4	B50	RB4	2	I/O	DIG/ST	
RB5	B49	RB5	52	I/O	DIG/ST	
RB6	B47	RB6	46	I/O	DIG/ST	
RB7	A57	RB7	49	I/O	DIG/ST	
RB8	B46	RB8	47	I/O	DIG/ST	
RB9	A56	RB9	48	I/O	DIG/ST	
RB10	A52	—	—	I/O	DIG/ST	
RB11	B44	—	—	I/O	DIG/ST	
RB12	A51	RB12	45	I/O	DIG/ST	
RB13	B43	—	—	I/O	DIG/ST	
RB14	A50	—	—	I/O	DIG/ST	
PB15	A59	PB15	53	I	DIG/ST	

Legend: DIG = Digital input ST = Schmitt Trigger input with CMOS levels O = Output I = Input

 © 2020 Microchip Technology Inc.

TABLE 2-6: PORTA THROUGH PORTC AND PORTK PINOUT DESCRIPTION (CONTINUED)

PIC32MZ1025W104		WFI32E01		Pin Type	Buffer Type	Description
Pin Name	**Pin Number**	**Pin Name**	**Pin Number**			
PORTC						
RC0	A9	—	—	I/O	DIG/ST	PORTC Digital I/O
RC1	B8	—	—	I/O	DIG/ST	
RC2	A10	—	—	I/O	DIG/ST	
RC3	B9	—	—	I/O	DIG/ST	
RC4	B10	—	—	I/O	DIG/ST	
RC5	A12	—	—	I/O	DIG/ST	
RC6	B11	RC6	21	I/O	DIG/ST	
RC7	A13	RC7	19	I/O	DIG/ST	
RC8	B12	RC8	23	I/O	DIG/ST	
RC9	B5	RC9	18	I/O	DIG/ST	
RC10	B57	RC10	10	I/O	DIG/ST	
RC11	A68	RC11	9	I/O	DIG/ST	
RC12	B58	RC12	12	I/O	DIG/ST	
RC13	A69	RC13	8	I/O	DIG/ST	
RC14	B2	RC14	13	I/O	DIG/ST	
RC15	A4	RC15	14	I/O	DIG/ST	
PORTK						
RK0	A44	—	—	I/O	DIG/ST	PORTK Digital I/O
RK1	B37	RK1	34	I/O	DIG/ST	
RK2	A45	—	—	I/O	DIG/ST	
RK3	B38	RK3	35	I/O	DIG/ST	
RK4	B18	RK4	24	I/O	DIG/ST	
RK5	B19	RK5	27	I/O	DIG/ST	
RK6	A24	RK6	25	I/O	DIG/ST	
RK7	B20	RK7	28	I/O	DIG/ST	
RK8	B21	—	—	I/O	DIG/ST	
RK9	A26	—	—	I/O	DIG/ST	
RK10	B22	—	—	I/O	DIG/ST	
RK11	A27	—	—	I/O	DIG/ST	
RK12	A6	RK12	15	I/O	DIG/ST	
RK13	A5	RK13	16	I/O	DIG/ST	
RK14	B4	RK14	17	I/O	DIG/ST	
PK15	A58	PK15	54	I	DIG/ST	

Legend: DIG = Digital input ST = Schmitt Trigger input with CMOS levels O = Output I = Input

TABLE 2-7: TIMER1 THROUGH TIMER7 AND RTCC PINOUT DESCRIPTION

PIC32MZ1025W104		WFI32E01		Pin Type	Buffer Type	Description
Pin Name	Pin Number	Pin Name	Pin Number			
Timer1 through Timer7						
T1CK	PPS	T1CK	PPS	I	ST	Timer1 External Clock Input
T2CK	PPS	T2CK	PPS	I	ST	Timer2 External Clock Input
T3CK	PPS	T3CK	PPS	I	ST	Timer3 External Clock Input
T4CK	PPS	T4CK	PPS	I	ST	Timer4 External Clock Input
T5CK	PPS	T5CK	PPS	I	ST	Timer5 External Clock Input
T6CK	PPS	T6CK	PPS	I	ST	Timer6 External Clock Input
T7CK	PPS	T7CK	PPS	I	ST	Timer7 External Clock Input
Real-Time Clock and Calendar						
RTCC	B49	RTCC	52	O	—	RTCC Output Clock

Legend: ST = Schmitt Trigger input with CMOS levels O = Output I = Input
PPS = Peripheral Pin Select

TABLE 2-8: UART1 (DEDICATED) PINOUT DESCRIPTION

PIC32MZ1025W104		WFI32E01		Pin Type	Buffer Type	Description
Pin Name	Pin Number	Pin Name	Pin Number			
Universal Asynchronous Receiver Transmitter 1						
U1CTSn	B16	—	—	I	ST	UART1 Clear to Send (CTS) Input
U1RTSn/U1BCLK	A21	—	—	O	DIG	UART1 Request to Send (RTS) Output/ UART1 Baud Clock
U1RX	B17	U1RX	30	I	ST	UART1 Receive
U1TX	A21	U1TX	29	O	DIG	UART1 Transmit

Legend: DIG = Digital input ST = Schmitt Trigger input with CMOS levels O = Output I = Input

TABLE 2-9: UART1 THROUGH UART3 PINOUT DESCRIPTION

PIC32MZ1025W104		WFI32E01		Pin Type	Buffer Type	Description
Pin Name	Pin Number	Pin Name	Pin Number			
Universal Asynchronous Receiver Transmitter 1						
U1CTSn	PPS	U1CTSn	PPS	I	ST	UART1 CTS Input
U1RTSn/U1BCLK	PPS	U1RTSn	PPS	O	DIG	UART1 RTS Output/UART1 Baud Clock
U1RX	PPS	U1RX	PPS	I	ST	UART1 Receive
U1TX	PPS	U1TX	PPS	O	DIG	UART1 Transmit
Universal Asynchronous Receiver Transmitter 2						
U2CTSn	PPS	U2CTSn	PPS	I	ST	UART2 CTS Input
U2RTSn/U2BCLK	PPS	U2RTSn	PPS	O	DIG	UART2 RTS Output/UART2 Baud Clock
U2RX	PPS	U2RX	PPS	I	ST	UART2 Receive
U2TX	PPS	U2TX	PPS	O	DIG	UART2 Transmit
Universal Asynchronous Receiver Transmitter 3						
U3CTSn	PPS	U3CTSn	PPS	I	ST	UART3 CTS Input
U3RTSn/U3BCLK	PPS	U3RTSn	PPS	O	DIG	UART3 RTS Output/UART3 Baud Clock
U3RX	PPS	U3RX	PPS	I	ST	UART3 Receive
U3TX	PPS	U3TX	PPS	O	DIG	UART3 Transmit

Legend: DIG = Digital input ST = Schmitt Trigger input with CMOS levels O = Output I = Input
PPS = Peripheral Pin Select

 © 2020 Microchip Technology Inc.

TABLE 2-10: SPI1 (DEDICATED) PINOUT DESCRIPTION

PIC32MZ1025W104		WFI32E01		Pin Type	Buffer Type	Description
Pin Name	Pin Number	Pin Name	Pin Number			
Serial Peripheral Interface 1						
SCK1	B11	SCK1	21	I/O	DIG/ST	SPI1 Synchronous Serial Clock Input/Output
SDI1	A13	SDI1	19	I	ST	SPI1 Data In
SDO1	B12	SDO1	23	O	DIG	SPI1 Data Out
$\overline{SS1}$/$\overline{CS1}$	A14	$\overline{SS1}$/$\overline{CS1}$	20	I/O	DIG/ST	SPI1 Slave Select/Chip Select/Frame Sync (active-low)

Legend: DIG = Digital input ST = Schmitt Trigger input with CMOS levels O = Output I = Input

TABLE 2-11: SPI1 THROUGH SPI 2 PINOUT DESCRIPTION

PIC32MZ1025W104		WFI32E01		Pin Type	Buffer Type	Description
Pin Name	Pin Number	Pin Name	Pin Number			
Serial Peripheral Interface 1						
SCK1	B11	SCK1	21	I/O	DIG/ST	SPI1 Synchronous Serial Clock Input/Output
SDI1	PPS	SDI1	PPS	I	ST	SPI1 Data In
SDO1	PPS	SDO1	PPS	O	DIG	SPI1 Data Out
$\overline{SS1}$/$\overline{CS1}$	PPS	$\overline{SS1}$/$\overline{CS1}$	PPS	I/O	DIG/ST	SPI1 Slave Select/Chip Select/Frame Sync (active-low)
Serial Peripheral Interface 2						
SCK2	A47	SCK2	43	I/O	DIG/ST	SPI2 Synchronous Serial Clock Input/Output
SDI2	PPS	SDI2	PPS	I	ST	SPI2 Data In
SDO2	PPS	SDO2	PPS	O	DIG	SPI2 Data Out
$\overline{SS2}$/$\overline{CS2}$	PPS	$\overline{SS2}$/$\overline{CS2}$	PPS	I/O	DIG/ST	SPI2 Slave Select/Chip Select/Frame Sync (active-low)

Legend: DIG = Digital input ST = Schmitt Trigger input with CMOS levels O = Output I = Input
PPS = Peripheral Pin Select

TABLE 2-12: I2C1 THROUGH I2C2 PINOUT DESCRIPTION

PIC32MZ1025W104		WFI32E01		Pin Type	Buffer Type	Description
Pin Name	Pin Number	Pin Name	Pin Number			
Inter-Integrated Circuit 1						
SCL1	A16	SCL1	33	I/O	DIG/I2C/SMB	I2C1 Synchronous Serial Clock Input/Output
SDA1	B15	SDA1	32	I/O	DIG/I2C/SMB	I2C1 Data Input/Output
Inter-Integrated Circuit 2						
SCL2	A15	—	—	I/O	DIG/I2C/SMB	I2C2 Synchronous Serial Clock Input/Output
SDA2	B14	—	—	I/O	DIG/I2C/SMB	I2C2 Data Input/Output

Legend: DIG = Digital input O = Output I = Input

TABLE 2-13: USB PINOUT DESCRIPTION

PIC32MZ1025W104		WFI32E01		Pin Type	Buffer Type	Description
Pin Name	Pin Number	Pin Name	Pin Number			
VBUS	A65	VBUS	4	I	—	USB VBUS Input Signal (5V); can be left open when USB not in use
VUSB3V3	B54	—	—	P	—	• USB Internal Transceiver Supply Voltage (3.3V). If the USB is not used, this pin can be connected to VSS. When connected to VSS, the shared pin functions on USBID will not be available
D+	A64	USB D+	6	I/O	—	USB D+
D-	A63	USB D-	5	I/O	—	USB D-
USBID	B51	USBID	7	I	ST	USB OTG ID input
USBOEN	A61	—	—	O	DIG	USB transceiver interface output enable state
VBUSON	A62	VBUSON	3	O	DIG	USB ON signal for external VBUS source

Legend: DIG = Digital input ST = Schmitt Trigger input with CMOS levels O = Output I = Input
P = Power

TABLE 2-14: CAN AND CAN-FD PINOUT DESCRIPTION

PIC32MZ1025W104		WFI32E01		Pin Type	Buffer Type	Description
Pin Name	Pin Number	Pin Name	Pin Number			
C1TX	PPS	C1TX	PPS	O	—	CAN1 Bus Transmit Pin
C1RX	PPS	C1RX	PPS	I	ST	CAN1 Bus Receive Pin
C2TX	PPS	C2TX	PPS	O	—	CAN2 Bus Transmit Pin
C2RX	PPS	C2RX	PPS	I	ST	CAN2 Bus Receive Pin

Legend: ST = Schmitt Trigger input with CMOS levels O = Output I = Input
PPS = Peripheral Pin Select

Note: The CAN1 bus supports only the CAN interface, and the CAN2 bus supports both the CAN and CAN-FD interfaces.

 © 2020 Microchip Technology Inc.

TABLE 2-15: ETHERNET RMII PINOUT DESCRIPTION

PIC32MZ1025W104		WFI32E01		Pin Type	Buffer Type	Description
Pin Name	Pin Number	Pin Name	Pin Number			
Ethernet RMII Interface						
ERXD0	A68	ERXD0	9	I	ST	Ethernet Receive Data 0
ERXD1	B57	ERXD1	10	I	ST	Ethernet Receive Data 1
ERXERR	B5	ERXERR	18	I	ST	Ethernet Receive Error
ERXDV	A6	ERXDV	15	I	ST	Ethernet Receive Data Valid
ETHCLKOUT	B58	ETH_CLK_OUT	12	I	ST	Ethernet Clock Output (50 MHz)
ETXD0	A4	ETXD0	14	O	DIG	Ethernet Transmit Data 0
ETXD1	B2	ETXD1	13	O	DIG	Ethernet Transmit Data 1
ETXEN	A69	ETXEN	8	O	DIG	Ethernet Transmit Enable
EMDC	B4	EMDC	17	O	DIG	Ethernet Management Data Clock
EMDIO	A5	EMDIO	16	I/O	ST/DIG	Ethernet Management Data

Legend: DIG = Digital input ST = Schmitt Trigger input with CMOS levels O = Output I = Input

TABLE 2-16: SQI1 PINOUT Description

PIC32MZ1025W104		WFI32E01		Pin Type	Buffer Type	Description
Pin Name	Pin Number	Pin Name	Pin Number			
SQICLK	A12	—	—	O	DIG/ST	SQI1 Clock
$\overline{\text{SQICS0}}$	B6	—	—	O	DIG	SQI Chip Select 0
$\overline{\text{SQICS1}}$	A9	—	—	O	DIG	SQI Chip Select 1
SQID0	B10	—	—	I/O	DIG/ST	SQI1 Data[0]
SQID1	B9	—	—	I/O	DIG/ST	SQI1 Data[1]
SQID2	A10	—	—	I/O	DIG/ST	SQI1 Data[2]
SQID3	B8	—	—	I/O	DIG/ST	SQI1 Data[3]

Legend: DIG = Digital input ST = Schmitt Trigger input with CMOS levels O = Output I = Input

TABLE 2-17: POWER, GROUND, AND VOLTAGE REFERENCE PINOUT DESCRIPTION

PIC32MZ1025W104		WFI32E01		Pin Type	Buffer Type	Description
Pin Name	**Pin Number**	**Pin Name**	**Pin Number**			
Power and Ground						
VPMU_VDDP	A70, B60	—	—	P	—	Input Supply Voltage (3.3V) to PMU
PMU_VDDIO/VPMU_VDDC	B1	—	—	P	—	Input Supply Voltage (3.3V) to PMU Core
VBAT	A60	—	—	P	—	Backup Battery Voltage and Should Be Connected to Input Supply Voltage (3.3V)
BUK_MDLO_OUT	B59	—	—	P	—	MLDO Output Voltage (1.5V), for Internal Usage only; Do Not Connect to Any External Circuit
BUK_BK_LX	A71	—	—	P	—	Buck Output to External LC Filter
PMU_VSENSE	A2	—	—	P	—	Feedback Voltage to PMU
VDD33	A3, A11, A25, A46, A67, B3, B13, B48	—	—	P	—	Input Supply Voltage (3.3V)
VUSB3V3	B54	—	—	P	—	USB Input Supply Voltage (3.3V)
AVDD33	B42	—	—	P	—	Analog Input Supply Voltage (3.3V)
AVSS	B45	—	—	P	—	Analog Ground
VDD15	A66, A8	—	—	P	—	Input Supply Voltage (1.5V) from PMU
IOVDD_RF	A34, B26	—	—	P	—	ESD Input Voltage (3.3V)
RXR_RIQ_VDD15	A40	—	—	P	—	
RXR_FE1_VDD15	B33	—	—	P	—	
RXR_FE2_VDD15	B32	—	—	P	—	
SYN_PLL_VDD15	B28	—	—	P	—	
SYN_SD_VDD15	A32	—	—	P	—	
SYN_VCO_VDD15	A33	—	—	P	—	
XTAL_VDD15	B24	—	—	P	—	
TXR_LPA_VDD15	B36	—	—	P	—	
TXR_UMX_VDD15	A42	—	—	P	—	
SPI_VDD15	B23	—	—	P	—	
BB_VDD15	B34	—	—	P	—	
AFE_VDD15	A28	—	—	P	—	RF Supply Voltage (1.5V) from PMU
Voltage Reference						
LVDIN	A52	—	—	I	Analog	Programmable Low-Voltage Detect Input
GNDDB	GND	—	—	P	—	—

Legend: P = Power Analog = Analog input I = Input

 © 2020 Microchip Technology Inc.

TABLE 2-18: JTAG, TRACE, AND PROGRAMMING/DEBUGGING PINOUT DESCRIPTION

PIC32MZ1025W104		WFI32E01		Pin Type	Buffer Type	Description
Pin Name	Pin Number	Pin Name	Pin Number			
JTAG						
TCK	B46	TCK	47	I	ST	JTAG Test Clock/Programming Clock Input
TDI	A56	TDI	48	I	ST	JTAG Test Data/Programming Data Input
TDO	A57	TDO	49	O	DIG	JTAG Test Data Output
TMS	B47	TMS	46	I	ST	JTAG Test Mode Select Input
Trace						
TRCLK	B41	—	—	O	DIG	Trace Clock
TRD0	A49	—	—	O	DIG	
TRD1	A50	—	—	O	DIG	
TRD2	B43	—	—	O	DIG	
TRD3	A51	—	—	O	DIG	Trace Data
Programming/ Debugging						
$\overline{\text{MCLR}}$	A23	$\overline{\text{MCLR}}$	26	I	ST	Master Clear (Device Reset) Input (active-low)
PGC1/EMUC1	A61	—	—	I	ST	ICSP™ Programming Clock
PGC1ENTRY	A61	—	—	I	ST	Test Mode Entry Clock
PGC2/EMUC2	B50	PGC2	2	I	ST	ICSP™ Programming Clock
PGC2ENTRY	B50	—	—	I	ST	Test Mode Entry Clock
PGC4/EMUC4	B46	PGC4	47	I	ST	ICSP™ Programming Clock
PGC4ENTRY	B46	—	—	I	ST	Test Mode Entry Clock
PGD1/EMUD1	B51	—	—	I/O	DIG/ST	ICSP™ Programming Data
PGD1ENTRY	B51	—		I	ST	Test Mode Entry Data
PGD2/EMUD2	B49	PGD2	52	I/O	DIG/ST	ICSP™ Programming Data
PGD2ENTRY	B49	—	—	I	ST	Test Mode Entry Data
PGD4/EMUD4	A56	PGD4	48	I/O	DIG/ST	ICSP™ Programming Data
PGD4ENTRY	A56	—	—	I	ST	Test Mode Entry Data

Legend: DIG = Digital input ST = Schmitt Trigger input with CMOS levels O = Output I = Input
PPS = Peripheral Pin Select

TABLE 2-19: WI-FI® INTERFACE PINOUT DESCRIPTION

PIC32MZ1025W104		WFI32E01		Pin Type	Buffer Type	Description
Pin Name	Pin Number	Pin Name	Pin Number			
RF_FE_1	A45(1)	—	—	I/O	DIG/ST	
RF_FE_2	B38	RF_FE_2	35	I/O	DIG/ST	
RF_FE_3	A44(1)	—	—	I/O	DIG/ST	
RF_FE_4	B37	RF_FE_4	34	I/O	DIG/ST	
RF_FE_5	A27	—	—	I/O	DIG/ST	
RF_FE_6	B22	—	—	I/O	DIG/ST	
RF_FE_7	B21	—	—	I/O	DIG/ST	
RF_FE_8	A26	—	—	I/O	DIG/ST	RF Front-End Control
ANALOG_TEST	A31	—	—	O	—	Analog Test Output
IN_TSSI	B27	—	—	I	—	TSSI (Transmitter Signal Strength Indication) Input
MBS_EXTRA_48K	B31	—	—	O	—	DC Output (Band Gap Voltage)
RXR_IN	A39	—	—	I	—	Receiver Input
TXR_LPA_VOUT	A43	—	—	O	—	Transmitter Output

Legend: DIG = Digital input ST = Schmitt Trigger input with CMOS levels O = Output I = Input

Note 1: A44 and A45 pins are used for controlling the FEM on the WFI32E01 module. Microchip recommends using these pins as described in the reference design package. Contact the Microchip Sales/Support Team for the reference package.

TABLE 2-20: WI-FI® BLUETOOTH® COEXISTENCE(1)

PIC32MZ1025W104		WFI32E01		Pin Type	Buffer Type	Description
Pin Name	Pin Number	Pin Name	Pin Number			
BT_CLK_OUT	B18	BT_CLK_OUT	24	O	DIG	Bluetooth® Clock Out
PTA_BT_ACTIVE	B20	PTA_BT_ACTIVE	28	I/O	DIG/ST	Packet Traffic Arbitration (PTA) three-wire interface for Wi-Fi® and Bluetooth® co-existence
PTA_BT_PRIO	A24	PTA_BT_PRIO	25	I/O	DIG/ST	
PTA_WLAN_ACTIVE	B19	PTA_WLAN_ACTIVE	27	I/O	DIG/ST	

Legend: DIG = Digital input ST = Schmitt Trigger input with CMOS levels O = Output I = Input

Note 1: This feature is currently not supported and should not be used in an end-product design. Microchip plans to support this feature in the future.

 © 2020 Microchip Technology Inc.

TABLE 2-21: CVD PINOUT DESCRIPTION

PIC32MZ1025W104		WFI32E01		Pin Type	Buffer Type	Description
Pin Name	Pin Number	Pin Name	Pin Number			
CVD1	A62	CVD1	3	O	DIG	ADC CVD Controller Output
CVD2	B51	CVD2	7	O	DIG	
CVD3	A61	—	—	O	DIG	
CVD4	B50	CVD4	2	O	DIG	
CVD5	B49	CVD5	52	O	DIG	
CVD6	B47	CVD6	46	O	DIG	
CVD7	A57	CVD7	49	O	DIG	
CVD8	B46	CVD8	47	O	DIG	
CVD9	A56	CVD9	48	O	DIG	
CVD10	A52	—	—	O	DIG	
CVD11	B43	—	—	O	DIG	
CVD12	A50	—	—	O	DIG	
CVD13	A49	—	—	O	DIG	
CVD14	B41	CVD14	44	O	DIG	
CVD15	A48	CVD15	42	O	DIG	
CVD16	B40	—	—	O	DIG	
CVD17	B39	CVD17	41	O	DIG	
CVD18	B38	—	—	O	DIG	
CVD19	A45	—	—	O	DIG	

Legend: DIG = Digital input O = Output

TABLE 2-22: ENHANCED CVD PINOUT DESCRIPTION

PIC32MZ1025W104		WFI32E01		Pin Type	Buffer Type	Description
Pin Name	Pin Number	Pin Name	Pin Number			
CVDR1	A62	CVDR1	3	O	DIG	ADC CVD Controller RX Output
CVDR2	B51	CVDR2	7	O	DIG	
CVDR3	A61	—	—	O	DIG	
CVDR4	B50	CVDR4	2	O	DIG	
CVDR5	B49	CVDR5	52	O	DIG	
CVDR6	B47	CVDR6	46	O	DIG	
CVDR7	A57	CVDR7	49	O	DIG	
CVDR8	B46	CVDR8	47	O	DIG	
CVDR9	A56	CVDR9	48	O	DIG	
CVDR10	A52	—	—	O	DIG	
CVDR11	B43	—	—	O	DIG	
CVDR12	A50	—	—	O	DIG	
CVDR13	A49	—	—	O	DIG	
CVDR14	B41	CVDR14	44	O	DIG	
CVDR15	A48	CVDR15	42	O	DIG	
CVDR16	B40	—	—	O	DIG	
CVDR17	B39	CVDR17	41	O	DIG	
CVDR18	B38	—	—	O	DIG	
CVDR19	A45	—	—	O	DIG	

Legend: DIG = Digital input O = Output

TABLE 2-22: ENHANCED CVD PINOUT DESCRIPTION (CONTINUED)

PIC32MZ1025W104		WFI32E01		Pin Type	Buffer Type	Description
Pin Name	Pin Number	Pin Name	Pin Number			
CVDT0	A57	CVDT0	49	O	DIG	ADC CVD Controller TX Output
CVDT1	B47	CVDT1	46	O	DIG	
CVDT2	B49	CVDT2	52	O	DIG	
CVDT3	B50	CVDT3	2	O	DIG	
CVDT4	A61	—	—	O	DIG	
CVDT5	B51	CVDT5	7	O	DIG	
CVDT6	A62	CVDT6	3	O	DIG	
CVDT7	B5	CVDT7	18	O	DIG	
CVDT8	B57	CVDT8	10	O	DIG	
CVDT9	A68	CVDT9	9	O	DIG	
CVDT10	B58	CVDT10	12	O	DIG	
CVDT11	A69	CVDT11	8	O	DIG	
CVDT12	B2	CVDT12	13	O	DIG	
CVDT13	A4	CVDT13	14	O	DIG	
CVDT14	A6	CVDT14	15	O	DIG	
CVDT15	A5	CVDT15	16	O	DIG	
CVDT16	B4	CVDT16	17	O	DIG	
CVDT17	B6	—	—	O	DIG	
CVDT18	A9	—	—	O	DIG	
CVDT19	B8	—	—	O	DIG	
CVDT20	A10	—	—	O	DIG	
CVDT21	B9	—	—	O	DIG	
CVDT22	B10	—	—	O	DIG	
CVDT23	A12	—	—	O	DIG	

Legend: DIG = Digital input O = Output

TABLE 2-23: CTRT PINOUT DESCRIPTION

PIC32MZ1025W104		WFI32E01		Pin Type	Buffer Type	Description
Pin Name	Pin Number	Pin Name	Pin Number			
CTRTM0	B39	CTRTM0	41	I	ST	CTR External Trigger
CTRTM1	B40	—	—	I	ST	

Legend: ST = Schmitt Trigger input with CMOS levels I = Input

TABLE 2-24: PTG PINOUT DESCRIPTION

PIC32MZ1025W104		WFI32E01		Pin Type	Buffer Type	Description
Pin Name	Pin Number	Pin Name	Pin Number			
PTG28	PPS	PTG28	PPS	O	—	Peripheral Trigger Generator output buffer data
PTG29	PPS	PTG29	PPS	O	—	
PTG30	PPS	PTG30	PPS	O	—	
PTG31	PPS	PTG31	PPS	O	—	

Legend: O = Output PPS = Peripheral Pin Select

 © 2020 Microchip Technology Inc.

3.0 WFI32E01 MODULE DESCRIPTION

The WFI32E01 is a fully certified module that contains the PIC32MZ1025W104 SoC, an integrated FEM, and Trust&GO with following antenna options:

- PCB antenna (WFI32E01PC/WFI32E01PE)
- U.FL connector (WFI32E01UC/WFI32E01UE) for external antenna

The Trust&GO is a pre-configured and pre-provisioned secure element of Microchip's family of security-focused devices.

Figure 3-1 represents the WFI32E01 module block diagram.

FIGURE 3-1: WFI32E01 MODULE BLOCK DIAGRAM

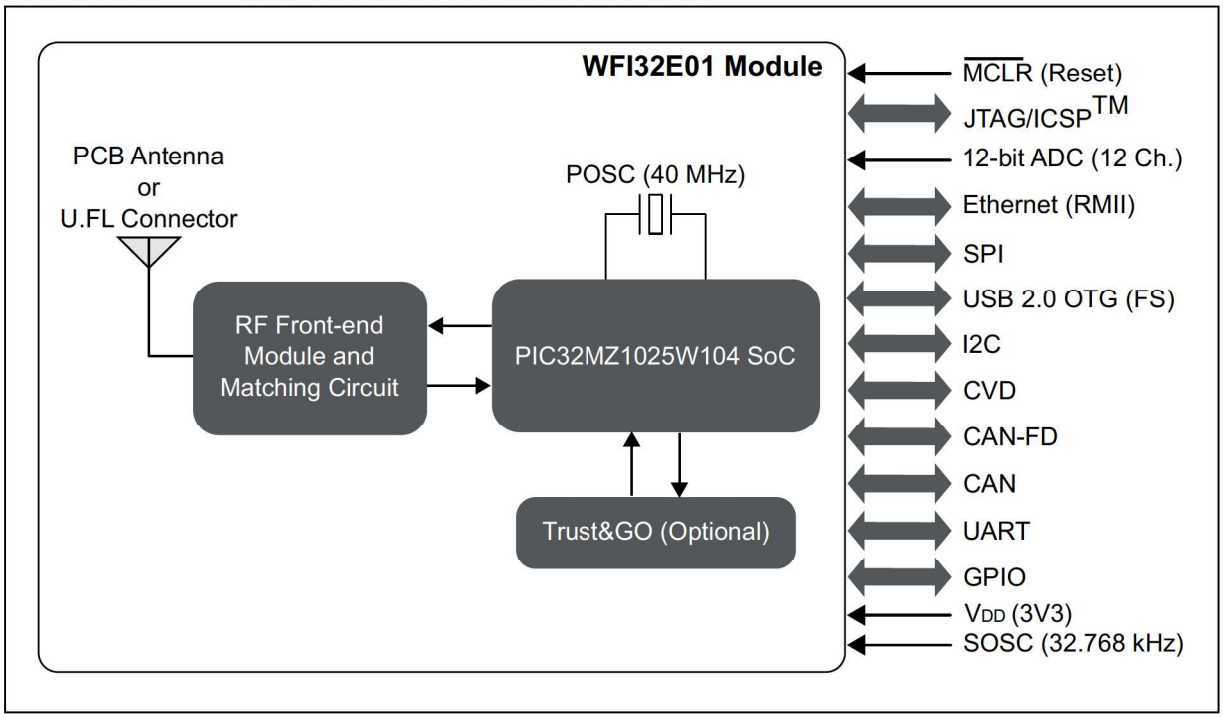

3.1 Pinout Details

The following figure illustrates the module pinout diagram.

FIGURE 3-2: WFI32E01 MODULE PINOUT DIAGRAM

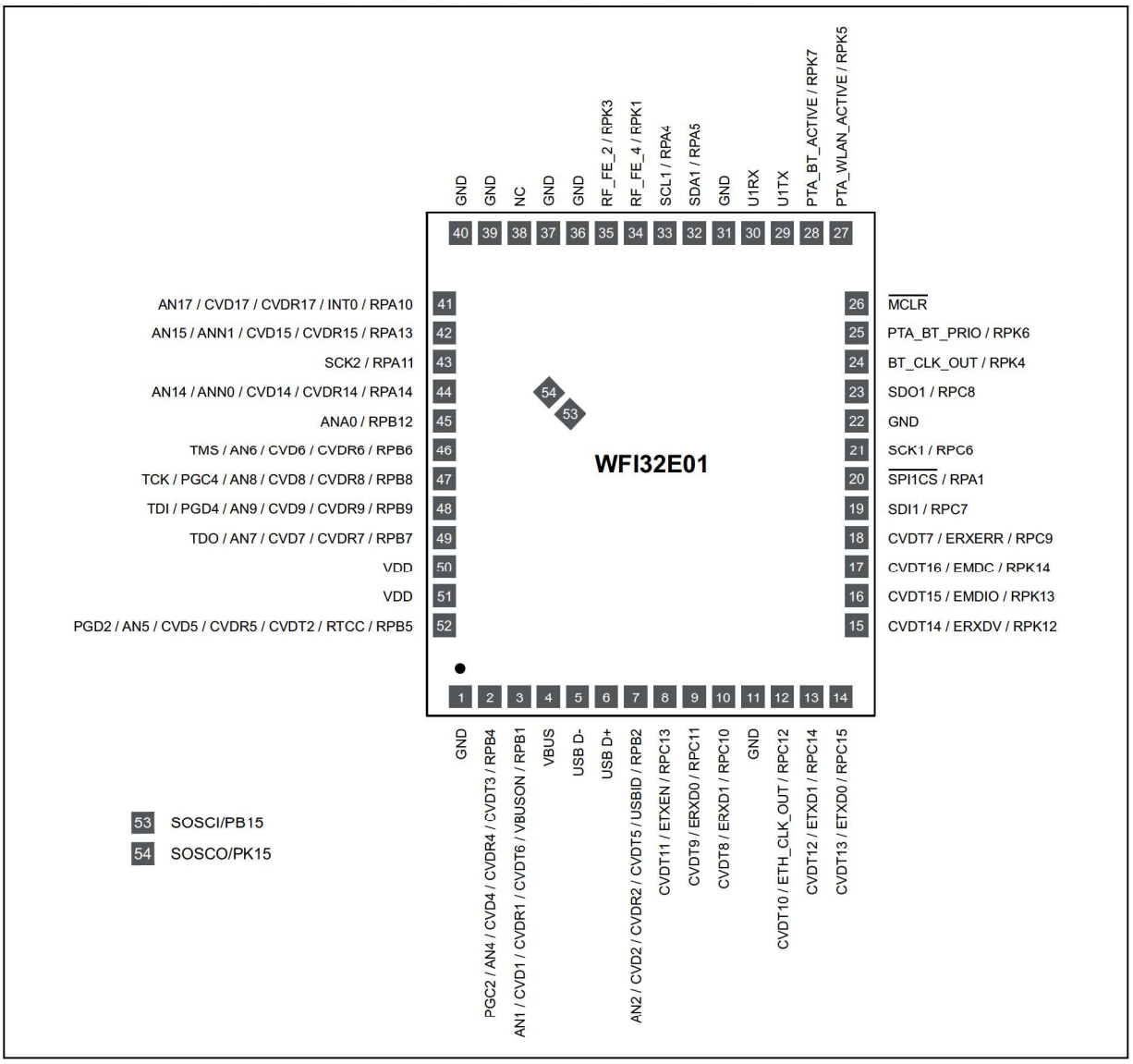

Note 1: For details on the exact pin placement and dimensions, refer to **41.0 "Packaging Information"**.

2: For pin descriptions, refer to Table 3-1.

 © 2020 Microchip Technology Inc.

TABLE 3-1: WFI32E01 MODULE PIN DESCRIPTION

Module Pin Number	SoC Pin Number	Pin Name	Pin Type(1)	Description
1	—	GND	P	Ground
2	B50	PGC2	I	In Circuit Serial Programming™ (ICSP™) programming clock
		AN4	I	Analog input
		CVD4	O	ADC CVD controller output
		CVDR4	O	ADC CVD controller RX
		CVDT3	O	ADC CVD controller TX
		RPB4	I/O	Remappable peripheral(2)
		RB4	I/O	PORTB digital I/O
3	A62	AN1	I	Analog input
		CVD1	O	ADC CVD controller output
		CVDR1	O	ADC CVD controller RX
		CVDT6	O	ADC CVD controller TX
		VBUSON	O	USB ON signal for external VBUS source
		RPB1	I/O	Remappable peripheral(2)
		RB1	I/O	PORTB digital I/O
4	A65	VBUS	I	USB VBUS signal input (5V), can be left open when USB not in use
5	A63	USB D-	I/O	USB data -
6	A64	USB D+	I/O	USB data +
7	B51	AN2	I	Analog input
		CVD2	O	ADC CVD controller output
		CVDR2	O	ADC CVD controller RX
		CVDT5	O	ADC CVD controller TX
		USBID	I	USB OTG ID input
		RPB2	I/O	Remappable peripheral(2)
		RB2	I/O	PORTB digital I/O
8	A69	CVDT11	O	ADC CVD controller TX
		ETXEN	O	Ethernet transmit enable output
		RPC13	I/O	Remappable peripheral(2)
		RC13	I/O	PORTC digital I/O
9	A68	CVDT9	O	ADC CVD controller TX
		ERXD0	I	Ethernet RMII receive data bit 0
		RPC11	I/O	Remappable peripheral(2)
		RC11	I/O	PORTC digital I/O
10	B57	CVDT8	O	ADC CVD controller TX
		ERXD1	I	Ethernet RMII receive data bit 1
		RPC10	I/O	Remappable peripheral(2)
		RC10	I/O	PORTC digital I/O
11	—	GND	P	Ground
12	B58	CVDT10	O	ADC CVD controller TX
		ETH_CLK_OUT	O	Ethernet RMII reference clock out (50 MHz), requires an external 33Ω series termination resistor
		RPC12	I/O	Remappable peripheral(2)
		RC12	I/O	PORTC digital I/O
13	B2	CVDT12	O	ADC CVD controller TX
		ETXD1	O	Ethernet RMII transmit data bit 1
		RPC14	I/O	Remappable peripheral(2)
		RC14	I/O	PORTC digital I/O

TABLE 3-1: WFI32E01 MODULE PIN DESCRIPTION (CONTINUED)

Module Pin Number	SoC Pin Number	Pin Name	Pin Type(1)	Description
14	A4	CVDT13	O	ADC CVD controller TX
		ETXD0	O	Ethernet RMII receive data bit 0
		RPC15	I/O	Remappable peripheral(2)
		RC15	I/O	PORTC digital I/O
15	A6	CVDT14	O	ADC CVD controller TX
		ERXDV	I	Ethernet RMII receive data valid
		RPK12	I/O	Remappable peripheral(2)
		RK12	I/O	PORTK digital I/O
16	A5	CVDT15	O	ADC CVD controller TX
		EMDIO	I/O	Ethernet management data IO
		RPK13	I/O	Remappable peripheral(2)
		RK13	I/O	PORTK digital I/O
17	B4	CVDT16	O	ADC CVD controller TX
		EMDC	O	Ethernet management data clock
		RPK14	I/O	Remappable peripheral(2)
		RK14	I/O	PORTK digital I/O
18	B5	CVDT7	O	ADC CVD controller TX
		ERXERR	I	Ethernet RMII receive error
		RPC9	I/O	Remappable peripheral(2)
		RC9	I/O	PORTC digital I/O
19	A13	SDI1	I	SPI1 serial data in
		RPC7	I/O	Remappable peripheral(2)
		RC9	I/O	PORTC digital I/O
20	A14	$\overline{\text{SPI1CS}}$	O	SPI slave select/chip select input (active-low)
		RPA1	I/O	Remappable peripheral(2)
		RA1	I/O	PORTA digital I/O
21	B11	SCK1	I/O	SPI1 serial clock
		RPC6	I/O	Remappable peripheral(2)
		RC6	I/O	PORTC digital I/O
22	—	GND	P	Ground
23	B12	SDO1	O	SPI1 serial data out
		RPC8	I/O	Remappable peripheral(2)
		RC8	I/O	PORTC digital I/O
24	B18	BT_CLK_OUT	O	Bluetooth® reference clock out (26 MHz)
		RPK4	I/O	Remappable peripheral(2)
		RK4	I/O	PORTK digital I/O
25	A24	PTA_BT_PRIO	I/O	Packet Traffic Arbitration (PTA) Bluetooth® priority signal for Bluetooth® and Wi-Fi® coexistence(7)
		RPK6	I/O	Remappable peripheral(2)
		RK6	I/O	PORTK digital I/O
26(5)	A23	$\overline{\text{MCLR}}$	I	Reset signal, Active-low, requires external RC circuit
27(5)	B19	PTA_WLAN_ACTIVE	I/O	PTA Wi-Fi® active signal for Bluetooth® and Wi-Fi® coexistence(7)
		RPK5	I/O	Remappable peripheral(2)
		RK5	I/O	PORTK digital I/O
28(5)	B20	PTA_BT_ACTIVE	I/O	PTA Bluetooth® active signal for Bluetooth® and Wi-Fi® coexistence(7)
		RPK7	I/O	Remappable peripheral(2)
		RK7	I/O	PORTK digital I/O
29(5)	A22	U1TX	O	UART1 transmit
30(5)	B17	U1RX	I	UART1 receive

 © 2020 Microchip Technology Inc.

TABLE 3-1: WFI32E01 MODULE PIN DESCRIPTION (CONTINUED)

Module Pin Number	SoC Pin Number	Pin Name	Pin Type(1)	Description
31	—	GND	P	Ground
32	B15	SDA1	I/O	I2C data, requires an external pull-up resistor (1.8 kΩ)
		RPA5	I/O	Remappable peripheral(2)
		RA5	I/O	PORTA digital I/O
33	A16	SCL1	I/O	I2C clock, requires an external pull-up resistor (1.8 kΩ)
		RPA4	I/O	Remappable peripheral(2)
		RA4	I/O	PORTA digital I/O
34	B37	RF_FE_4	I/O	RF front-end control
		RPK1	I/O	Remappable peripheral(2)
		RK1	I/O	PORTK digital I/O
35	B38	RF_FE_2	I/O	RF front-end control
		RPK3	I/O	Remappable peripheral(2)
		RK3	I/O	PORTK digital I/O
36	—	GND	P	Ground
37	—	GND	P	Ground
38	—	NC	—	RF test pad (only for factory use)
39	—	GND	P	Ground
40	—	GND	P	Ground
41	B39	AN17	I	Analog input
		CVD17	O	ADC CVD controller output
		CVDR17	O	ADC CVD controller RX output
		INT0	I	External interrupt input 0
		RPA10	I/O	Remappable peripheral(2)
		RA10	I/O	PORTA digital I/O
42	A48	AN15	I	Analog input
		ANN1	I	Analog input
		CVD15	O	ADC CVD controller output
		CVDR15	O	ADC CVD controller RX
		RPA13	I/O	Remappable peripheral(2)
		RA13	I/O	PORTA digital I/O
43	A47	SCK2	I/O	SPI2 serial clock
		RPA11	I/O	Remappable peripheral(2)
		RA11	I/O	PORTA digital I/O
44	B41	AN14	I	Analog input
		ANN0	I	Analog input
		CVD14	O	ADC CVD controller output
		CVDR14	O	ADC CVD controller RX
		RPA14	I/O	Remappable peripheral(2)
		RA14	I/O	PORTA digital I/O
45	A51	ANA0	I	Analog input
		RPB12	I/O	Remappable peripheral(2)
		RB12	I/O	PORTB digital I/O
46	B47	TMS	I	JTAG Test mode select input
		AN6	I	Analog input
		CVD6	O	ADC CVD controller output
		CVDR6	O	ADC CVD controller RX
		RPB6	I/O	Remappable peripheral(2)
		RB6	I/O	PORTB digital I/O

TABLE 3-1: WFI32E01 MODULE PIN DESCRIPTION (CONTINUED)

Module Pin Number	SoC Pin Number	Pin Name	Pin Type(1)	Description
47	B46	TCK	I	JTAG test cock/programming clock input
		PGC4	I	ICSP™ programming clock
		AN8	I	Analog input
		CVD8	O	ADC CVD controller output
		CVDR8	O	ADC CVD controller RX
		RPB8	I/O	Remappable peripheral(2)
		RB8	I/O	PORTB digital I/O
48	A56	TDI	I	JTAG test data/programming data input
		PGD4	I/O	ICSP™ programming data
		AN9	I	Analog input
		CVD9	O	ADC CVD controller output
		CVDR9	O	ADC CVD controller RX
		RPB9	I/O	Remappable peripheral(2)
		RB9	I/O	PORTB digital I/O
49	A57	TDO	O	JTAG test data output
		AN7	I	Analog input
		CVD7	O	ADC CVD controller output
		CVDR7	O	ADC CVD controller RX
		RPB7	I/O	Remappable peripheral(2)
		RB7	I/O	PORTB digital I/O
50	—	VDD	P	Input supply voltage (3V3)
51	—	VDD	P	Input supply voltage (3V3)
52	B49	PGD2	I/O	ICSP™ programming data
		AN5	I	Analog input
		CVD5	O	ADC CVD controller output
		CVDR5	O	ADC CVD controller RX
		CVDT2	O	ADC CVD controller TX
		RTCC	O	RTCC output clock
		RPB5	I/O	Remappable peripheral(2)
		RB5	I/O	PORTB digital I/O
53	A59	SOSCI	I	Secondary oscillator input
		PB15	I	PORTB digital input
54	A58	SOSCO	O	Secondary oscillator output
		PK15	I	PORTK digital input
55-60(6)	—	NC	—	Test pad (only for factory use)
61-63(6)	—	GND	P	Exposed GND pads, should be soldered on the host board

Note 1: Legend:
- I = Input pin
- O = Output pin
- I/O = Input/Output pin
- P = Power pin

2: These pins can be configured for any of the supported peripheral functions based on the user's requirement. For more details, refer to **13.4 "Peripheral Pin Select (PPS)"**.

3: Every I/O port pin (RAx-RKx) can be used as a change notification pin (CNAx-CNKx). See **13.0 "I/O Ports"** for more information.

4: Shaded pins are 5V tolerant pins.

5: Pins 26 through 30 are critical pins, and Microchip recommends to add series resistors in the host board.

6: For the placement of pins 55 through 63, refer to **41.2 "WFI32E01 Module Packaging Information"**.

7: The PTA features is currently not supported and should not be used in an end-product design. Microchip plans to support this feature in the future.

 © 2020 Microchip Technology Inc.

Note: For module related recommended operating values and electrical characteristics, refer to Section 40.2, WFI32E01 Module Electrical Specifications.

3.2 Basic Connection Requirement

The WFI32E01 module requires attention to a minimal set of device pin connections before proceeding with development.

FIGURE 3-3: WFI32E01 MODULE BASIC CONNECTIONS

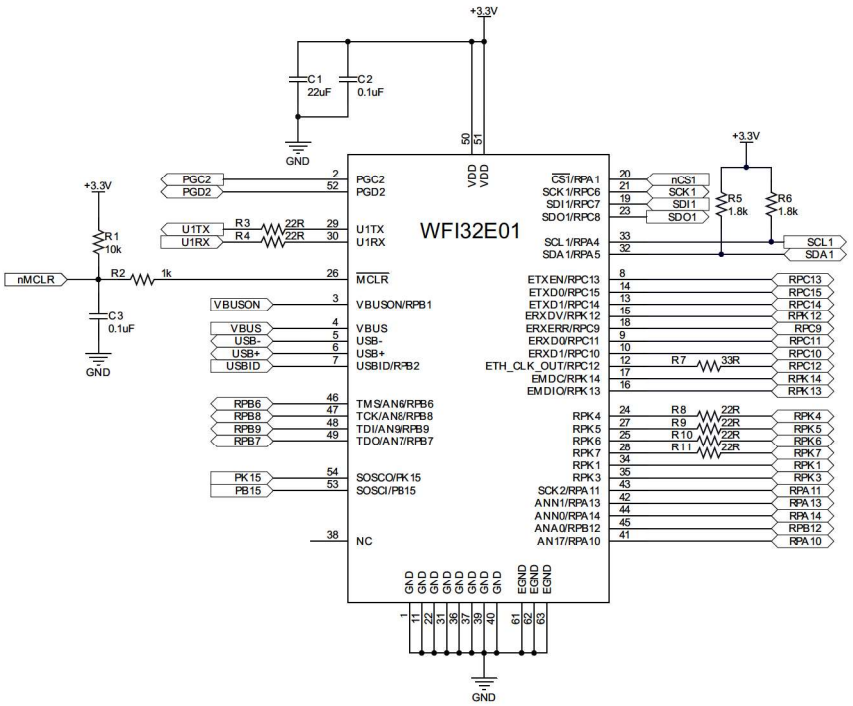

Note 1: The mentioned resistance values are only for the guidance. For details on the application schematics, refer to the *PIC32 WFI32E Curiosity Board User's Guide (DS50003028).*

3.2.1 POWER PINS

It is recommended to add a bulk and a decoupling capacitor at the input supply pin (VDD and GND pins) of the WFI32E01 module.

FIGURE 3-4: RECOMMENDED MODULE POWER SUPPLY CONNECTIONS

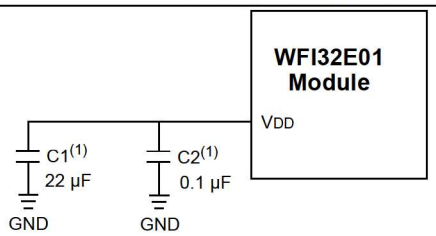

Note 1: Value of the C1 and C2 capacitors may vary based on the application requirement.

2: The C1 and C2 capacitors should be placed close to the module pin.

3.2.2 MASTER CLEAR ($\overline{MCLR}$) PIN

The $\overline{MCLR}$ pin provides for two specific device functions:

- Device Reset
- Device programming and debugging

Pulling the $\overline{MCLR}$ pin low generates a device Reset. Figure 3-5 illustrates a typical $\overline{MCLR}$ circuit. During device programming and debugging, the resistance and capacitance that can be added to the pin must be considered. Device programmers and debuggers drive the $\overline{MCLR}$ pin. Consequently, specific voltage levels (VIH and VIL) and fast signal transitions must not be adversely affected. Therefore, specific values of R and C need to be adjusted based on the application and PCB requirements.

For example, as illustrated in Figure 3-5, it is recommended that capacitor C be isolated from the $\overline{MCLR}$ pin during programming and debugging operations.

Place the components illustrated in Figure 3-5 within one-quarter inch (6 mm) from the MCLR pin.

FIGURE 3-5: EXAMPLE OF MCLR PIN CONNECTIONS

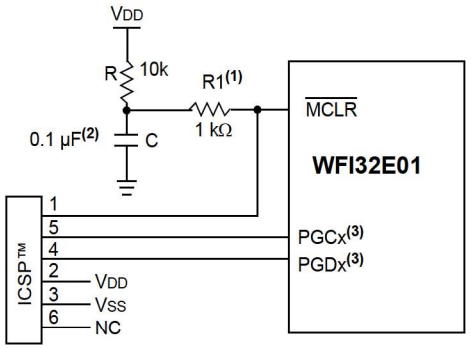

Note 1: 470Ω ≤ R1 ≤ 1 kΩ limits any current flowing into MCLR from the external capacitor C, in the event of MCLR pin breakdown, due to Electrostatic Discharge (ESD) or Electrical Overstress (EOS). Ensure that the MCLR pin VIH and VIL specifications are met without interfering with the Debug/Programmer tools.

2: The capacitor can be sized to prevent unintentional Resets from brief glitches or to extend the device Reset period during POR.

3: No pull-ups or bypass capacitors are allowed on active debug/program PGCx and PGDx pins.

3.2.3 ICSP PINS

The PGCx/PGECx and PGDx/PGEDx pins are used for ICSP and debugging purposes. It is recommended to use PGC2 and PGD2 for the WFI32E01 module as the default configuration.

Keep the trace length between the ICSP pins of the WFI32E01 module and the ICSP header as short as possible. If the ICSP connector is expected to experience an ESD event, a series resistor is recommended with the value in the range of a few tens of Ωs, not to exceed 100Ω.

Ensure that the Communication Channel Select (PGECx/PGEDx pins) programmed into the device matches the physical connections for the ICSP to MPLAB ICD 3/MPLAB ICD 4 or MPLAB REAL ICE™ in-circuit emulator.

For more information on MPLAB ICD 3/MPLAB ICD 4, and MPLAB REAL ICE in-circuit emulator connection requirements, refer to the following documents available from the Microchip website.

- *"MPLAB® ICD 4 In-Circuit Debugger Quick Start Guide"* (DS50002538)
- *"MPLAB® ICD 4 In-Circuit Debugger User's Guide"* (DS50002596)
- *"Using MPLAB® ICD 3"* (poster) (DS50001765)
- *"MPLAB® ICD 3 Design Advisory"* (DS50001764)
- *"MPLAB® REAL ICE™ In-Circuit Debugger User's Guide"* (DS50001616)
- *"Using MPLAB® REAL ICE™ Emulator"* (poster) (DS50001749)

3.2.4 JTAG

Note: This is an optional interface for the WFI32E01 module. JTAG can be used based on the selection of the debugger and programing interface.

The TMS, TDO, TDI and TCK pins are used for programming and debugging according to the Joint Test Action Group (JTAG) standard. Pull-up resistors are recommended on these lines for JTAG functionality. For remappable functionality, the discrete component value needs to be considered based on application.

It is recommended to keep the trace length between the JTAG connector and the JTAG pins on the WFI32E01 module as short as possible. If the JTAG connector is expected to experience an ESD event, a series resistor is recommended, with the value in the range of a few tens of Ωs, not to exceed 100Ω.

Refer to the AC/DC characteristics and timing requirements in the respective device specification for information on capacitive loading limits and pin input voltage high (VIH) and input voltage low (VIL) requirements.

3.2.5 UNUSED I/O PINS

Unused I/O pins should not be allowed to float as inputs. They can be configured as outputs and driven to a logic-low state.

Alternatively, inputs can be reserved by connecting the pin to VSS through a 1 kΩ to 10 kΩ resistor and configuring the pin as an input.

3.2.5.1 GPIO Pins/PPS Functions

Most of the WFI32E01 module pins can be configured as GPIOs pins or for PPS functionality. To find the functionality supported by each of these GPIOs, refer to Table 3-1.

It is recommended to add a series resistor on the host board for all GPIOs. The value of the series resistor depends on the actual pin configuration. These resistors must be placed close to the module. Figure 3-10 illustrates the placement of series resistor.

 © 2020 Microchip Technology Inc.

3.3 WFI32E01 Module Placement Guidelines

- For any Wi-Fi product, the antenna placement affects the performance of the whole system. The antenna requires free space to radiate RF signals and it must not be surrounded by the ground plane. Thus, for best PCB antenna performance, the WFI32E01PC/WFI32E01PE module should be placed at the edge of the host board.
- The WFI32E01PC/WFI32E01PE module ground outline edge should be aligned with the edge of the host board ground plane (see Figure 3-6).
- A low-impedance ground plane for the WFI32E01 module will ensure the best radio performance (best range and lowest noise). The ground plane can be extended beyond the minimum recommendation as required for the host board EMC and noise reduction.
- For best performance, keep metal structures and components (such as mechanical spacers, bump-on, and so on) at least 31.75 mm away from the PCB trace antenna as illustrated in Figure 3-6.
- The antenna on the WFI32E01 module should not be placed in direct contact with or close proximity to plastic casing or objects. Keep a minimum clearance of 10 mm in all directions around the PCB antenna (see Figure 3-6).

FIGURE 3-6: WFI32E01PC/WFI32E01PE MODULE PLACEMENT (TOP VIEW)

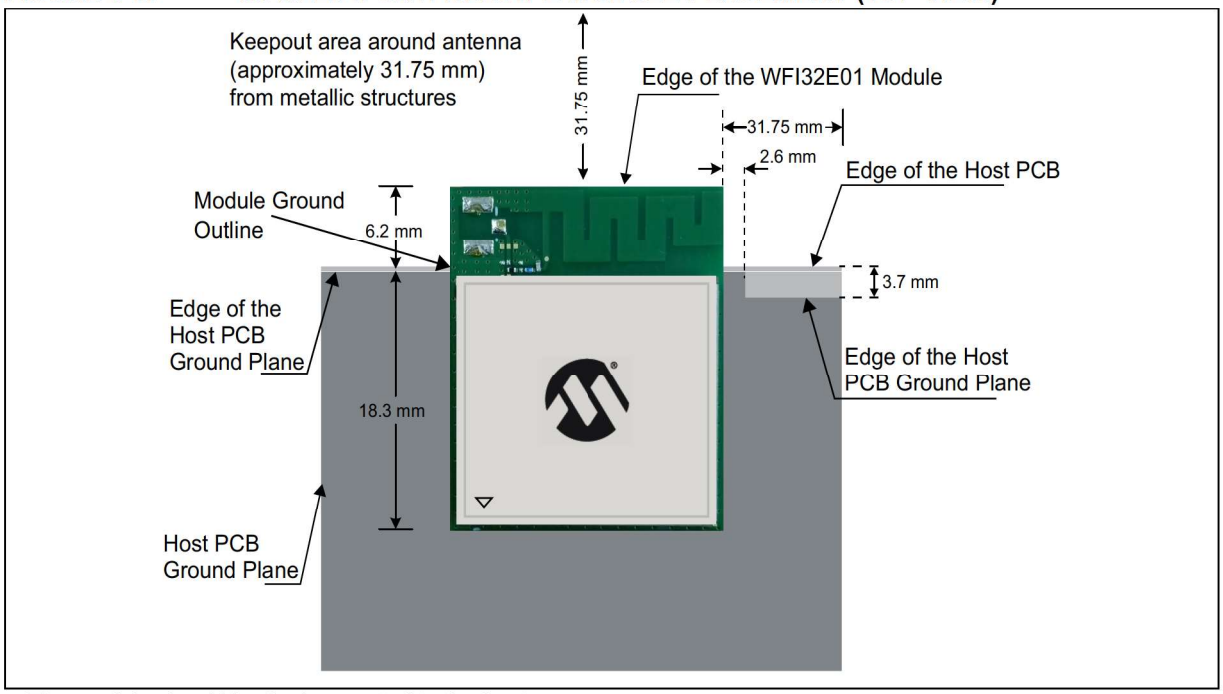

- The module should be flush mounted to the host board (see Figure 3-7).

FIGURE 3-7: WFI32E01 MOUNTING GUIDELINES RECOMMENDATION (SIDE VIEW)

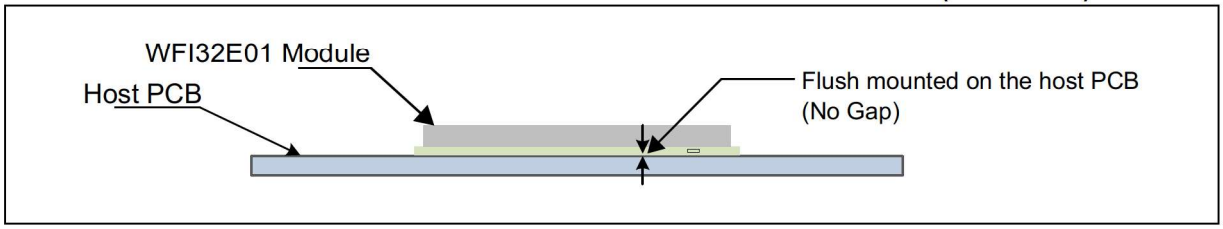

- The WFI32E01UC/WFI32E01UE module on the host board can be placed aligned to each other (see Figure 3-8).
- Three Exposed GND pads (61-63) on the bottom of the WFI32E01 module should be soldered to the host board (see Figure 41-6).
- A PCB cutout is required under RF test point (see Figure 41-6).
- Copper keepout areas are required on the top layer under voltage test points (55-60) (see Figure 41-6).

FIGURE 3-8: WFI32E01UC/WFI32E01UE MODULE PLACEMENT (TOP VIEW)

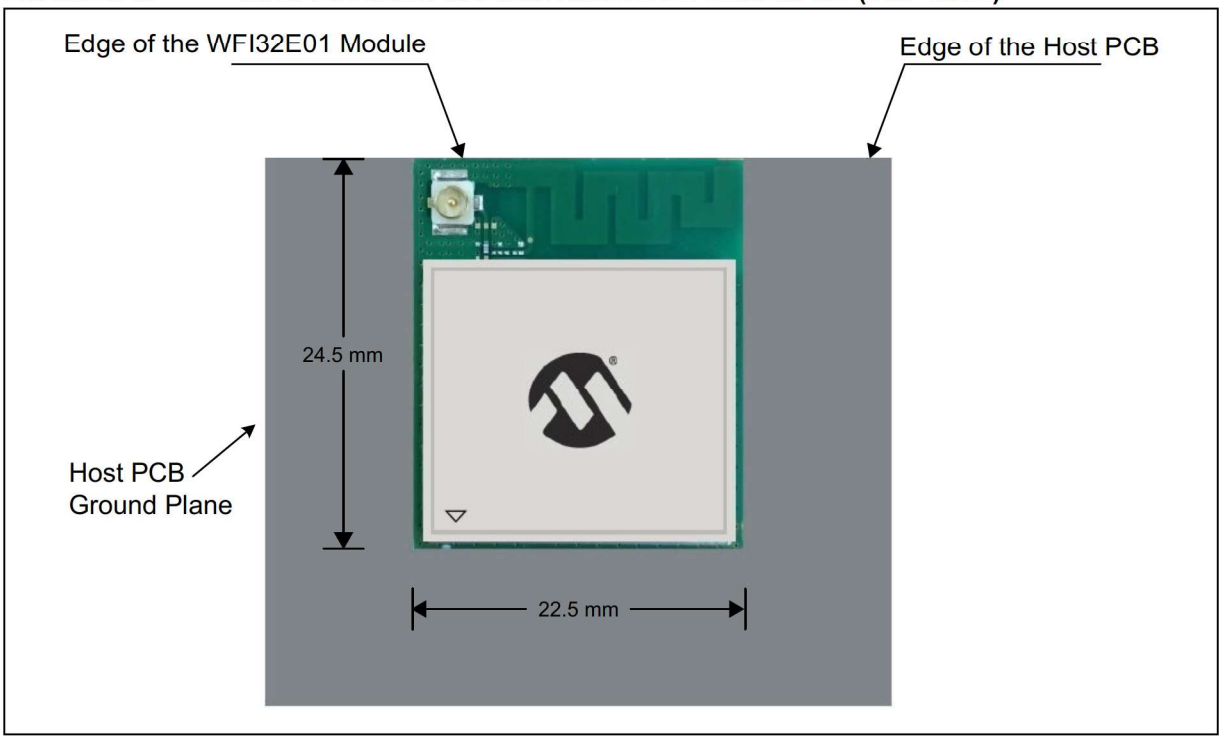

 © 2020 Microchip Technology Inc.

The following figure illustrates the examples of WFI32E01PC/WFI32E01PE module placement on a host board with a ground plane. Refer to Figure 3-6 for placement specific guidance.

FIGURE 3-9: EXAMPLES OF WFI32E01PC/WFI32E01PE MODULE PLACEMENTS ON THE HOST BOARD

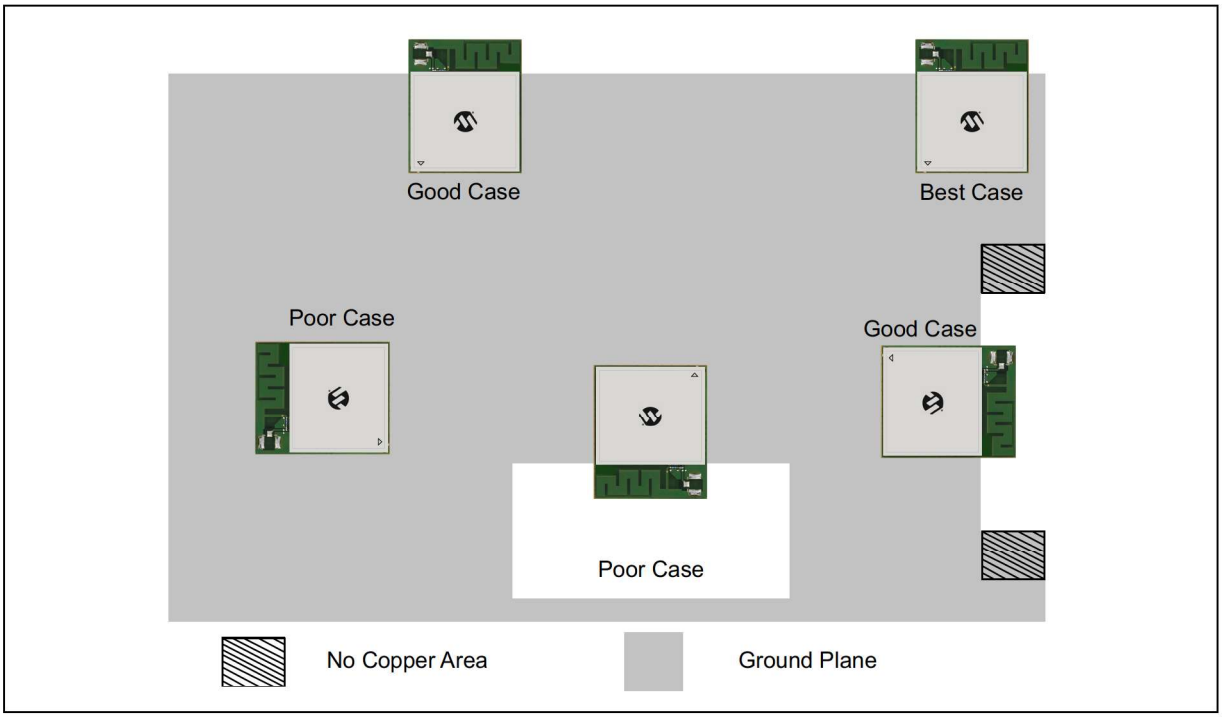

3.4 WFI32E01 Module Routing Guidelines

- Use the multi-layer host board for routing signals on the inner layer and the bottom layer.
- The top layer (underneath the module) of the host board must be ground with as many GND vias as possible (see, Figure 3-10 and Figure 41-8).
- Avoid fan-out of the signals under the module or antenna area. Use a via to fan-out signals to the edge of the WFI32E01 module.
- For better GND connection to the WFI32E01 module, solder the exposed GND pads of the WFI32E01 module on the host board.
- For module GND pad, use a GND via of a minimum 10 mil (hole diameter) for good ground to all the layers and thermal conduction path.
- It is recommended to have a series resistor on the host board for all GPIOs. These resistors must be placed close to the WFI32E01 module. Refer to Figure 3-10 for the placement of the series resistor. Pin 26 through pin 30 on the WFI32E01 module are critical pins to have series resistors. For more details on these pins, refer to Table 3.
- All Ethernet TX and RX signals trace lengths (RMII interface) are matched on the WFI32E01 module PCB.
- USB differential pair signals are 90Ω impedance matched on the WFI32E01 module PCB and the same should be followed on the host board.
- SOSC crystal (32.768 kHz) on host board should be placed close to the WFI32E01 module and follow the shortest trace routing length with minimum number of vias (see, Figure 3-10 and Figure 3-11).

FIGURE 3-10: EXAMPLE OF THE HOST BOARD TOP LAYER

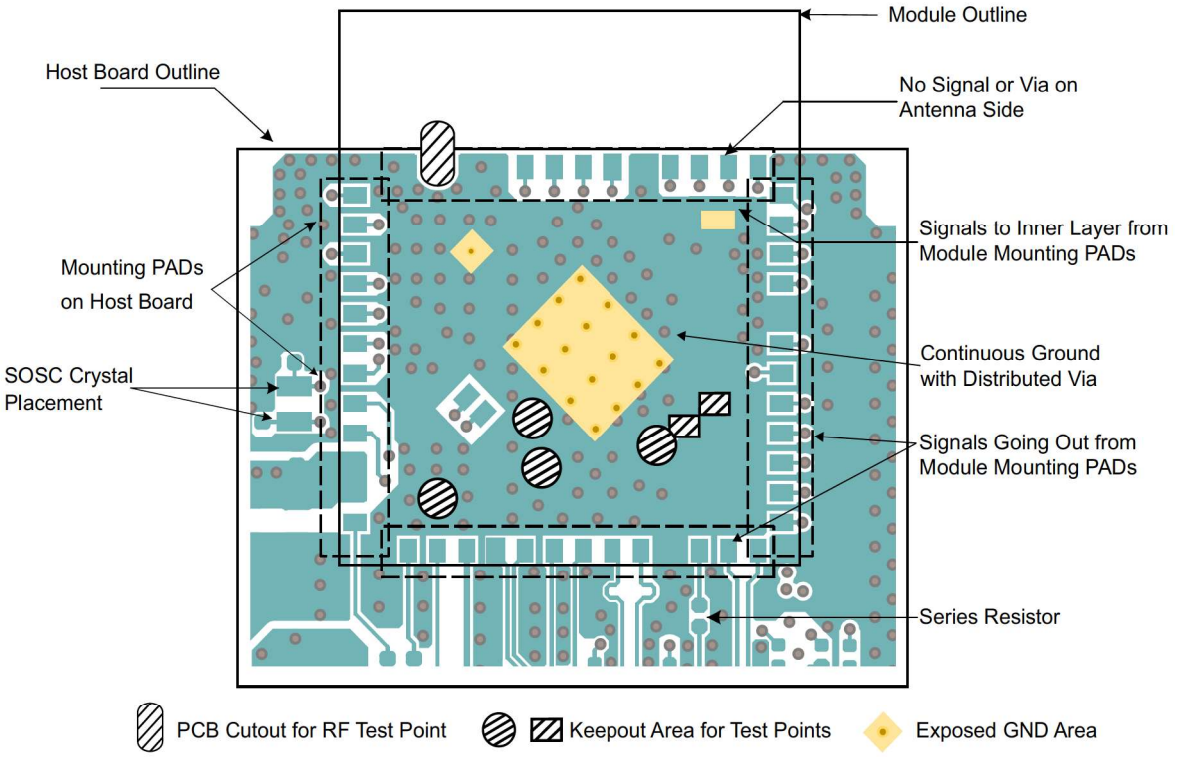

Note 1: For WFI32E01UC/UE module, edges of the host board and module can be aligned with continuous ground and ground vias (see Figure 3-8).

2: For recommended WFI32E01 module footprint, refer to Figure 41-8.

FIGURE 3-11: PLACEMENT AND ROUTING OF SOSC CRYSTAL

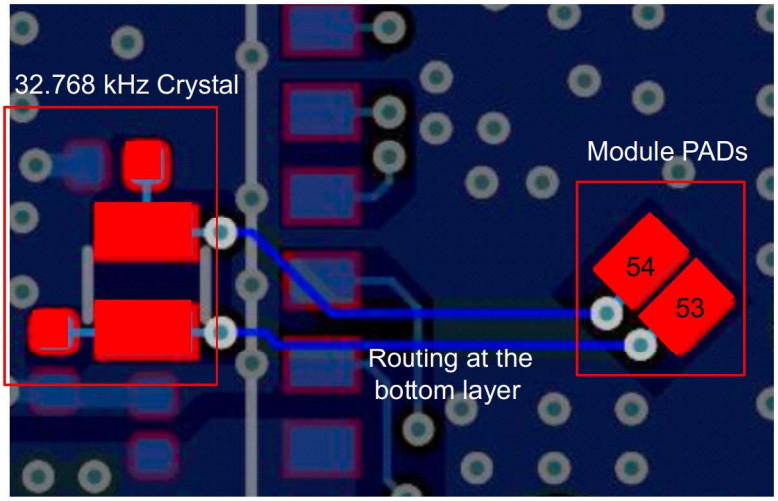

 © 2020 Microchip Technology Inc.

3.5 WFI32E01 Module RF Considerations

The overall performance of the system, RF and Wi-Fi is significantly affected by the product design, environment and application. The product designer must ensure system level shielding (if required) and verify the performance of the product features and applications.

Consider the following guidelines for optimal Wi-Fi performance:

- The WFI32E01 module must be positioned in a noise-free RF environment and must be kept far away from high-frequency clock signals and any other sources of RF energy
- The antenna must not be shielded by any metal objects
- Power supply must be clean and noise-free
- Make sure that the width of the traces routed to GND, VDD rails are sufficiently large for handling peak TX current consumption.

Note: The WFI32E01 module includes RF shielding on top of the board as a standard feature.

3.6 WFI32E01 Module Antenna Considerations

3.6.1 PCB ANTENNA

For the WFI32E01PC/WFI32E01PE module, the PCB antenna is fabricated on the top copper layer and covered in solder mask. The layers below the antenna do not have copper trace. It is recommended that the module is mounted on the edge of the host board and to have no PCB material below the antenna structure of the module and no copper traces or planes on the host board in that area.

The following table lists the technical specification of the PCB antenna and tested with the WFI32E01 module mounted on a Carrier/Evaluation Board.

TABLE 3-2: PCB ANTENNA SPECIFICATIONS

Parameter	Specification
Operating frequency	2400 ~ 2500 MHz
Peak gain	2.51 dBi at 2450 MHz
Efficiency (avg.)	71%

3.6.1.1 PCB Antenna Radiation Pattern

The following figures illustrate the PCB antenna radiation pattern.

FIGURE 3-12: PHI = 0 DEGREE ANTENNA RADIATION PATTERN

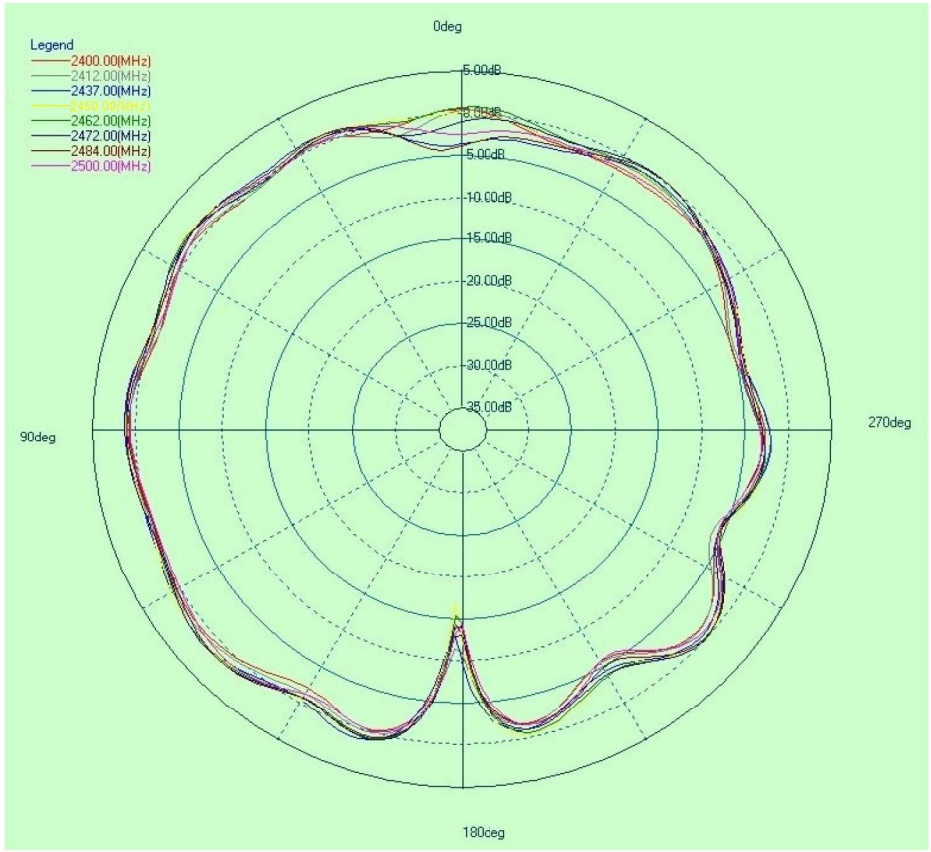

 © 2020 Microchip Technology Inc.

FIGURE 3-13: PHI = 90 DEGREE ANTENNA RADIATION PATTERN

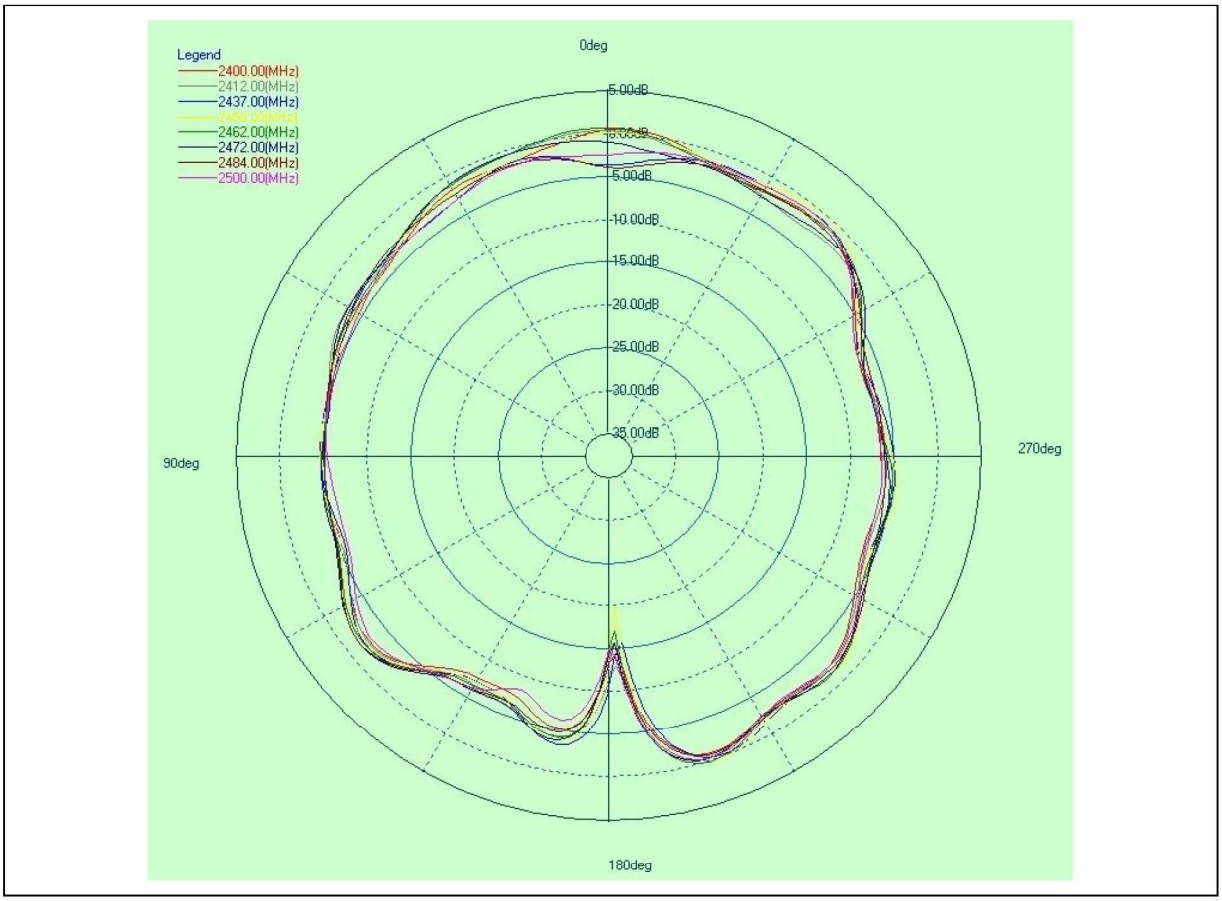

FIGURE 3-14: THETA = 90 DEGREE ANTENNA RADIATION PATTERN

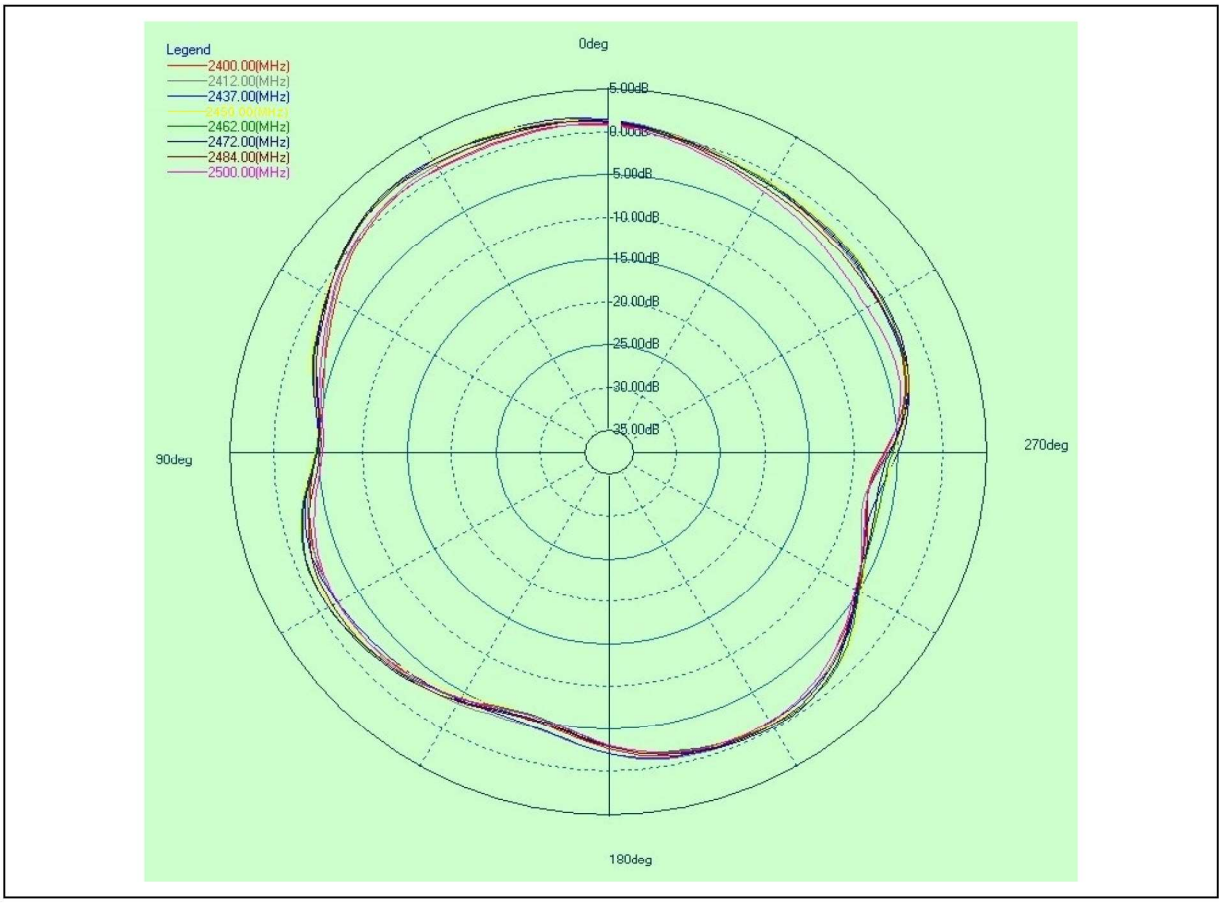

 © 2020 Microchip Technology Inc.

3.6.2 EXTERNAL ANTENNA PLACEMENT RECOMMENDATIONS

The following recommendations must be applied for the placement of the antenna and its cable:

- The antenna cable must not be routed over circuits generating electrical noise on the host board or alongside or underneath the module. It is preferred that the cable is routed straight out of the module.
- The antenna must not be placed in direct contact or in close proximity of the plastic casing/objects.
- Do not enclose the antenna within a metal shield.
- Keep any components which may radiate noise, signals or harmonics within the 2.4 GHz to 2.5 GHz frequency band away from the antenna and, if possible, shield those components. Any noise radiated from the host board in this frequency band degrades the sensitivity of the module.
- The antenna should preferably be placed at a distance greater than 5 cm away from the module. The following figure shows the antenna keep out area indication where the antenna must not be placed.

These recommendations are based on an open-air measurement and does not take into account any metal shielding of the customer end-product. When a metal enclosure is used, the antenna can be located closer to the WFI32E01UC/WFI32E01UE module.

Note:	These are generic guidelines and it is recommended that customers check and fine-tune the antenna positioning in the final host product based on RF performance.

The following figure provides an indication on how the antenna cable should be routed depending on the location of the antenna with respect to the WFI32E01UC/WFI32E01UE PCB, there are two possible options for the optimum routing of the cable.

FIGURE 3-15: WFI32E01UC/WFI32E01UE ANTENNA PLACEMENT GUIDELINES

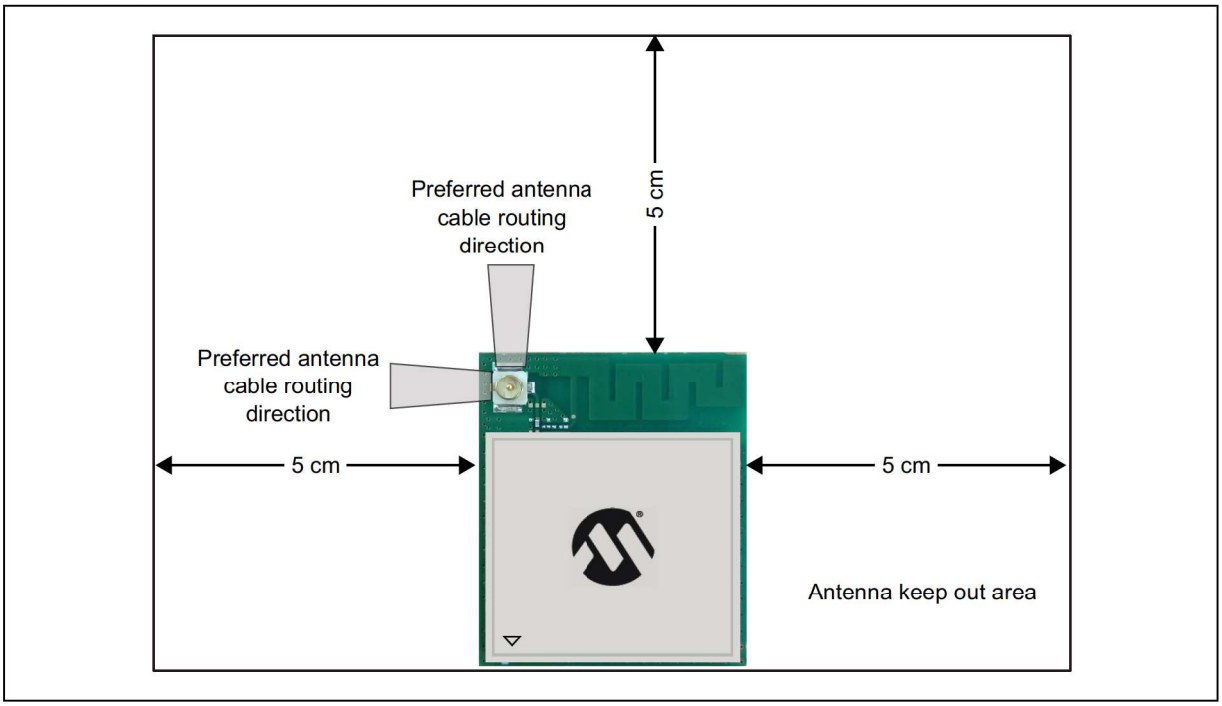

3.6.2.1 External Antennas

The WFI32E01UC/WFI32E01UE modules have an ultra-small surface mount U.FL connector for an external antenna connection. The choice of antenna is limited to the antenna types for which the module is tested and approved.

The WFI32E01UC/WFI32E01UE modules are approved to use with the antennas listed in Table 3-3.

It is permissible to use different antenna, provided the same antenna type, antenna gain (equal or less than), and similar in-band and out-of-band characteristics are present (refer to specification sheet for cutoff frequencies).

If other antenna types are used, the OEM installer must conduct the necessary assessments and authorize the antenna with respective regulatory agencies and ensure compliance.

TABLE 3-3: LIST OF APPROVED EXTERNAL ANTENNAS

Sl. No.	Part Number	Manufacturer	Antenna Gain (dBi)	Antenna Type	Regulatory Authority(1)			Cable Length/ Remarks
					FCC (2)(3)	ISED	CE	
1	RFA-02-L2H1	Alead/Aristotle	2	Dipole	x	x	x	150 mm
2	RFA-02-C2H1-D034	Alead/Aristotle	2	Dipole	x	x	x	150 mm
3	RFA-02-D3	Alead/Aristotle	2	Dipole	x	x	x	150 mm
4	RFDPA870920IMLB301	WALSIN	1.84	Dipole	x	x	x	200 mm
5	RFDPA870920IMAB302	WALSIN	1.82	Dipole	x	x	x	200 mm/Black
6	RFDPA870920IMAB305	WALSIN	1.82	Dipole	x	x	x	200 mm/Grey
7	RFDPA870910IMAB308	WALSIN	1.84	Dipole	x	x	x	100 mm
8	RFA-02-C2M2	Alead/Aristotle	2	Dipole	x	x	x	RP-SMA(2)(3) to U.FL cable length of 100 mm
9	RFA-02-C2M2-SMA-D034	Alead/Aristotle	2	Dipole	—	—	x	SMA to U.FL cable length of 100 mm
10	RN-SMA-S-RP	Microchip	0.56	Dipole	x	x	x	RP-SMA(2)(3) to U.FL cable length of 100 mm
11	RN-SMA-S	Microchip	0.56	Dipole	—	—	x	SMA to U.FL cable length of 100 mm

Note 1: 'x' denotes the antennas covered under the certification.

2: If the end-product using the Module is designed to have an antenna port that is accessible to the end-user than a unique (non-standard) antenna connector (as permissible by FCC) must be used (e.g., RP (Reverse Polarity)-SMA socket).

3: If an RF coaxial cable is used between the module RF output and the enclosure, than a unique (non-standard) antenna connector must be used in the enclosure wall to interface with antenna.

4: Contact the antenna vendor for detailed antenna specifications to review its suitability to the end-product operating environment and to identify alternatives.

3.7 WFI32E01 Module Reflow Profile Information

The WFI32E01 module was assembled using the IPC/ JEDEC J-STD-020 Standard lead free reflow profile. The WFI32E01 module can be soldered to the host board using standard leaded or lead free solder reflow profiles. To avoid damaging the module, adhere to the following recommendations:

- For Solder Reflow Recommendations, refer to the Solder Reflow Recommendation Application Note (AN233).
- Do not exceed a peak temperature (TP) of 250°C.
- Refer to the solder paste data sheet for specific reflow profile recommendations from the vendor.
- Use no-clean flux solder paste.
- Do not wash as moisture can be trapped under the shield.
- Use only one flow. If the PCB requires multiple flows, apply the module on the final flow.

3.7.1 CLEANING

The Exposed GND pad helps to self-align the module, avoiding pad misalignment. The use of no clean solder pastes is recommended. Full drying of no-clean paste fluxes as a result of the reflow process must be ensured. This may require longer reflow profiles and/or peak temperatures toward the high end of the process window as recommended by the solder paste vendor. The uncured flux residues may lead to corrosion and/or shorting in accelerated testing and possibly the field.

3.8 WFI32E01 Module Assembly Considerations

The WFI32E01 module is assembled with an EMI shield to ensure compliance with EMI emission and immunity rules. The EMI shield is made of a tin-plated

 © 2020 Microchip Technology Inc.

steel (SPTE) and is not hermetically sealed. Solutions such as IPA and similar solvents can be used to clean this module. Cleaning solutions containing acid must never be used on the module.

3.8.1 CONFORMAL COATING

The modules are not intended for use with a conformal coating and the customer assumes all risks (such as the module reliability, performance degradation and so on) if a conformal coating is applied to the modules.

 © 2020 Microchip Technology Inc.

4.0 CPU

Note 1: This data sheet summarizes the features of the PIC32MZ W1 family of devices. It is not intended to be a comprehensive reference source. To complement the information in this data sheet, refer to **Section 50. "CPU for Devices with MIPS32® microAptiv™ and M-Class Cores"** (DS60001192) of the *"PIC32 Family Reference Manual"*, which is available from the Microchip website (www.microchip.com/PIC32).

2: The Series 5 Warrior M-class CPU core resources are available at: www.imgtec.com.

The MIPS32® M-Class Microprocessor Core is the heart of the PIC32MZ W1. The CPU fetches instructions, decodes each instruction, fetches source operands, executes each instruction and writes the results of instruction execution to the proper destinations.

Key features include:

- 5-stage pipeline
- 32-bit address and data paths
- MIPS32 enhanced architecture (release 5):
  - Multiply-accumulate and multiply-subtract instructions
  - Targeted multiply instruction
  - Zero/onedetectinstructions
  - `WAIT` instruction
  - Conditional move instructions (`MOVN`, `MOVZ`)
  - Vectored interrupts
  - Programmable exception vector base
  - Atomic interrupt enable/disable
  - GPR shadow registers to minimize latency for interrupt handlers
  - Bit field manipulation instructions
  - Virtual memory support
- microMIPS™ compatible instruction set:
  - Improves code size density over MIPS32, while maintaining MIPS32 performance.
  - Supports all MIPS32 instructions (except branch-likely instructions)
  - Fifteen additional 32-bit instructions and thirty-nine 16-bit instructions corresponding to commonly-used MIPS32 instructions
  - Stack Pointer implicit in instruction
  - MIPS32 assembly and Application Binary Interface (ABI) compatible
- MIPS32 ISA mode for legacy compatibility
- MCU ASE 1(Application Specific Extension 1):
  - Increases the number of interrupt hardware inputs from 6 to 8 for Vectored Interrupt (VI) mode, and from 63 to 255 for External Interrupt Controller (EIC) mode.
  - Separate priority and vector generation.
  - 16-bit vector address is provided.
  - Hardware assist combined with the use of shadow register sets to reduce interrupt latency during the prologue and epilogue of an interrupt.
  - An interrupt return with automated interrupt epilogue handling instruction (`IRET`) improves interrupt latency.
  - Supports optional interrupt chaining.
  - Two memory-to-memory atomic read-modify-write instructions (`ASET` and `ACLR`) eases commonly used semaphore manipulation in MCU applications. Interrupts are automatically disabled during the operation to maintain coherency.
- MMU with simple FMT mechanism:
  - FMT performs virtual-to-physical address translation
  - Provides attributes for the different segments
- Separate L1 data and instruction caches:
  - 16 Kbyte 4 way set associative instruction cache (I-Cache)
  - 16 Kbyte 4 way set associative data cache (D-Cache)
- Autonomous Multiply/Divide Unit (MDU):
  - Maximum issue rate of one 32x32 multiply per clock
  - Early-in iterative divide. Minimum 12 and maximum 38 clock latency (dividend (*rs*) sign extension-dependent)
- Power control:
  - Minimum frequency: 0 MHz
  - Low-Power mode (triggered by `WAIT` instruction)
  - Extensive use of local gated clocks
- EJTAG debug and instruction trace:
  - Support for single stepping
  - Virtual instruction and data address/value breakpoints
  - Hardware breakpoint supports both address match and address range triggering.
  - Eight instruction and four data complex breakpoints
- iFlowtrace® version 2.0 support:
  - Real-time instruction program counter
  - Special events trace capability
  - Two performance counters with 34 user-selectable countable events
  - Disabled if the processor enters Debug mode
  - Program counter sampling
- Eight watch registers:
  - Instruction, data read, data write options
  - Address match masking options
- DSP ASE extension:
  - Native fractional format data type operations
  - Register Single Instruction Multiple Data (SIMD)

operations (add, subtract, multiply, and shift)
- GPR-based shift
- Bit manipulation
- Compare-pick
- DSP control access
- Indexed-load
- Branch
- Multiplication of complex operands
- Variable bit insertion and extraction
- Virtual circular buffers
- Arithmetic saturation and overflow handling
- Zero-cycle overhead saturation and rounding operations

A block diagram of the PIC32MZ W1 processor core is shown in Figure 4-1.

FIGURE 4-1: PIC32MZ W1 MICROPROCESSOR CORE BLOCK DIAGRAM

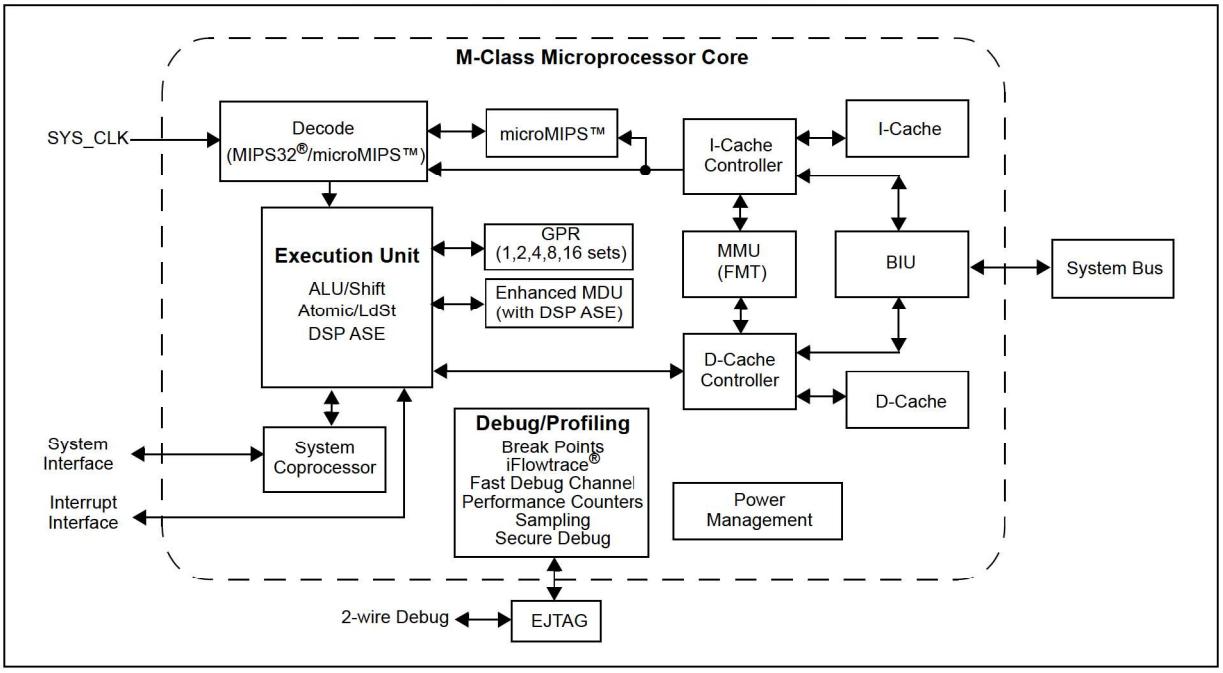

4.1 Architecture Overview

The MIPS32 M-Class Microprocessor Core in PIC32MZ W1 contains several logic blocks working together in parallel, providing an efficient high-performance computing engine. The following blocks are included with the core:

- Execution unit
- General Purpose Register (GPR)
- Multiply/Divide Unit (MDU)
- System control coprocessor (CP0)
- Memory Management Unit (MMU)
- Instruction/data cache controllers
- Power management
- Instructions and data caches
- microMIPS support
- Enhanced JTAG (EJTAG) controller

4.1.1 EXECUTION UNIT

The processor core execution unit implements a load/store architecture with single-cycle Arithmetic Logic Unit (ALU) operations (logical, shift, add, subtract) and an autonomous multiply/divide unit. The core contains thirty-two 32-bit GPRs used for integer operations and address calculation. Seven additional register file shadow sets (containing 32 registers) are added to minimize context switching overhead during interrupt/exception processing. The register file consists of two read ports and one write port and is fully bypassed to minimize operation latency in the pipeline.

The execution unit includes:

- 32-bit adder for calculating the data address
- Address unit for calculating the next instruction address
- Logic for branch determination and branch target address calculation
- Load aligner
- Trap condition comparator
- Bypass multiplexers for avoiding stalls when executing instruction streams where data producing instructions are followed closely by results

 © 2020 Microchip Technology Inc.

- Leading zero/one detect unit for implementing the CLZ and CLO instructions
- ALU for performing arithmetic and bitwise logical operations
- Shifter and store aligner
- DSP ALU and logic block for performing DSP instructions, such as arithmetic/shift/compare operations

4.1.2 MULTIPLY/DIVIDE UNIT

The processor core includes an MDU that contains a separate pipeline for multiply and divide operations, and DSP ASE multiply instructions. This pipeline operates in parallel with the Integer Unit (IU) pipeline and does not stall when the IU pipeline stalls. This allows MDU operations to be partially masked by system stalls and/or other integer unit instructions.

The high-performance MDU consists of a 32x32 booth recoded multiplier, four pairs of result/accumulation registers (HI and LO), a divide state machine, and the necessary multiplexers and control logic. The first number shown ('32' of 32x32) represents the *rs* operand. The second number ('32' of 32x32) represents the *rt* operand.

The MDU supports execution of one multiply or multiply-accumulate operation every clock cycle. Divide operations are implemented with a simple 1-bit-per-clock iterative algorithm. An early-in detection checks the sign extension of the dividend (*rs*) operand. If *rs* is 8 bits wide, 23 iterations are skipped. For a 16-bit wide *rs*, 15 iterations are skipped and for a 24-bit wide *rs*, 7 iterations are skipped. Any attempt to issue a subsequent MDU instruction while a divide is still active causes an IU pipeline stall until the divide operation is completed.

Table 4-1 lists the repeat rate (peak issue rate of cycles until the operation can be reissued) and latency (number of cycles until a result is available) for the processor core multiply and divide instructions. The approximate latency and repeat rates are listed in terms of pipeline clocks.

TABLE 4-1: MIPS32® M-CLASS MICROPROCESSOR CORE HIGH-PERFORMANCE INTEGER MDU LATENCIES AND REPEAT RATES

Opcode	Operand Size (mul *rt*) (div *rs*)	Latency	Repeat Rate
MULT/MULTU, MADD/MADDU, MSUB/MSUBU (HI/LO destination)	16 bits	5	1
	32 bits	5	1
MUL (GPR destination)	16 bits	5	1
	32 bits	5	1
DIV/DIVU	8 bits	12/14	12/14
	16 bits	20/22	20/22
	24 bits	28/30	28/30
	32 bits	36/38	36/38

The MIPS architecture defines that the result of a multiply or divide operation be placed in one of four pairs of HI and LO registers. Using the Move-From-HI (MFHI) and Move-From-LO (MFLO) instructions, these values can be transferred to the GPR.

In addition to the HI/LO targeted operations, the MIPS32 architecture also defines a Multiply instruction (MUL), which places the least significant results in the primary register file instead of the HI/LO register pair. By avoiding the explicit MFLO instruction required when using the LO register, and by supporting multiple destination registers, the throughput of multiply-intensive operations is increased.

Two other instructions, Multiply-Add (MADD) and Multiply-Subtract (MSUB), are used to perform the multiply-accumulate and multiply-subtract operations. The MADD instruction multiplies two numbers and then adds the product to the current contents of the HI and LO registers. Similarly, the MSUB instruction multiplies two operands and then subtracts the product from the HI and LO registers. The MADD and MSUB operations are commonly used in DSP algorithms.

The MDU also implements various shift instructions operating on the HI/LO register and multiply instructions as defined in the DSP ASE. The MDU supports all of the data types required for this purpose and includes three extra HI/LO registers as defined by the ASE.

Table 4-2 lists the latencies and repeat rates for the DSP multiply and dot-product operations. The approximate latencies and repeat rates are listed in terms of pipeline clocks.

TABLE 4-2: DSP-RELATED LATENCIES AND REPEAT RATES

Opcode	Latency	Repeat Rate
Multiply and dot-product without saturation after accumulation	5	1
Multiply and dot-product with saturation after accumulation	5	1
Multiply without accumulation	5	1

4.1.3 SYSTEM CONTROL COPROCESSOR (CP0)

In the MIPS architecture, CP0 is responsible for the virtual-to-physical address translation and cache protocols, the exception control system, the processor's diagnostics capability, the operating modes (Kernel, User and Debug) and whether interrupts are enabled or disabled. Configuration information, such as cache size and set associativity, and the presence of options like microMIPS is also available by accessing the CP0 registers, as listed in Table 4-3. Refer to the *Series 5 Warrior M-class CPU core* resources which are available at: www.imgtec.com for more information.

TABLE 4-3: COPROCESSOR 0 REGISTERS

Register Number	Register Name	Function
0	Index	Index into the TLB array (MPU only).
1	Random	Randomly generated index into the TLB array (MPU only).
2	EntryLo0	Low-order portion of the TLB entry for even-numbered virtual pages (MPU only).
3	EntryLo1	Low-order portion of the TLB entry for odd-numbered virtual pages (MPU only).
4	Context/ UserLocal	Pointer to the page table entry in memory (MPU only). User information that can be written by privileged software and read through the RDHWR instruction.
5	PageMask/ PageGrain	PageMask controls the variable page sizes in TLB entries. PageGrain enables support of 1 KB pages in the TLB (MPU only).
6	Wired	Controls the number of fixed (i.e., wired) TLB entries (MPU only).
7	HWREna	Enables access through the RDHWR instruction to selected hardware registers in Non-privileged mode.
8	BadVAddr	Reports the address for the most recent address-related exception.
	BadInstr	Reports the instruction that caused the most recent exception.
	BadInstrP	Reports the branch instruction if a delay slot caused the most recent exception.
9	Count	Processor cycle count.
10	EntryHi	High-order portion of the TLB entry (MPU only).
11	Compare	Core timer interrupt control.
12	Status	Processor status and control.
	IntCtl	Interrupt control of vector spacing.
	SRSCtl	Shadow register set control.
	SRSMap	Shadow register mapping control.
	View_IPL	Allows the Priority Level to be read/written without extracting or inserting that bit from/to the Status register.
	SRSMAP2	Contains two 4-bit fields that provide the mapping from a vector number to the shadow set number to use when servicing such an interrupt.
	GuestCtl0	Control of virtualized Guest OS
	GTOffset	Guest Timer Offset
13	Cause	Describes the cause of the last exception.
	NestedExc	Contains the error and exception level status bit values that existed prior to the current exception.
	View_RIPL	Enables read access to the RIPL bit that is available in the Cause register.
14	EPC	Program counter at last exception.
	NestedEPC	Contains the exception program counter that existed prior to the current exception.
15	PRID	Processor identification and revision
	Ebase	Exception base address of exception vectors.
	CDMMBase	Common device memory map base.

 © 2020 Microchip Technology Inc.

TABLE 4-3: COPROCESSOR 0 REGISTERS (CONTINUED)

Register Number	Register Name	Function
16	Config	Configuration register.
	Config1	Configuration register 1.
	Config2	Configuration register 2.
	Config3	Configuration register 3.
	Config4	Configuration register 4.
	Config5	Configuration register 5.
	Config7	Configuration register 7.
17	LLAddr	Load link address (MPU only).
18	WatchLo	Low-order watchpoint address (MPU only).
19	WatchHi	High-order watchpoint address (MPU only).
20-22	Reserved	Reserved in the PIC32 core.
23	Debug	EJTAG debug register.
	TraceControl	EJTAG trace control.
	TraceControl2	EJTAG trace control 2.
	UserTraceData1	EJTAG user trace data 1 register.
	TraceBPC	EJTAG trace breakpoint register.
	Debug2	Debug control/exception status 1.
24	DEPC	Program counter at last debug exception.
	UserTraceData2	EJTAG user trace data 2 register.
25	PerfCtl0	Performance counter 0 control.
	PerfCnt0	Performance counter 0.
	PerfCtl1	Performance counter 1 control.
	PerfCnt1	Performance counter 1.
26	ErrCtl	Software test enable of way-select and data RAM arrays for I-Cache and D-Cache (MPU only).
27	Reserved	Reserved in the PIC32 core.
28	TagLo/DataLo	Low-order portion of cache tag interface (MPU only).
29	Reserved	Reserved in the PIC32 core.
30	ErrorEPC	Program counter at last error exception.
31	DeSave	Debug exception save.
	KScratchn	Scratch registers for Kernel mode

4.2 Power Management

The processor core offers a number of power management features, including low-power design, active power management and power-down modes of operation. The core is a static design that supports slowing or halting the clocks, which reduces system power consumption during Idle periods.

4.2.1 INSTRUCTION-CONTROLLED POWER MANAGEMENT

The mechanism for invoking Power-Down mode is through execution of the `WAIT/SLEEP` instruction. For more information on power management, see **Section 36.0 "Power-Saving Features"**.

4.2.2 LOCAL CLOCK GATING

The majority of the power consumed by the processor core is in the clock tree and clocking registers. The PIC32MZ W1 family makes extensive use of local gated-clocks to reduce this dynamic power consumption.

4.3 L1 Instruction and Data Caches

4.3.1 INSTRUCTION CACHE (I-CACHE)

The I-Cache is an on-core memory block of 16 Kbytes. As the I-Cache is virtually indexed, the virtual-to-physical address translation occurs in parallel with the cache access rather than having to wait for the physical address translation. The tag holds 22 bits of physical address, a valid bit, and a lock bit. The Least Recently Used (LRU) replacement bits are stored in a separate array.

The I-Cache block also contains and manages the instruction line fill buffer. Besides accumulating data to be written to the cache, instruction fetches that reference data in the line fill buffer are serviced either by a bypass of that data, or data coming from the external interface. The I-Cache control logic controls the bypass function.

The processor core supports I-Cache locking. Cache locking allows critical code or data segments to be locked into the cache on a per-line basis, enabling the system programmer to maximize the efficiency of the system cache.

The cache locking function is always available on all I-Cache entries. Entries can then be marked as locked or unlocked on a per entry basis using the CACHE instruction.

4.3.2 DATA CACHE (D-CACHE)

The D-Cache is an on-core memory block of 16 Kbytes. This virtually indexed, physically tagged cache is protected. As the D-Cache is virtually indexed, the virtual-to-physical address translation occurs in parallel with the cache access. The tag holds 22 bits of physical address, a valid bit, and a lock bit. There is an additional array holding dirty bits and LRU replacement algorithm bits for each set of the cache.

In addition to I-Cache locking, the processor core also supports a D-Cache locking mechanism identical to the I-Cache. Critical data segments are locked into the cache on a per-line basis. The locked contents can be updated on a store hit, but cannot be selected for replacement on a cache miss.

The D-Cache locking function is always available on all D-Cache entries. Entries can then be marked as locked or unlocked on a per-entry basis using the CACHE instruction.

4.3.3 ATTRIBUTES

The processor core I-Cache and D-Cache attributes are listed in the Configuration registers (see Register 4-1 through Register 4-4).

4.4 EJTAG Debug Support

The processor core provides for an Enhanced JTAG (EJTAG) interface for use in the software debug of application and kernel code. In addition to standard User mode and Kernel modes of operation, the processor core provides a Debug mode that is entered after a debug exception (derived from a hardware breakpoint, single-step exception, and so on) is taken and continues until a Debug Exception Return (DERET) instruction is executed. During this time, the processor executes the debug exception handler routine.

The EJTAG interface operates through the Test Access Port (TAP), a serial communication port used for transferring test data in and out of the core. In addition to the standard JTAG instructions, special instructions defined in the EJTAG specification specify which registers are selected and how they are used.

4.5 MIPS DSP ASE Extension

The MIPS DSP ASE Revision 2 is an extension to the MIPS32 architecture. This extension comprises new integer instructions and states that include new HI/LO accumulator register pairs and a DSP control register. This extension is crucial in a wide range of DSP, multimedia, and DSP-like algorithms covering audio and video processing applications. The extension supports native fractional format data type operations, register SIMD operations, such as add, subtract, multiply, and shift. In addition, the extension includes the following features that are essential in making DSP algorithms computationally efficient:

- Support for multiplication of complex operands
- Variable bit insertion and extraction
- Implementation and use of virtual circular buffers
- Arithmetic saturation and overflow handling support
- Zero cycle overhead saturation and rounding operations

4.6 microMIPS ISA

The processor core supports the microMIPS ISA, which contains all MIPS32 ISA instructions (except for branch-likely instructions) in a new 32-bit encoding scheme, with some of the commonly used instructions also available in 16-bit encoded format. This ISA improves code density through the additional 16-bit instructions while maintaining a performance similar to MIPS32 mode. In microMIPS mode, 16-bit or 32-bit instructions will be fetched and recoded to legacy MIPS32 instruction opcodes in the pipeline's I stage, so that the processor core can have the same microAptiv UP microarchitecture. The microMIPS instruction stream can be intermixed with 16-bit halfword or 32-bit word size instructions on halfword or word boundaries, additional logic is in place to address the word misalignment issues, thus minimizing performance loss.

 © 2020 Microchip Technology Inc.

4.7 M-Class Core Configuration

Register 4-1 through Register 4-4 show the default configuration of the M-Class core, which is included on the PIC32MZ W1.

REGISTER 4-1: CONFIG: CONFIGURATION REGISTER; CP0 REGISTER 16, SELECT 0

Bit Range	Bit 31/23/15/7	Bit 30/22/14/6	Bit 29/21/13/5	Bit 28/20/12/4	Bit 27/19/11/3	Bit 26/18/10/2	Bit 25/17/9/1	Bit 24/16/8/0
31:24	R-1	U-0	U-0	U-0	U-0	U-0	U-0	R-0
	—	—	—	—	—	—	—	ISP
23:16	R-0	R-0	R-1	R-0	U-0	R-1	R-0	R-0
	DSP	UDI	SB	MDU	—	MM[1:0]		BM
15:8	R-0	R-0	R-0	R-0	R-0	R-1	R-0	R-0
	BE	AT[1:0]		AR[2:0]			MT[2:1]	
7:0	R-1	U-0	U-0	U-0	U-0	R/W-0	R/W-1	R/W-0
	MT[0]	—	—	—	—	K0[2:0]		

Legend:	r = Reserved bit		
R = Readable bit	W = Writable bit	U = Unimplemented bit, read as '0'	
-n = Value at POR	'1' = Bit is set	'0' = Bit is cleared	x = Bit is unknown

bit 31 **Reserved**: This bit is hardwired to '1' to indicate the presence of the Config1 register.

bit 30-25 **Unimplemented:** Read as '0'.

bit 24 **ISP:** Instruction Scratch Pad RAM bit
0 = Instruction scratch pad RAM is not implemented

bit 23 **DSP:** Data Scratch Pad RAM bit
0 = Data scratch pad RAM is not implemented

bit 22 **UDI:** User-defined bit
0 = CorExtend user-defined instructions are not implemented

bit 21 **SB:** SimpleBE bit
1 = Only simple byte enables are allowed on the internal bus interface

bit 20 **MDU:** Multiply/Divide Unit bit
0 = Fast, high-performance MDU
1 = Iterative, area-efficient MDU

bit 19 **Unimplemented:** Read as '0'

bit 18-17 **MM[1:0]:** Merge Mode bits
10 = Merging is allowed
x1 = Reserved

bit 16 **BM:** Burst Mode bit
0 = Burst order is sequential

bit 15 **BE:** Endian Mode bit
0 = Little-endian

bit 14-13 **AT[1:0]:** Architecture Type bits
00 = MIPS32

bit 12-10 **AR[2:0]:** Architecture Revision Level bits
001 = MIPS32 release 2

bit 9-7 **MT[2:0]:** MMU Type bits
011 = Fixed Mapping

bit 6-3 **Unimplemented:** Read as '0'

REGISTER 4-1: CONFIG: CONFIGURATION REGISTER; CP0 REGISTER 16, SELECT 0 (CONTINUED)

bit 2-0 **K0[2:0]:** Kseg0 Coherency Algorithm bits
011 = Cacheable, non-coherent, write-back, write allocate
010 = Uncached
001 = Cacheable, non-coherent, write-through, write allocate
000 = Cacheable, non-coherent, write-through, no write allocate
All other values are not used and mapped to other values. 100, 101, and 110 are mapped to 010. 111 is mapped to 010.

 © 2020 Microchip Technology Inc.

REGISTER 4-2: CONFIG1L: CONFIGURATION REGISTER 1

Bit Range	Bit 31/23/15/7	Bit 30/22/14/6	Bit 29/21/13/5	Bit 28/20/12/4	Bit 27/19/11/3	Bit 26/18/10/2	Bit 25/17/9/1	Bit 24/16/8/0
31:24	R-1	R-0	R-0	R-0	R-0	R-0	R-0	R-0
	—	—	—	—	—	—	—	IS[2]
23:16	R-1	R-0	R-0	R-1	R-1	R-0	R-1	R-1
	IS[1:0]		IL[2:0]			IA[2:0]		
15:8	R-0	R-0	R-0	R-0	R-1	R-1	R-0	R-1
	DS[2:0]			DL[2:0]			DA[2:0]	
7:0	R-1	U-0	U-0	R-1	R-1	R-0	R-1	R-0
	FCPRI	—	—	PC	WR	CA	EP	FP

Legend:	r = Reserved bit		
R = Readable bit	W = Writable bit	U = Unimplemented bit, read as '0'	
-n = Value at POR	'1' = Bit is set	'0' = Bit is cleared	x = Bit is unknown

bit 31 **Reserved:** This bit is hardwired to a '1' to indicate the presence of the Config2 register.

bit 30-25 **Unimplemented:** Read as '0'

bit 24-22 **IS[2:0]**: Instruction Cache Sets bits
0x2: 256
0x5 - 0x7: Reserved

bit 21-19 **IL[2:0]:** Instruction-Cache Line bits
000 = No I-Cache present
011 = Contains instruction cache line size of 16 bytes
0x1, 0x2, 0x4 - 0x7: Reserved

bit 18-16 **IA[2:0:** Instruction-Cache Associativity bits
0x00 - 0x02: Reserved
0x3: 4-way
0x4 - 0x7: Reserved

bit 15-13 **DS[2:0]:** Data-Cache Sets bits
0x2: 256
0x5 - 0x7: Reserved

bit 12-10 **DL[2:0]:** Data-Cache Line bits
0x0: No D-Cache present
0x3: 16 bytes
0x1, 0x2, 0x4 - 0x7: Reserved

bit 9-7 **DA[2:0]:** Data-Cache Associativity bits
0x00 - 0x02: Reserved
0x3: 4-way
0x4 - 0x7: Reserved

bit 6-5 **Unimplemented:** Read as '0'

bit 4 **PC:** Performance Counter bit
1 = The processor core contains performance counters

bit 3 **WR:** Watch Register Presence bit
1 = No Watch registers are present

bit 2 **CA:** Code Compression Implemented bit
0 = No MIPS16e® present

bit 1 **EP:** EJTAG Present bit
1 = Core implements EJTAG

bit 0 **FP:** Floating Point Unit bit
0 = No FPU

REGISTER 4-3: CONFIG3: CONFIGURATION REGISTER 3; CP0 REGISTER 16, SELECT 3

Bit Range	Bit 31/23/15/7	Bit 30/22/14/6	Bit 29/21/13/5	Bit 28/20/12/4	Bit 27/19/11/3	Bit 26/18/10/2	Bit 25/17/9/1	Bit 24/16/8/0
31:24	R-1	U-0	U-0	U-0	U-0	U-0	U-0	U-0
	—	—	—	—	—	—	—	—
23:16	U-0	R-0	R-1	R-0	R-0	R-0	R-1	R/W-y
	—	IPLW[1:0]		MMAR[2:0]			MCU	ISAONEXC(1)
15:8	R-y	R-y	R-1	R-1	R-1	R-1	U-0	R-1
	ISA[1:0](1)		ULRI	RXI	DSP2P	DSPP	—	ITL
7:0	R-0	R-1	R-1	U-0	R-1	U-0	U-0	R-1
	LPA	VEIC	VINT	—	CDMM	—	—	TL

Legend:	r = Reserved bit	y = Value set from Configuration bits on POR
R = Readable bit	W = Writable bit	U = Unimplemented bit, read as '0'
-n = Value at POR	'1' = Bit is set	'0' = Bit is cleared x = Bit is unknown

bit 31 **Reserved:** This bit is hardwired as '1' to indicate the presence of the Config4 register.

bit 30-23 **Unimplemented**: Read as '0'

bit 22-21 **IPLW[1:0]:** Width of the Status IPL and Cause RIPL bits
01 = IPL and RIPL bits are 8-bits in width
Others = Reserved

bit 20-18 **MMAR[2:0]:** microMIPS Architecture Revision Level bits
000 = Release 1
Others = Reserved

bit 17 **MCU:** MIPS® MCU™ ASE Implemented bit
0 = MCU ASE is not implemented
1 = MCU ASE is implemented

bit 16 **ISAONEXC:** ISA on Exception bit(1)
1 = microMIPS is used on entrance to an exception vector
0 = MIPS32 ISA is used on entrance to an exception vector

bit 15-14 **ISA[1:0]:** Instruction Set Availability bits(1)
00 = Only MIPS32 is implemented
01 = Only microMIPS is implemented
11 = Both MIPS32 and microMIPS are implemented; microMIPS is used when coming out of Reset
10 = Both MIPS32 and microMIPS are implemented; MIPS32 ISA used when coming out of Reset

bit 13 **ULRI:** UserLocal Register Implemented bit
1 = UserLocal Coprocessor 0 register is implemented

bit 12 **RXI:** RIE and XIE Implemented in PageGrain bit
0 = RIE and XIE bits are not implemented
1 = RIE and XIE bits are implemented

bit 11 **DSP2P:** MIPS DSP ASE Revision 2 Presence bit
1 = DSP revision 2 is present

bit 10 **DSPP:** MIPS DSP ASE Presence bit
1 = DSP is present

bit 9 **Unimplemented**: Read as '0'

bit 8 **ITL:** Indicates that iFlowtrace® hardware is present
1 = iFlowtrace® is implemented in the core

bit 7 **LPA:** Denotes the presence of support for large physical addresses on MIPS64 processors. Not used by MIPS32 processors and returns zero on read.
0 = Large physical address support is not implemented

bit 6 **VEIC**: External Vector Interrupt Controller bit
1 = Support for an external interrupt controller is implemented

bit 5 **VINT**: Vector Interrupt bit
1 = Vector interrupts are implemented

Note 1: These bits are set based on the value of the BOOTISA Configuration bit (BCFG0[3]).

 © 2020 Microchip Technology Inc.

REGISTER 4-3: CONFIG3: CONFIGURATION REGISTER 3; CP0 REGISTER 16, SELECT 3 (CONTINUED)

bit 4 **Unimplemented**: Read as '0'

bit 3 **CDMM**: Common Device Memory Map bit
0 = CDMM is not implemented
1 = CDMM is implemented

bit 2-1 **Unimplemented**: Read as '0'

bit 0 **TL**: Trace Logic bit
1 = Trace logic is implemented

Note 1: These bits are set based on the value of the BOOTISA Configuration bit (BCFG0[3]).

REGISTER 4-4: CONFIG5: CONFIGURATION REGISTER 5; CP0 REGISTER 16, SELECT 5

Bit Range	Bit 31/23/15/7	Bit 30/22/14/6	Bit 29/21/13/5	Bit 28/20/12/4	Bit 27/19/11/3	Bit 26/18/10/2	Bit 25/17/9/1	Bit 24/16/8/0
31:24	R-0	U-0	U-0	U-0	U-0	U-0	U-0	U-0
	—	—	—	—	—	—	—	—
23:16	U-0	U-0	U-0	U-0	U-0	U-0	U-0	U-0
	—	—	—	—	—	—	—	—
15:8	U-0	U-0	U-0	U-0	U-0	U-0	U-0	U-0
	—	—	—	—	—	—	—	—
7:0	U-0	U-0	U-0	U-0	U-0	U-0	U-0	R-1
	—	—	—	—	—	—	—	NF

Legend:	r = Reserved		
R = Readable bit	W = Writable bit	U = Unimplemented bit, read as '0'	
-n = Value at POR	'1' = Bit is set	'0' = Bit is cleared	x = Bit is unknown

bit 31 **M**: This bit is reserved to indicate that a Config5 register is present. With the current architectural definition, this bit should always read as a 0.

bit 30-1 **Unimplemented**: Read as '0'

bit 0 **NF:** Nested Fault bit
1 = Nested Fault feature is implemented

REGISTER 4-5: CONFIG7: CONFIGURATION REGISTER 7; CP0 REGISTER 16, SELECT 7

Bit Range	Bit 31/23/15/7	Bit 30/22/14/6	Bit 29/21/13/5	Bit 28/20/12/4	Bit 27/19/11/3	Bit 26/18/10/2	Bit 25/17/9/1	Bit 24/16/8/0
31:24	R-1	U-0	U-0	U-0	U-0	U-0	U-0	U-0
	WII	—	—	—	—	—	—	—
23:16	U-0	U-0	U-0	U-0	U-0	U-0	U-0	U-0
	—	—	—	—	—	—	—	—
15:8	U-0	U-0	U-0	U-0	U-0	U-0	U-0	U-0
	—	—	—	—	—	—	—	—
7:0	U-0	U-0	U-0	U-0	U-0	U-0	U-0	U-0
	—	—	—	—	—	—	—	—

Legend:			
R = Readable bit	W = Writable bit	U = Unimplemented bit, read as '0'	
-n = Value at POR	'1' = Bit is set	'0' = Bit is cleared	x = Bit is unknown

bit 31 **WII:** Wait IE Ignore bit
1 = Indicates that this processor will allow an interrupt to unblock a `WAIT` instruction

bit 30-0 **Unimplemented:** Read as '0'

 © 2020 Microchip Technology Inc.

5.0 FLASH PROGRAM MEMORY

Note:	This data sheet summarizes the features of the PIC32MZ W1 family of devices. It is not intended to be a comprehensive reference source. To complement the information in this data sheet, refer to **Section 5. Flash Programming (DS60001640)** in the *"PIC32MZ W1 Family Reference Manual"*, which is available from the Microchip web site (www.microchip.com/PIC32).

PIC32MZ W1 device contains an internal Flash program memory for executing user code, which includes the following features:

- Write protection for program and boot Flash
- Error-correction code (ECC) support
- Supports chip and page erase
- Supports Single Word, Quad Word and row program options
- Flash page size is 4 Kbytes (1K Instruction Word (IW))
- Row size is 1 KB (256 IW)

The user can program this memory using the following methods:

- Run-Time Self-Programming (RTSP)
- Enhanced JTAG (EJTAG) programming
- In-Circuit Serial Programming™ (ICSP™)

RTSP is performed by software, executing from either Flash or RAM memory. Information about RTSP techniques is available in **Section 5. Flash Programming (DS60001640)** in the *"PIC32MZ W1 Family Reference Manual"*.

EJTAG is performed using the EJTAG port of the device and an EJTAG capable programmer.

ICSP is performed using a serial data connection to the device and allows much faster programming times than RTSP.

The EJTAG and ICSP methods are described in the *"PIC32 Flash Programming Specification"* (DS60001145), which is available for download from the Microchip web site (www.microchip.com).

5.1 Flash Control Registers

TABLE 5-1: FLASH CONTROLLER REGISTER MAP

Virtual Address (BF80_#)	Register Name	Bit Range	Bits																All Resets
			31/15	30/14	29/13	28/12	27/11	26/10	25/9	24/8	23/7	22/6	21/5	20/4	19/3	18/2	17/1	16/0	
600	NVMCON(1)	31:16	—	—	—	—	—	—	—	—	—	—	—	—	—	—	—	—	0000
		15:00	WR	WREN	WRERR	LVDERR	—	—	—	HTDPGM	—	—	—	—	NVMOP[3:0]				00x0
610	NVMCON2	31:16	ERS[3:0]				—	—	—	SLEEP	—	—	—	WS[4:0]					011F
		15:00	—	TEMP	CREAD1	VREAD1	—	—	RETRY[1:0]		—	—	—	—	—	—	—	—	x000
620	NVMKEY	31:16	NVMKEY[31:0]																0000
		15:00																	0000
630	NVMADDR(1)	31:16	NVMADDR[31:0]																0000
		15:00																	0000
640	NVMDATA0	31:16	NVMDATA0[31:0]																0000
		15:00																	0000
650	NVMDATA1	31:16	NVMDATA1[31:0]																0000
		15:00																	0000
660	NVMDATA2	31:16	NVMDATA2[31:0]																0000
		15:00																	0000
670	NVMDATA3	31:16	NVMDATA3[31:0]																0000
		15:00																	0000
680	NVMDATA4	31:16	NVMDATA4[31:0]																0000
		15:00																	0000
690	NVMDATA5	31:16	NVMDATA5[31:0]																0000
		15:00																	0000
6A0	NVMDATA6	31:16	NVMDATA6[31:0]																0000
		15:00																	0000
6B0	NVMDATA7	31:16	NVMDATA7[31:0]																0000
		15:00																	0000
6C0	NVMSRC ADDR	31:16	NVMSRCADDR[31:0]																0000
		15:00																	0000
6D0	NVMPWPLT	31:16	ULOCK	—	—	—	—	—	—	—	PWPLT[23:16]								8000
		15:00	PWPLT[15:0]																0000
6E0	NVMPWPGTE	31:16	ULOCK	—	—	—	—	—	—	—	PGTE[23:16]								80FF
		15:00	PGTE[15:0]																FFFF
6F0	NVMLBWP(1)	31:16	ULOCK	—	—	—	—	—	—	LBWP23	LBWP22	LBWP21	LBWP20	LBWP19	LBWP18	LBWP18	LBWP17	LBWP16	80FF
		15:00	LBWP15	LBWP14	LBWP13	LBWP12	LBWP11	LBWP10	LBWP9	LBWP8	LBWP7	LBWP6	LBWP5	LBWP4	LBWP3	LBWP2	LBWP1	LBWP0	FFFF
700	NVMUBWP(1)	31:16	ULOCK	—	—	—	—	—	—	UBWP23	UBWP22	UBWP21	UBWP20	UBWP19	UBWP18	UBWP18	UBWP17	UBWP16	80FF
		15:00	UBWP15	UBWP14	UBWP13	UBWP12	UBWP11	UBWP10	UBWP9	UBWP8	UBWP7	UBWP6	UBWP5	UBWP4	UBWP3	UBWP2	UBWP1	UBWP0	FFFF

Legend: x = unknown value on Reset; — = unimplemented, read as '0'. Reset values are shown in hexadecimal.

Note 1: This register has corresponding CLR, SET and INV registers at their virtual addresses, plus offsets of 0x4, 0x8 and 0xC, respectively. See **Section 13.3 "CLR, SET, and INV Registers"** for more information.

© 2020 Microchip Technology Inc.

REGISTER 5-1: NVMCON: PROGRAMMING CONTROL REGISTER

Bit Range	Bit 31/23/15/7	Bit 30/22/14/6	Bit 29/21/13/5	Bit 28/20/12/4	Bit 27/19/11/3	Bit 26/18/10/2	Bit 25/17/9/1	Bit 24/16/8/0
31:24	U-0	U-0	U-0	U-0	U-0	U-0	U-0	U-0
	—	—	—	—	—	—	—	—
23:16	U-0	U-0	U-0	U-0	U-0	U-0	U-0	U-0
	—	—	—	—	—	—	—	—
15:8	R/HS/HC-0	R/W-0	R/HS/HC-0	R/HS/HC-0	U-0	U-0	U-0	R/HS/HC-0
	WR(1)	WREN(1)	WRERR(1)	LVDERR(1)	—	—	—	HTDPGM
7:0	U-0	U-0	U-0	U-0	R/W-0	R/W-0	R/W-0	R/W-0
	—	—	—	—	NVMOP[3:0]			

Legend:	HC = Hardware Set	HC = Hardware Cleared	
R = Readable bit	W = Writable bit	U = Unimplemented bit, read as '0'	
-n = Value at POR	'1' = Bit is set	'0' = Bit is cleared	x = Bit is unknown

bit 31-16 **Unimplemented:** Read as '0'

bit 15 **WR**: Write Control Bit(1)
1 = Initiate a Flash operation. Hardware clears this bit when the operation completes.
0 = Flash operation complete or inactive.

Note: This field can only be modified when WREN = 1, TEMP = 1, and the NVMKEY unlock sequence is satisfied.

bit 14 **WREN**: Write Enable Bit(1)
1 = Enables writes to WR
0 = Disables writes to WR

bit 13 **WRERR**: Write Error Bit(1)
1 = Program or erase sequence does not complete successfully
0 = Program or erase sequence completed normally

Note: Cleared by setting NVMOP == 0000b and initiating a Flash operation (WR).

bit 12 **LVDERR**: Low-voltage Detect Error Bit(1)
The error is only captured for programming/erase operations (when WR = 1).
1 = Low-voltage is detected (possible data corruption if WRERR is set)
0 = Normal voltage is detected

Note: Cleared by setting NVMOP == 0000b and initiating a Flash operation (WR).

bit 11-9 **Unimplemented:** Read as '0'

bit 8 **HTDPGM**: High Temperature Detected during Program/Erase Operation bit
This status is only captured for programming/erase operations (when WR = 1).
1 = High temperature is detected (possible data corruption, verify operation)
0 = High temperature is not detected

Note: Cleared by setting NVMOP == 0000b and initiating a Flash operation (WR)

bit 7-4 **Unimplemented:** Read as '0'

Note 1: These bits are only reset by a POR and are not affected by other Reset sources.

2: This operation results in a No Operation (NOP) when the Dynamic Flash ECC Configuration bits = 00 (FECCCON[1:0] (CFGCON0[299:28])), which enables ECC at all times. For all other FECCCON[1:0] bit settings, this command will execute, but will not write the ECC bits for the Word and can cause DED errors if dynamic Flash ECC is enabled (FECCCON[1:0] = 01).

REGISTER 5-1: NVMCON: PROGRAMMING CONTROL REGISTER (CONTINUED)

bit 3-0 **NVMOP[3:0]:** NVM Operation bits
These bits are only writable when WREN = 0.
1111 = Reserved
•
•
•
1000 = Reserved
0111 = Program erase operation: erase all of program Flash memory (all pages must be unprotected)
0110 = Upper program Flash memory erase operation: erases only the upper mapped region of program Flash (all pages in that region must be unprotected)
0101 = Lower program Flash memory erase operation: erases only the lower mapped region of program Flash (all pages in that region must be unprotected)
0100 = Page erase operation: erases page selected by NVMADDR, if it is not write-protected
0011 = Row program operation: programs row selected by NVMADDR, if it is not write-protected
0010 = Quad Word (256-bit) program operation: programs the 256-bit Flash Word selected by NVMADDR, if it is not write-protected 0001 = Word program operation: programs Word selected by NVMADDR, if it is not write-protected(2) 0000 = No operation

Note 1: These bits are only reset by a POR and are not affected by other Reset sources.

2: This operation results in a No Operation (NOP) when the Dynamic Flash ECC Configuration bits = 00 (FECCCON[1:0] (CFGCON0[299:28])), which enables ECC at all times. For all other FECCCON[1:0] bit settings, this command will execute, but will not write the ECC bits for the Word and can cause DED errors if dynamic Flash ECC is enabled (FECCCON[1:0] = 01).

 © 2020 Microchip Technology Inc.

REGISTER 5-2: NVMCON2: PROGRAMMING CONTROL2 REGISTER

Bit Range	Bit 31/23/15/7	Bit 30/22/14/6	Bit 29/21/13/5	Bit 28/20/12/4	Bit 27/19/11/3	Bit 26/18/10/2	Bit 25/17/9/1	Bit 24/16/8/0
31:24	R/W-0	R/W-0	R/W-0	R/W-0	U-0	U-0	U-0	R/W-1
	ERS[3:0]				—	—	—	SLEEP
23:16	U-0	U-0	U-0	R/W-1	R/W-1	R/W-1	R/W-1	R/W-1
	—	—	—	WS[4:0]				
15:8	U-0	R/W-cfg	R/W-0	R/W-0	U-0	U-0	R/W-0	R/W-0
	—	TEMP	CREAD1	VREAD1	—	—	RETRY[1:0]	
7:0	U-0	U-0	U-0	U-0	U-0	U-0	U-0	U-0
	—	—	—	—	—	—	—	—

Legend:	HC = Hardware Set	HC = Hardware Cleared	
R = Readable bit	W = Writable bit	U = Unimplemented bit, read as '0'	
-n = Value at POR	'1' = Bit is set	'0' = Bit is cleared	x = Bit is unknown

bit 31-28 **ERS[3:0]**: Erase Retry State

These bits are used by software to track the software state of the erase retry procedure in the event of a system Reset (MCLR) or brown out Reset event.

bit 27-25 **Unimplemented:** Read as '0'

bit 24 **SLEEP**: Power Down in Sleep bit
1 = Configures Flash for power down when the system is in Sleep mode
0 = Configures Flash for standby when the system is in Sleep mode

Note: This field can only be modified when the NVMKEY unlock sequence is satisfied.

bit 23-21 **Unimplemented:** Read as '0'

bit 20-16 **WS[4:0]**: Flash Access Wait State Control for VREAD1 = 1
11111 = 31 wait states (32 total system clocks)
11110 = 30 wait states (31 total system clocks)
. . .
00010 = 2 wait states (3 total system clocks)
00001 = 1 wait state (2 total system clocks)
00000 = 0 wait state (1 total system clock)

Note 1: When VREAD1 = 1, WS[] only affects the panel containing NVMADDR[].
2: This field can only be modified when the NVMKEY unlock sequence is satisfied.

bit 15 **Unimplemented:** Read as '0'

bit 14 **TEMP**: Operating Temperature Control bit
1 = Configures Flash for standard temperature, low latency reads
0 = Configures Flash for high temperature, high latency reads

Note 1: When TEMP = 0, all NVMOP Operations are disabled because NVMWR cannot be written to '1'.
2: When TEMP = 0, firmware must adjust Flash wait state control at the system level.
3: This field can only be modified when NVMCON.WR == 0 and the NVMKEY unlock sequence is satisfied.

bit 13 **CREAD1**: Compare Read of Logic 1 bit

Compare read 1 causes all bits in a Flash Word (including ECC if it exists) to be evaluated during the read. If all bits are 1, the lowest Word in the Flash Word evaluates to 0x0000_0001, all other Words are 0x0001_0000. If any bit is 0, the read evaluates to 0x0000_0000 for all Words in the Flash Word.

1 = Compare read enabled, only if VREAD1 = 1
0 = Compare read disabled

Note 1: When using erase retry in an ECC Flash system, CREAD1 = 1 must be used.
2: This field can only be modified when the NVMKEY unlock sequence is satisfied.

REGISTER 5-2: NVMCON2: PROGRAMMING CONTROL2 REGISTER (CONTINUED)

bit 12 **VREAD1**: Verify Read of Logic 1 Control bit
1 = Selects erase retry procedure with verify read
0 = Selects single erase without verify read

Note 1: When VREAD1 = 1, Flash wait state control is from WS[] for the panel containing NVMADDR[].

2: Using erase retry and verify read procedure increase life of Flash panel(s).

3: This field can only be modified when NVMCON.WR == 0 and the NVMKEY unlock sequence is satisfied.

bit 11 **Unimplemented:** Read as '0'

bit 10 **Unimplemented:** Read as '0'

bit 9-8 **RETRY[1:0]**: Erase Retry Control bit, only used when VREAD1 = 1
11 = Erase strength for last retry cycle
10 = Erase strength for third retry cycle
01 = Erase strength for second retry cycle
00 = Erase strength for first retry cycle

Note: This field can only be modified when NVMCON.WR == 0.

bit 7-0 **Unimplemented:** Read as '0'

 © 2020 Microchip Technology Inc.

REGISTER 5-3: NVMKEY: PROGRAMMING UNLOCK REGISTER

Bit Range	Bit 31/23/15/7	Bit 30/22/14/6	Bit 29/21/13/5	Bit 28/20/12/4	Bit 27/19/11/3	Bit 26/18/10/2	Bit 25/17/9/1	Bit 24/16/8/0
31:24	W-0	W-0	W-0	W-0	W-0	W-0	W-0	W-0
	NVMKEY[31:24]							
23:16	W-0	W-0	W-0	W-0	W-0	W-0	W-0	W-0
	NVMKEY[23:16]							
15:8	W-0	W-0	W-0	W-0	W-0	W-0	W-0	W-0
	NVMKEY[15:8]							
7:0	W-0	W-0	W-0	W-0	W-0	W-0	W-0	W-0
	NVMKEY[7:0]							

Legend:			
R = Readable bit	W = Writable bit	U = Unimplemented bit, read as '0'	
-n = Value at POR	'1' = Bit is set	'0' = Bit is cleared	x = Bit is unknown

bit 31-0 **NVMKEY[31:0]:** Unlock Register bits

These bits are write only and read '0' on any read.

Note: This register is used as part of the unlock sequence to prevent inadvertent writes to the program Flash.

REGISTER 5-4: NVMADDR: FLASH ADDRESS REGISTER

Bit Range	Bit 31/23/15/7	Bit 30/22/14/6	Bit 29/21/13/5	Bit 28/20/12/4	Bit 27/19/11/3	Bit 26/18/10/2	Bit 25/17/9/1	Bit 24/16/8/0
31:24	R/W-0	R/W-0	R/W-0	R/W-0	R/W-0	R/W-0	R/W-0	R/W-0
	NVMADDR[31:24]							
23:16	R/W-0	R/W-0	R/W-0	R/W-0	R/W-0	R/W-0	R/W-0	R/W-0
	NVMADDR[23:16]							
15:8	R/W-0	R/W-0	R/W-0	R/W-0	R/W-0	R/W-0	R/W-0	R/W-0
	NVMADDR[15:8]							
7:0	R/W-0	R/W-0	R/W-0	R/W-0	R/W-0	R/W-0	R/W-0	R/W-0
	NVMADDR[7:0]							

Legend:			
R = Readable bit	W = Writable bit	U = Unimplemented bit, read as '0'	
-n = Value at POR	'1' = Bit is set	'0' = Bit is cleared	x = Bit is unknown

bit 31-0 **NVMADDR[31:0]:** Flash (Word) Address bits

NVMOP[3:0] Selection	Flash Address Bits (NVMADDR[31:0])
Page erase	Address identifies the page to erase.
Row program	Address identifies the row to program.
Double Word program	Address identifies the 64-bit DWord to program. NVMADDR[2:0] bits are ignored.
Quad Double Word program	Address identifies the 256-bit Quad DWord to program. NVMADDR[4:0] bits are ignored.

Note 1: Hardware prevents writing to this register when NVMCON.WR = 1.

2: For all other NVMOP[3:0] bit settings, the Flash address is ignored. See the NVMCON register (Register 5-1) for additional information on these bits.

3: The bits in this register are only reset by a POR and are not affected by other Reset sources.

 © 2020 Microchip Technology Inc.

REGISTER 5-5: NVMDATAx: FLASH PROGRAM DATA REGISTER (x = 0-7)

Bit Range	Bit 31/23/15/7	Bit 30/22/14/6	Bit 29/21/13/5	Bit 28/20/12/4	Bit 27/19/11/3	Bit 26/18/10/2	Bit 25/17/9/1	Bit 24/16/8/0
31:24	R/W-0	R/W-0	R/W-0	R/W-0	R/W-0	R/W-0	R/W-0	R/W-0
	NVMDATA[31:24]							
23:16	R/W-0	R/W-0	R/W-0	R/W-0	R/W-0	R/W-0	R/W-0	R/W-0
	NVMDATA[23:16]							
15:8	R/W-0	R/W-0	R/W-0	R/W-0	R/W-0	R/W-0	R/W-0	R/W-0
	NVMDATA[15:8]							
7:0	R/W-0	R/W-0	R/W-0	R/W-0	R/W-0	R/W-0	R/W-0	R/W-0
	NVMDATA[7:0]							

Legend:			
R = Readable bit	W = Writable bit	U = Unimplemented bit, read as '0'	
-n = Value at POR	'1' = Bit is set	'0' = Bit is cleared	x = Bit is unknown

bit 31-0 **NVMDATAx[31:0]:** Flash Programming Data bits
The value in this register is written to Flash when a program operation is commanded.

Single Double Word program (64-bit)
Writes NVMDATA1:NVMDATA0 to the target Flash address defined in NVMADDR.

Quad Double Word program (256-bit)
Writes NVMDATA7:NVMDATA6:NVMDATA5:NVMDATA4:NVMDATA3:NVMDATA2:NVMDATA1:NVMDATA0 to the target Flash address defined in NVMADDR. NVMDATA0 contains the Least Significant Instruction Word.

Note: Hardware prevents writing to this register when NVMCON.WR = 1.

REGISTER 5-6: NVMSRCADDR: SOURCE DATA ADDRESS REGISTER

Bit Range	Bit 31/23/15/7	Bit 30/22/14/6	Bit 29/21/13/5	Bit 28/20/12/4	Bit 27/19/11/3	Bit 26/18/10/2	Bit 25/17/9/1	Bit 24/16/8/0
31:24	R/W-0	R/W-0	R/W-0	R/W-0	R/W-0	R/W-0	R/W-0	R/W-0
	NVMSRCADDR[31:24]							
23:16	R/W-0	R/W-0	R/W-0	R/W-0	R/W-0	R/W-0	R/W-0	R/W-0
	NVMSRCADDR[23:16]							
15:8	R/W-0	R/W-0	R/W-0	R/W-0	R/W-0	R/W-0	R/W-0	R/W-0
	NVMSRCADDR[15:8]							
7:0	R/W-0	R/W-0	R/W-0	R/W-0	R/W-0	R/W-0	R/W-0	R/W-0
	NVMSRCADDR[7:0]							

Legend:			
R = Readable bit	W = Writable bit	U = Unimplemented bit, read as '0'	
-n = Value at POR	'1' = Bit is set	'0' = Bit is cleared	x = Bit is unknown

bit 31-0 **NVMSRCADDR[31:0]:** Source Data (Word) Address bits

This is the system physical Word address of the data (in DRM) to be programmed into the Flash when NVMCON.NVMOP is set to row programming.

Note: Hardware prevents writing to this register when NVMCON.WR = 1.

 © 2020 Microchip Technology Inc.

REGISTER 5-7: NVMPWPLT: FLASH PROGRAM WRITE PROTECT LOWER REGISTER

Bit Range	Bit 31/23/15/7	Bit 30/22/14/6	Bit 29/21/13/5	Bit 28/20/12/4	Bit 27/19/11/3	Bit 26/18/10/2	Bit 25/17/9/1	Bit 24/16/8/0
31:24	R/C-1	U-0	U-0	U-0	U-0	U-0	U-0	U-0
	ULOCK	—	—	—	—	—	—	—
23:16	R/W-0	R/W-0	R/W-0	R/W-0	R/W-0	R/W-0	R/W-0	R/W-0
	PWPLT[23:16]							
15:8	R/W-0	R/W-0	R/W-0	R/W-0	R/W-0	R/W-0	R/W-0	R/W-0
	PWPLT[15:8]							
7:0	R/W-0	R/W-0	R/W-0	R/W-0	R/W-0	R/W-0	R/W-0	R/W-0
	PWPLT[7:0]							

Legend:			
R = Readable bit	W = Writable bit	U = Unimplemented bit, read as '0'	
-n = Value at POR	'1' = Bit is set	'0' = Bit is cleared	x = Bit is unknown

bit 31 **ULOCK**: NVMPWPLT Register Unlock bit
1 = NVMPWPLT register is not locked and can be modified
0 = NVMPWPLT register is locked and cannot be modified

Note 1: This field can only be modified when the NVMKEY unlock sequence is satisfied.

2: This field can be cleared at the same time as writing to PWPLT[23:0].

bit 30-24 **Unimplemented:** Read as '0'

bit 23-0 **PWPLT[23:0]**: Flash Program Write Protect Less Than Address
Pages at Flash addresses less than this value are write protected.

Note 1: This field can only be modified when the NVMKEY unlock sequence is satisfied, and ULOCK = 1.

2: This is a byte address force to align to page boundaries.

REGISTER 5-8: NVMPWPGTE: FLASH PROGRAM WRITE PROTECT GREATER REGISTER

Bit Range	Bit 31/23/15/7	Bit 30/22/14/6	Bit 29/21/13/5	Bit 28/20/12/4	Bit 27/19/11/3	Bit 26/18/10/2	Bit 25/17/9/1	Bit 24/16/8/0
31:24	R/C-1	U-0	U-0	U-0	U-0	U-0	U-0	U-0
	ULOCK	—	—	—	—	—	—	—
23:16	R/W-1	R/W-1	R/W-1	R/W-1	R/W-1	R/W-1	R/W-1	R/W-1
	PWPGTE[23:16]							
15:8	R/W-1	R/W-1	R/W-1	R/W-1	R/W-1	R/W-1	R/W-1	R/W-1
	PWPGTE[15:8]							
7:0	R/W-1	R/W-1	R/W-1	R/W-1	R/W-1	R/W-1	R/W-1	R/W-1
	PWPGTE[7:0]							

Legend:		r = Reserved	
R = Readable bit	W = Writable bit	U = Unimplemented bit, read as '0'	
-n = Value at POR	'1' = Bit is set	'0' = Bit is cleared	x = Bit is unknown

bit 31 **ULOCK**: NVMPWPGTE Register Unlock bit
1 = NVMPWPGTE register is not locked and can be modified
0 = NVMPWPGTE register is locked and cannot be modified

Note 1: This field can only be modified when the NVMKEY unlock sequence is satisfied.

2: This field can be cleared at the same time as writing to PWPGTE[23:0].

bit 30-24 **Unimplemented:** Read as '0'

bit 23-0 **PWPGTE[23:0]**: Flash Program Write Protect Address bits
Pages at Flash addresses greater than or equal to this value are write protected.

Note 1: This field can only be modified when the NVMKEY unlock sequence is satisfied, and ULOCK = 1.

2: This is a byte address force to align to page boundaries.

 © 2020 Microchip Technology Inc.

REGISTER 5-9: NVMLBWP: FLASH LOWER BOOT WRITE PROTECT REGISTER

Bit Range	Bit 31/23/15/7	Bit 30/22/14/6	Bit 29/21/13/5	Bit 28/20/12/4	Bit 27/19/11/3	Bit 26/18/10/2	Bit 25/17/9/1	Bit 24/16/8/0
31:24	R/C-1	U-0	U-0	U-0	U-0	U-0	U-0	U-0
	ULOCK	—	—	—	—	—	—	—
23:16	R/W-1	R/W-1	R/W-1	R/W-1	R/W-1	R/W-1	R/W-1	R/W-1
	LBWP23	LBWP22	LBWP21	LBWP20	LBWP19	LBWP18	LBWP17	LBWP16
15:8	R/W-1	R/W-1	R/W-1	R/W-1	R/W-1	R/W-1	R/W-1	R/W-1
	LBWP15	LBWP14	LBWP13	LBWP12	LBWP11	LBWP10	LBWP9	LBWP8
7:0	R/W-1	R/W-1	R/W-1	R/W-1	R/W-1	R/W-1	R/W-1	R/W-1
	LBWP7	LBWP6	LBWP5	LBWP4	LBWP3	LBWP2	LBWP1	LBWP0

Legend:		r = Reserved	
R = Readable bit	W = Writable bit	U = Unimplemented bit, read as '0'	
-n = Value at POR	'1' = Bit is set	'0' = Bit is cleared	x = Bit is unknown

bit 31 **ULOCK**: Lower Boot Write Protect (LBWPn) Unlock bit
1 = LBWPn bits are not locked and can be modified
0 = LBWPn bits are locked and cannot be modified

Note 1: This field can only be modified when the NVMKEY unlock sequence is satisfied.

2: This field can be cleared at the same time as writing to LBWP[msb:lsb].

bit 30-24 **Unimplemented:** Read as '0'

bit 23-0 **LBWP[23:0]**: Lower Boot Pages Write Protect bits
LBWP[n] = 1: Erase and write protection for upper boot page n is enabled
LBWP[n] = 0: Erase and write protection for upper boot page n is disabled

Note: This field can only be modified when the NVMKEY unlock sequence is satisfied, and ULOCK = 1.

REGISTER 5-10: NVMUBWP: FLASH UPPER BOOT WRITE PROTECT REGISTER

Bit Range	Bit 31/23/15/7	Bit 30/22/14/6	Bit 29/21/13/5	Bit 28/20/12/4	Bit 27/19/11/3	Bit 26/18/10/2	Bit 25/17/9/1	Bit 24/16/8/0
31:24	R/C-1	U-0	U-0	U-0	U-0	U-0	U-0	U-0
	ULOCK	—	—	—	—	—	—	—
23:16	R/W-1	R/W-1	R/W-1	R/W-1	R/W-1	R/W-1	R/W-1	R/W-1
	UBWP23	UBWP22	UBWP21	UBWP20	UBWP19	UBWP18	UBWP17	UBWP16
15:8	R/W-1	R/W-1	R/W-1	R/W-1	R/W-1	R/W-1	R/W-1	R/W-1
	UBWP15	UBWP14	UBWP13	UBWP12	UBWP11	UBWP10	UBWP9	UBWP8
7:0	R/W-1	R/W-1	R/W-1	R/W-1	R/W-1	R/W-1	R/W-1	R/W-1
	UBWP7	UBWP6	UBWP5	UBWP4	UBWP3	UBWP2	UBWP1	UBWP0

Legend:		r = Reserved	
R = Readable bit	W = Writable bit	U = Unimplemented bit, read as '0'	
-n = Value at POR	'1' = Bit is set	'0' = Bit is cleared	x = Bit is unknown

bit 31 **ULOCK**: Upper Boot Write Protect (UBWPn) Register Unlock bit
1 = UBWPn bits are not locked and can be modified
0 = UBWPn bits are locked and cannot be modified

Note 1: This field can only be modified when the NVMKEY unlock sequence is satisfied.

2: This field can be cleared at the same time as writing to UBWP[msb:lsb].

bit 30-24 **Unimplemented:** Read as '0'

bit 23-0 **UBWP[23:0]**: Upper Boot Pages Write Protect bits
UBWP[n] = 1: Erase and write protection for upper boot page n is enabled
UBWP[n] = 0: Erase and write protection for upper boot page n is disabled

Note: This field can only be modified when the NVMKEY unlock sequence is satisfied, and ULOCK = 1.

 © 2020 Microchip Technology Inc.

6.0 MEMORY ORGANIZATION

Note: This data sheet summarizes the features of the PIC32MZ W1 family of devices. It is not intended to be a comprehensive reference source. For detailed information, refer to **Section 6. "Memory Organization and Permissions"** (DS60001641) in the *"PIC32MZ W1 Family Reference Manual"*, which is available from the Microchip web site (www.microchip.com/PIC32).

PIC32MZ W1 MCUs provide 4 GB of unified virtual memory address space. All memory regions, including program, data memory, SFRs and Configuration registers, reside in this address space at their respective unique addresses. The program and data memories can be optionally partitioned into user and kernel memories. In addition, PIC32MZ W1 device allows execution from data memory.

Key features include:

- 32-bit native data width
- Separate User (KUSEG) and Kernel (KSEG0/KSEG1) mode address space
- Separate boot Flash memory for protected code
- Robust bus exception handling to intercept runaway code
- Cacheable (KSEG0) and non-cacheable (KSEG1) address regions
- Read/Write permission access to predefined memory regions

6.1 Memory Layout

PIC32MZ W1 MCUs implement two address schemes: virtual and physical. All hardware resources, such as program memory, data memory and peripherals, are located at their respective physical addresses. Virtual addresses are exclusively used by the CPU to fetch and execute instructions as well as access peripherals. Physical addresses are used by bus master peripherals, such as DMA and the Flash controller, that access memory independently of the CPU.

The main memory maps for the PIC32MZ W1 device is illustrated in Figure 6-1, which provides memory map information for boot Flash and boot alias.
Table 6-1 provides memory map information for Special Function Registers (SFRs).

FIGURE 6-1: MEMORY MAP FOR DEVICES WITH 1024 KBYTE OF PROGRAM MEMORY, 256 KBYTE RAM, AND 64 KBYTE DATA BUFFER (DBF)(1,2)

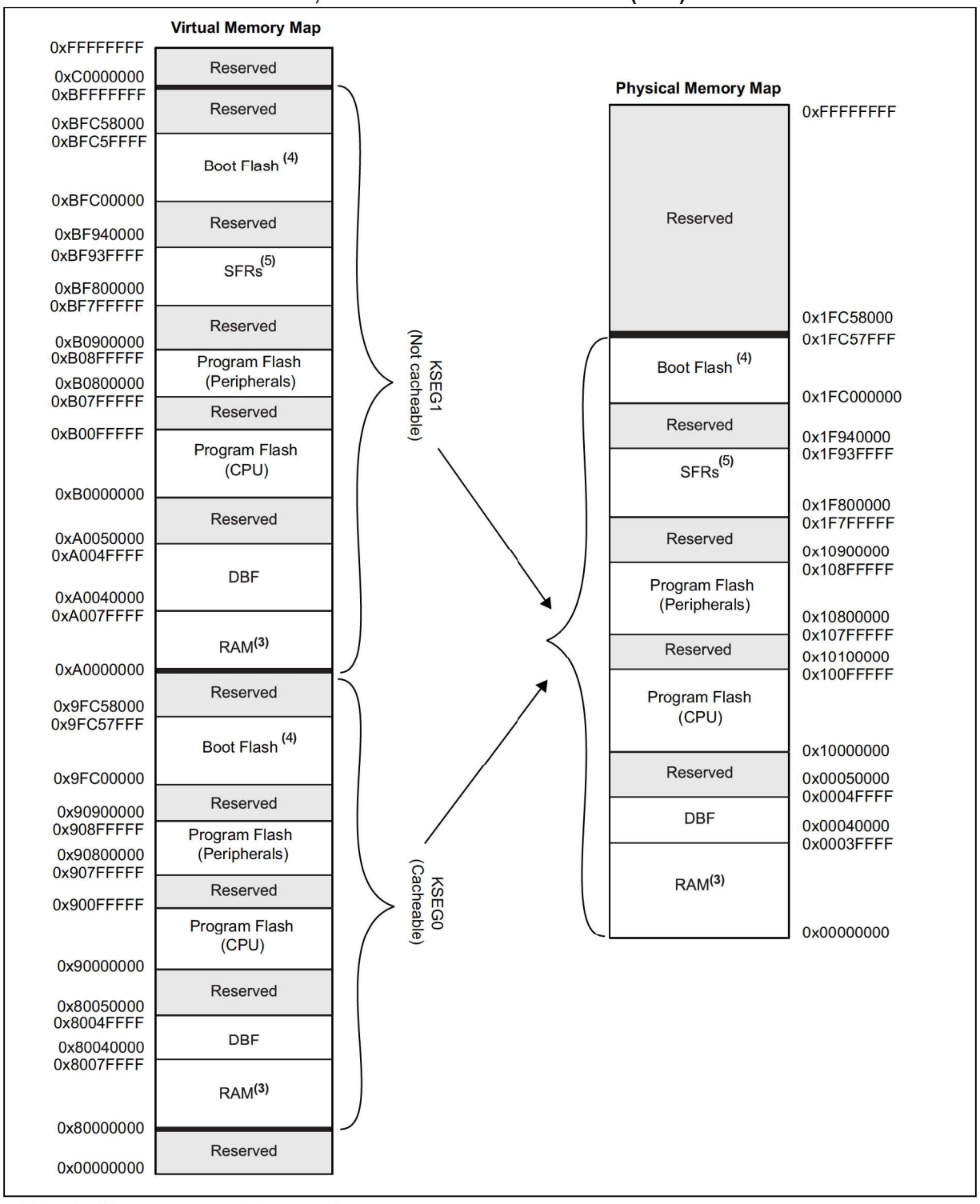

Note 1: Memory areas are not shown to scale.

2: The Cache and MMU (FMT) are initialized by compiler start-up code.

3: RAM memory is divided into two equal banks: RAM Bank 1 and RAM Bank 2 on a half boundary.

4: Refer to Figure 6-2.

5: Refer to Table 6-1.

 © 2020 Microchip Technology Inc.

FIGURE 6-2: BOOT AND ALIAS MEMORY MAP

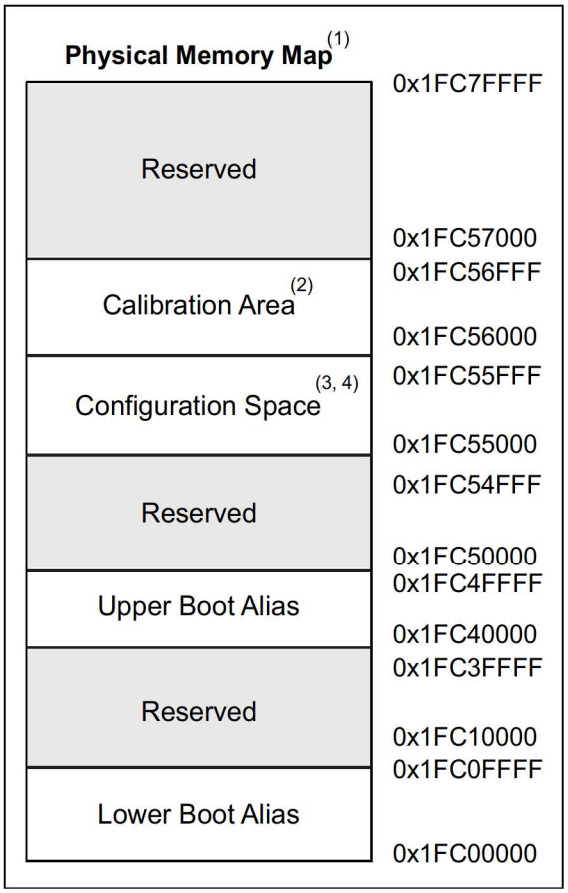

Note 1: Memory areas are not shown to scale.

2: This calibration area space cannot be modified by user.

3: Refer to **Section 6.1.1 "Boot Flash And Configuration"** for more information.

4: This configuration space cannot be used for executing code in the upper boot alias. These memory locations are used to initialize Configuration registers (see **Section 37.2 "Special Features Registers"**.

TABLE 6-1: SFR MEMORY MAP

Peripheral	Virtual Address	
	Base	Offset Start
Barco	0xBF900000	0x0000
Sonics Register Target		0x030000
Wi-Fi(2)	0xBF8C0000	0x0000
SQI		0x021000
Crypto		0x024000
RNG		0x025000
RTCC	0xBF870000	0x0000
DSCON		0x1000
I2C2	0xBF840000	0x0400
UART1-UART2		0x0600
SPI1-SPI2		0x0C00
IC1-IC4		0x1000
OC1-OC4		0x2000
Ethernet		0x3000
USB		0x4000
PORTA-PORTC	0xBF820000	0x0000
PORTK		0x0300
I2C1		0x0400
ADC		0x1000
CAN		0x2000
CAN-FD		0x3000
CVD		0x4000
Interrupt controller	0xBF810000	0x0000
DMA		0x1000
Prefetch		0x2400
PMU		0x3E00
PMU WCM		0x4000

Note 1: Refer to **Section 6.3 "System Bus Arbitration"** for important legal information.

2: This configuration space cannot be modified by the user.

TABLE 6-1: SFR MEMORY MAP (CONTINUED)

Configuration	0xBF800000	0x0000
Flash Controller		0x0600
Watchdog Timer		0x0800
Deadman Timer		0x0A00
CRU		0x1200
UART3		0x1600
PPS		0x1800
PTG		0x1C00
Timer1-Timer7		0x2000
PFW		0xFE00

Note 1: Refer to **Section 6.3 "System Bus Arbitration"** for important legal information.

2: This configuration space cannot be modified by the user.

6.1.1 BOOT FLASH AND CONFIGURATION

PIC32MZ W1 on device Reset, reads Boot Flash Configuration Word information before allowing system to boot.

Every time device Reset or NMI event occurs, the CFGPG.CPUPG[1:0] bits are reset to '0'. This helps the user to strictly control some regions. Boot code to use the CFGPG registers to define regions that are only accessible by group 0. Once the boot code is finished with data or code operations, it must set the CFGPG.CPUPG[1:0] to a value other than '0'.

 © 2020 Microchip Technology Inc.

6.2 Boot Flash Configuration Registers

TABLE 6-2: BOOT FLASH CONFIGURATION WORD SUMMARY

Virtual Address (BFC5_5F9F)	Register Name	Bit Range	Bits																All Resets
			31/15	30/14	29/13	28/12	27/11	26/10	25/9	24/8	23/7	22/6	21/5	20/4	19/3	18/2	17/1	16/0	
0000	BFDEVCFG0	31:16	BINFOVAL-ID0	—	SIGN	CP	—	—	—	—	—	—	—	—	—	—	—	—	xxxx
		15:00	—	—	—	—	—	—	—	—	—	—	—	—	BOOT-ISA	—	PCSC-MODE	BUHSW	xxxx
0004	BFDEVCFG1	31:16	EPGMCLK	ETHTPSF	FECCCON[1:0]		ETHPLL-HWMD	BTPLL-HWMD	SPLL-HWMD	UPLL-HWMD	PCM	—	CANFDDIV		—	—	IC_ACLK	OC_ACLK	xxxx
		15:00	CFGLOCK[1:0]		IOLOCK	PMDLOCK	PGLOCK	PMULOCK	—	USBSSEN	EXLPRI	DMAPRI	FCPRI	—	JTAGEN	TROEN	—	TDOEN	xxxx
0008	BFDEVCFG2	31:16	—	—	—	WDTPS[4:0]					USBDPTRIM[3:0]				USBDMTRIM[3:0]				xxxx
		15:00	HSUARTEN	SMCLR	HSSPIEN	VBUSIO	USBIDIO	CLASSB-DIS	ETHEX-EREF	FMIIEN	—	—	TRCEN	ICESEL[1:0]		—	DEBUG[1:0]		xxxx
000C	BFDEVCFG3	31:16	DMTEN	DMTCNT[4:0]					WDTWINSZ[1:0]		WDTEN	WINDIS	WDTSPGM	WDTPS[4:0]					xxxx
		15:00	FSCMEN	CKSWEN	WAKE2SPD	SOSCSEL	WDTRMCS[1:0]		POSCMOD[1:0]		—	—	DMTINTV[2:0]			—	—	—	xxxx
0010	BFDEVCFG4	31:16	—	SOSCEN	—	DSEN	DSWDTEN	DSWD-TOSC	DSWDTPS[4:0]					DSZP-BOREN	VBZP-BOREN	—	—	—	xxxx
		15:00	—	—	—	—	—	—	—	—	SOSCCFG[7-0]								xxxx
0014	BFDEVCFG5	31:16	—	—	—	—	—	—	—	—	—	—	—	—	—	—	—	—	xxxx
		15:00	USERID[15:0]																xxxx

Legend: x = unknown value on Reset; — = unimplemented, read as '0'. Reset values are shown in hexadecimal.

Note 1: The user configured setting of BFDEVCFG0 to BFDEVCFG5 loaded from boot Flash into following counterpart registers at system start-up.

- BFDEVCFG0 to BCFG0(L)
- BFDEVCFG1 to CFGCON0(L)
- BFDEVCFG2 to CFGCON1(L)
- BFDEVCFG3 to CFGCON2(L)
- BFDEVCFG4 to CFGCON4(L)
- BFDEVCFG5 to USERID

Definition of BCFG0, CFGCON0, CFGCON1, CFGCON2, CFGCON4 and USERID is available in Table 37-1.

© 2020 Microchip Technology Inc.

TABLE 6-1: BOOT FLASH CODE PROTECTION REGISTER SUMMARY MAP

Virtual Address (BFC5_5FBF)	Register Name(1)	Bit Range	Bits															All Resets
			31/15	30/14	29/13	28/12	27/11	26/10	25/9	24/8	23/7	22/6	21/5	20/4	19/3	18/2	17/1	16/0	
0000	BFDEVCP	31:16	—	—	—	CP	—	—	—	—	—	—	—	—	—	—	—	—	xxxx
		15.0	—	—	—	—	—	—	—	—	—	—	—	—	—	—	—	—	xxxx

REGISTER 6-2: BFDEVCP: BOOT FLASH CODE PROTECTION REGISTER

Bit Range	Bit 31/23/15/7	Bit 30/22/14/6	Bit 29/21/13/5	Bit 28/20/12/4	Bit 27/19/11/3	Bit 26/18/10/2	Bit 25/17/9/1	Bit 24/16/8/0
31:24	U-0	U-0	U-0	R-P	U-0	U-0	U-0	U-0
	—	—	—	CP	—	—	—	—
23:16	U-0	U-0	U-0	U-0	U-0	U-0	U-0	U-0
	—	—	—	—	—	—	—	—
15:8	U-0	U-0	U-0	U-0	U-0	U-0	U-0	U-0
	—	—	—	—	—	—	—	—
7:0	U-0	U-0	U-0	U-0	U-0	U-0	U-0	U-0
	—	—	—	—	—	—	—	—

Legend:			
R = Readable bit	W = Writable bit	U = Unimplemented bit, read as '0'	
-n = Value at POR	'1' = Bit is set	'0' = Bit is cleared	P = Programmable Bit

bit 31-29 **Unimplemented:** Read as '0'

bit 28 **CP:** Code Protect bit
0 = Protection Disabled
1 = Protection Enabled

bit 27-0 **Unimplemented:** Read as '0'

 © 2020 Microchip Technology Inc.

TABLE 6-3: BOOT FLASH SIGN REGISTER SUMMARY MAP

Virtual Address (BFC5_5FDF)	Register Name(1)	Bit Range	Bits															All Resets
			31/15	30/14	29/13	28/12	27/11	26/10	25/9	24/8	23/7	22/6	21/5	20/4	19/3	18/2	17/1	16/0	
0000	BFDEV-SIGN	31:16	SIGN	—	—	—	—	—	—	—	—	—	—	—	—	—	—	—	xxxx
		15:0	—	—	—	—	—	—	—	—	—	—	—	—	—	—	—	—	xxxx

REGISTER 6-4: BFDEVSIGN: BOOT FLASH SIGN REGISTER

Bit Range	Bit 31/23/15/7	Bit 30/22/14/6	Bit 29/21/13/5	Bit 28/20/12/4	Bit 27/19/11/3	Bit 26/18/10/2	Bit 25/17/9/1	Bit 24/16/8/0
31:24	R-P	U-0	U-0	U-0	U-0	U-0	U-0	U-0
	SIGN	—	—	—	—	—	—	—
23:16	U-0	U-0	U-0	U-0	U-0	U-0	U-0	U-0
	—	—	—	—	—	—	—	—
15:8	U-0	U-0	U-0	U-0	U-0	U-0	U-0	U-0
	—	—	—	—	—	—	—	—
7:0	U-0	U-0	U-0	U-0	U-0	U-0	U-0	U-0
	—	—	—	—	—	—	—	—

Legend:			
R = Readable bit	W = Writable bit	U = Unimplemented bit, read as '0'	
-n = Value at POR	'1' = Bit is set	'0' = Bit is cleared	P = Programmable Bit

bit 31 **SIGN:** Flash SIGN bit
1 = Unsigned
0 = Signed

bit 30-0 **Unimplemented:** Read as '0'

6.3 System Bus Arbitration

Note:	The System Bus interconnect implements one or more instantiations of the SonicsSX® interconnect from Sonics, Inc. This document contains materials that are (c) 2003-2015 Sonics, Inc., and that constitute proprietary information of Sonics, Inc. SonicsSX is a registered trademark of Sonics, Inc. All such materials and trademarks are used under license from Sonics, Inc.

As shown in the PIC32MZ W1 family block diagram (see Figure 2-1), there are multiple initiator modules (I1 through I13) in the system that can access various target modules (T1 through T13). Table 6-3 lists the initiator and its corresponding access target. The System Bus supports simultaneous access to targets by initiators, so long as the initiators are accessing different targets. The System Bus will perform arbitration if multiple initiators attempt to access the same target.

 © 2020 Microchip Technology Inc.

TABLE 6-3: INITIATORS TO TARGET ACCESS ASSOCIATION

Target #	Initiator ID	1	2	3	4	5	6	7	8	9	10	11	12	13	14
	Name	CPU	Flash Controller	DMA Read	DMA Write	ICD	Wi-Fi®	ADC	CAN	CAN-FD	Crypto	Ethernet TX	Ethernet RX	SQI	USB
1	RAM Bank 1 Memory	X	X	X	X	X	X	X	X	X	X	X	X	X	X
2	RAM Bank 2 Memory	X	X	X	X	X	X	X	X	X	X	X	X	X	X
3	Data Buffer Memory	X	X	X	X	X	X	X	X	X	X	X	X	X	X
4	Prefetch	X		X			X	X	X	X	X	X	X	X	X
5	Flash Memory Boot Flash	X				X									
6	Peripheral Set 1: Flash Controller, WDT, DMT, Clock Reset Unit, PTG, UART3, PPS, Timer 1-7	X	X	X	X	X									
7	Peripheral Set 2: Port A, Port B, Port C, Port K, I2C1, ADC, CAN, CAN-FD, CVD Controller	X	X	X	X	X									
8	Wi-Fi®	X	X	X	X	X									
9	Peripheral Set 4: RTCC, DSCON	X	X	X		X									
10	SSX RT	X	X	X	X	X									
11	Peripheral Set 3: I2C, UART1-UART2, SPI1-SPI2, IC1-IC4, OC1-OC4, Ethernet Controller, USB	X	X	X	X	X									
12	AHB	X	X	X	X	X									
13	SQI	X	X	X	X	X									

Legend:

- X= Connection between initiator and target
- Shaded cells = No connection between initiator and target

© 2020 Microchip Technology Inc.

The System Bus arbitration scheme implements a non-programmable, Least Recently Serviced (LRS) priority, which provides Quality Of Service (QOS) for most initiators. However, some initiators can use Fixed High Priority (HIGH) arbitration to guarantee their access to data.

The arbitration scheme for the available initiators is shown in Table 6-4.

TABLE 6-4: INITIATOR ID AND QOS

Name	ID	QOS
CPU	1	LRS(1)
CPU	2	HIGH(1,2)
Flash Controller	3	LRS(1)
Flash Controller	4	HIGH(1,2)
DMA Read	5	LRS(1)
DMA Read	6	HIGH(1,2)
DMA Write	7	LRS(1)
DMA Write	8	HIGH(1,2)
ICD - JTAG	9	LRS
Wi-Fi®	10	LRS
ADC	11	LRS
CAN	12	LRS
CAN-FD	13	LRS
Crypto Engine	14	LRS
Ethernet Write	15	LRS
Ethernet Read	16	LRS
SQI	17	LRS
USB	18	LRS

Note 1: When accessing SRAM, the DMAPRI bit (CFGCON0[6]), the FCPRI bit (CFGCON0[5]), and the EXLPRI bit (CFGCON0[7]) provide arbitration control for the DMA, FC, and CPU (when servicing an interrupt (EXL = 1)), respectively, by selecting the use of LRS or HIGH. When using HIGH, the DMA, FC, and CPU get arbitration preference over all initiators using LRS.

2: Using HIGH arbitration can have serious negative effects on other initiators. Therefore, it is recommended to not enable this type of arbitration for an initiator that uses significant system bandwidth. HIGH arbitration is intended to be used for low bandwidth applications that require low latency, such as LCC graphics applications.

6.4 Permission Access and System Bus Registers

The System Bus on PIC32MZ W1 family of MCUs provide access control capabilities for the transaction initiators on the System Bus.

The System Bus divides the entire memory space into 14 target regions and permits access to each target by initiators through permission groups. Four Permission Groups (0 through 3) can be assigned to each initiator. Each permission group is independent of the others and can have exclusive or shared access to a region.

Using the CFGPG register (see Register 37-6 in **Section 37.0 "Special Features"**), Boot firmware can assign a permission group to each initiator, which can make requests on the System Bus.

The available targets and their regions, as well as the associated control registers to assign protection, are described and listed in Table 6-5.

Register 6-5 through Register 6-12 are used for setting and controlling access permission groups and regions.

To change these registers, they must be unlocked in hardware. The register lock is controlled by the PGLOCK Configuration bit (CFGCON[11]). Setting PGLOCK prevents writes to the control registers; clearing PGLOCK allows writes.

To set or clear the PGLOCK bit, an unlock sequence must be executed. Refer to *Oscillators with Enhanced PLL* in the *"PIC32 Family Reference Manual"* for more details.

 © 2020 Microchip Technology Inc.

TABLE 6-5: SYSTEM BUS TARGETS AND ASSOCIATED PROTECTION REGISTERS

Target Number	Target Description[5]	SBTxREGy Register							SBTxRDy Register		SBTxWRy Register	
		Name	Region Base (BASE[21:0])[2]	Physical Start Address	Region Size (SIZE[4:0])[3]	Region Size	Priority (PRI)	Priority Level	Name	Read Permission (GROUP3, GROUP2, GROUP1, GROUP0)	Name	Write Permission (GROUP3, GROUP2, GROUP1, GROUP0)
1	RAM Bank 1 Memory	SBT1REG0	R	0x00000000	R[4]	128 Kbyte	—	0	SBT1RD0	R/W[1]	SBT1WR0	R/W
		SBT1REG1	R/W	R/W	R/W	R/W	—	3	SBT1RD1	R/W[1]	SBT1WR1	R/W
		SBT1REG2	R/W	R/W	R/W	R/W	0	1	SBT1RD2	R/W[1]	SBT1WR2	R/W
2	RAM Bank 2 Memory	SBT2REG0	R	0x00020000	R[4]	128 Kbyte	—	0	SBT2RD0	R/W[1]	SBT2WR0	R/W
		SBT2REG1	R/W	R/W	R/W	R/W	—	3	SBT2RD1	R/W[1]	SBT2WR1	R/W
		SBT2REG2	R/W	R/W	R/W	R/W	0	1	SBT2RD2	R/W[1]	SBT2WR2	R/W
3	Data Buffer Memory	SBT3REG0	R	0x00040000	R[4]	64 Kbyte	—	0	SBT3RD0	R/W[1]	SBT3WR0	R/W
		SBT3REG1	R/W	R/W	R/W	R/W	—	3	SBT3RD1	R/W[1]	SBT3WR1	R/W
		SBT3REG2	R/W	R/W	R/W	R/W	0	1	SBT3RD2	R/W[1]	SBT3WR2	R/W
4	Flash Memory (Peripherals)	SBT4REG0	R	0x10800000	R	1 Mbyte	—	0	SBT4RD0	R/W[1]	SBT4WR0	0, 0, 0, 0
		SBT4REG1	R/W	R/W	R/W	R/W	—	3	SBT4RD1	R/W[1]	SBT4WR1	0, 0, 0, 0
		SBT4REG2	R/W	R/W	R/W	R/W	0	1	SBT4RD2	R/W[1]	SBT4WR2	0, 0, 0, 0
5	Flash Memory (CPU)	SBT5REG0	R	0x10000000	R[4]	1 Mbyte	—	0	SBT5RD0	R/W[1]	SBT5WR0	0, 0, 0, 0
		SBT5REG2	R/W	R/W	R/W	R/W	0	1	SBT5RD2	R/W[1]	SBT5WR2	0, 0, 0, 0
		SBT5REG3	R/W	R/W	R/W	R/W	0	1	SBT5RD3	R/W[1]	SBT5WR3	0, 0, 0, 0
		SBT5REG4	R	R	R	R	1	2	SBT5RD4	0, 0, 0, 1	SBT5WR4	0, 0, 0, 0
		SBT5REG5	R	R	R	R	1	2	SBT5RD5	0, 0, 0, 1	SBT5WR5	0, 0, 0, 0
		SBT5REG6	R	R	R	R	1	2	SBT5RD6	0, 0, 0, 1	SBT5WR6	0, 0, 0, 0
		SBT5REG7	R	R	R	R	1	2	SBT5RD7	1, 1, 1,1	SBT5WR7	0, 0, 0, 0
		SBT5REG8	R	R	R	R	1	2	SBT5RD8	1, 1, 1, 1	SBT5WR8	0, 0, 0, 0
		SBT5REG9	R	R	R	R	1	2	SBT5RD9	0, 0, 0, 1	SBT5WR9	0, 0, 0, 0
		SBT5REG10	R	R	R	R	1	2	SBT5RD10	0, 0, 0, 1	SBT5WR10	0, 0, 0, 0
6	Peripheral Set 1: Flash Controller, DMT, WDT, Clock Reset Unit, UART3, PPS, PTG, Timer1-Timer7, DMA, ICD, PMU	SBT6REG0	R	0x1F800000	R	128 Kbyte	—	0	SBT6RD0	R/W[1]	SBT6WR0	R/W
		SBT6REG1	R/W	R/W	R/W	R/W	—	3	SBT6RD1	R/W[1]	SBT6WR1	R/W

Legend: R = Read; R/W = Read/Write; 'x' in a register name = 0-13; 'y' in a register name = 0-10.

Note 1: Reset values for these bits are '1', '1', '1', '1', respectively.

2: The BASE[21:0] bits must be set to the corresponding Physical Address and right shifted by 10 bits. For Read-only bits, this value is set by hardware on Reset.

3: The SIZE[4:0] bits must be set to the corresponding Region Size, based on the following formula: Region Size = $2^{(SIZE-1)}$ x 1024 bytes. For read-only bits, this value is set by hardware on Reset.

4: Refer to the Device Memory Maps (Figure 6-1 for specific device memory sizes and start addresses.

5: See Table 6-1 for information on specific target memory size and start addresses.

6: The SBTxREG1 SFRs are reserved, and therefore, are not listed in this table for this target.

© 2020 Microchip Technology Inc.

TABLE 6-5: SYSTEM BUS TARGETS AND ASSOCIATED PROTECTION REGISTERS (CONTINUED)

Target Number	Target Description[5]	SBTxREGy Register							SBTxRDy Register		SBTxWRy Register	
		Name	Region Base (BASE[21:0]) [2]	Physical Start Address	Region Size (SIZE[4:0]) [3]	Region Size	Priority (PRI)	Priority Level	Name	Read Permission (GROUP3, GROUP2, GROUP1, GROUP0)	Name	Write Permission (GROUP3, GROUP2, GROUP1, GROUP0)
7	Peripheral Set 2: Port A, Port B, Port C, Port K, I2C1, ADC, CAN, CAN-FD, CVD Controller	SBT7REG0	R	0x1F820000	R	128 Kbyte	—	0	SBT7RD0	R/W[1]	SBT7WR0	R/W
8	Wi-Fi	SBT8REG0	R	0x1F8C0000	R	128 Kbyte	—	0	SBT8RD0	R/W[1]	SBT8WR0	R/W
9	Peripheral Set 4: RTCC, DSCON	SBT9REG0	R	0x1F870000	R	128 Kbyte	—	0	SBT9RD0	R/W[1]	SBT9WR0	R/W
10	SSX RT	SBT10REG0	R	0X1F8F0000	R	64 Kbyte	—	0	SBT10RD0	0, 0, 0, 1	SBT10WR0	0, 0, 0,1
11	Peripheral Set 3: I2C, UART1-UART2, SPI1-SPI2, IC1-IC4, OC1-OC4, USB, Ethernet Controller	SBT11REG0	R	0x1F840000	R	128 Kbyte	—	0	SBT11RD0	R/W[1]	SBT11WR0	R/W
12	AHB	SBT12REG0	R	0x1F8E4000	R	256 Kbyte	—	0	SBT12RD0	R/W[1]	SBT12WR0	R/W
		SBT12REG1	R/W	R/W	R/W	R/W	—	3	SBT12RD1	R/W[1]	SBT12WR1	R/W
13	SQI	SBT13REG0	R	0x1F8E1000	R	4 Kbyte	—	0	SBT13RD0	R/W[1]	SBT13WR0	R/W

Legend: R = Read; R/W = Read/Write; 'x' in a register name = 0-13; 'y' in a register name = 0-10.

Note 1: Reset values for these bits are '1', '1', '1', '1', respectively.

2: The BASE[21:0] bits must be set to the corresponding Physical Address and right shifted by 10 bits. For Read-only bits, this value is set by hardware on Reset.

3: The SIZE[4:0] bits must be set to the corresponding Region Size, based on the following formula: Region Size = $2^{(SIZE-1)}$ x 1024 bytes. For read-only bits, this value is set by hardware on Reset.

4: Refer to the Device Memory Maps (Figure 6-1 for specific device memory sizes and start addresses.

5: See Table 6-1 for information on specific target memory size and start addresses.

6: The SBTxREG1 SFRs are reserved, and therefore, are not listed in this table for this target.

© 2020 Microchip Technology Inc.

TABLE 6-6: SYSTEM BUS TARGET x REGISTER MAP, x = 1, 2, 3, 4(2)

Virtual Address #(1)	Register Name	Bit Range	Bits																All Resets
			31/15	30/14	29/13	28/12	27/11	26/10	25/9	24/8	23/7	22/6	21/5	20/4	19/3	18/2	17/1	16/0	
0020	SBTxELOG1	31:16	MULTI	—	—	—	CODE[3:0]				—	—	—	—	—	—	—	—	0000
		15:0	INITID[7:0]								REGICN[3:0]				—	CMD[2:0]			0000
0024	SBTxELOG2	31:16	—	—	—	—	—	—	—	—	—	—	—	—	—	—	—	—	0000
		15:0	—	—	—	—	—	—	—	—	—	—	—	—	—	—	GROUP[1:0]		0000
0030	SBTxECLRS	31:16	—	—	—	—	—	—	—	—	—	—	—	—	—	—	—	—	0000
		15:0	—	—	—	—	—	—	—	—	—	—	—	—	—	—	—	CLEAR	0000
0038	SBTxECLRM	31:16	—	—	—	—	—	—	—	—	—	—	—	—	—	—	—	—	0000
		15:0	—	—	—	—	—	—	—	—	—	—	—	—	—	—	—	CLEAR	0000
0040	SBTxREG0	31:16	BASE[21:6]																xxxx
		15:0	BASE[5:0]						PRI	—	SIZE[4:0]					—	—	—	xxxx
0050	SBTxRD0	31:16	—	—	—	—	—	—	—	—	—	—	—	—	—	—	—	—	xxxx
		15:0	—	—	—	—	—	—	—	—	—	—	—	—	GROUP3	GROUP2	GROUP1	GROUP0	xxxx
0058	SBTxWR0	31:16	—	—	—	—	—	—	—	—	—	—	—	—	—	—	—	—	xxxx
		15:0	—	—	—	—	—	—	—	—	—	—	—	—	GROUP3	GROUP2	GROUP1	GROUP0	xxxx
0060	SBTxREG1	31:16	BASE[21:6]																xxxx
		15:0	BASE[5:0]						PRI	—	SIZE[4:0]					—	—	—	xxxx
0070	SBTxRD1	31:16	—	—	—	—	—	—	—	—	—	—	—	—	—	—	—	—	xxxx
		15:0	—	—	—	—	—	—	—	—	—	—	—	—	GROUP3	GROUP2	GROUP1	GROUP0	xxxx
0078	SBTxWR1	31:16	—	—	—	—	—	—	—	—	—	—	—	—	—	—	—	—	xxxx
		15:0	—	—	—	—	—	—	—	—	—	—	—	—	GROUP3	GROUP2	GROUP1	GROUP0	xxxx
0080	SBTxREG2	31:16	BASE[21:6]																xxxx
		15:0	BASE[5:0]						PRI	—	SIZE[4:0]					—	—	—	xxxx
0090	SBTxRD2	31:16	—	—	—	—	—	—	—	—	—	—	—	—	—	—	—	—	xxxx
		15:0	—	—	—	—	—	—	—	—	—	—	—	—	GROUP3	GROUP2	GROUP1	GROUP0	xxxx
0098	SBTxWR2	31:16	—	—	—	—	—	—	—	—	—	—	—	—	—	—	—	—	xxxx
		15:0	—	—	—	—	—	—	—	—	—	—	—	—	GROUP3	GROUP2	GROUP1	GROUP0	xxxx

Legend: x = unknown value on Reset; — = unimplemented, read as '0'. Reset values are shown in hexadecimal.

Note 1: Target virtual addresses are:

- Target 1 Virtual address = 0xBF93_1000
- Target 2 Virtual address = 0xBF93_2000
- Target 3 Virtual address = 0xBF93_3000
- Target 4 Virtual address = 0xBF93_4000

2: For Reset values listed as 'xxxx', refer to Table 6-5 for the actual Reset values.

© 2020 Microchip Technology Inc.

TABLE 6-7: SYSTEM BUS TARGET 5 REGISTER MAP

Virtual Address (BF93_5000)	Register Name	Bit Range	Bits															All Resets
			31/15	30/14	29/13	28/12	27/11	26/10	25/9	24/8	23/7	22/6	21/5	20/4	19/3	18/2	17/1	16/0	
0020	SBT5ELOG1	31:16	MULTI	—	—	—	CODE[3:0]				—	—	—	—	—	—	—	—	0000
		15:0	INITID[7:0]								REGICN[3:0]				—	CMD[2:0]			0000
0024	SBT5ELOG2	31:16	—	—	—	—	—	—	—	—	—	—	—	—	—	—	—	—	0000
		15:0	—	—	—	—	—	—	—	—	—	—	—	—	—	—	GROUP[1:0]		0000
0028	SBT5ECON	31:16	—	—	—	—	—	—	—	ERRP	—	—	—	—	—	—	—	—	0000
		15:0	—	—	—	—	—	—	—	—	—	—	—	—	—	—	—	—	0000
0030	SBT5ECLRS	31:16	—	—	—	—	—	—	—	—	—	—	—	—	—	—	—	—	0000
		15:0	—	—	—	—	—	—	—	—	—	—	—	—	—	—	—	CLEAR	0000
0038	SBT5ECLRM	31:16	—	—	—	—	—	—	—	—	—	—	—	—	—	—	—	—	0000
		15:0	—	—	—	—	—	—	—	—	—	—	—	—	—	—	—	CLEAR	0000
0040	SBT5REG0	31:16	BASE[21:6]																xxxx
		15:0	BASE[5:0]						PRI	—	SIZE[4:0]					—	—	—	xxxx
0050	SBT5RD0	31:16	—	—	—	—	—	—	—	—	—	—	—	—	—	—	—	—	xxxx
		15:0	—	—	—	—	—	—	—	—	—	—	—	—	GROUP3	GROUP2	GROUP1	GROUP0	xxxx
0058	SBT5WR0	31:16	—	—	—	—	—	—	—	—	—	—	—	—	—	—	—	—	xxxx
		15:0	—	—	—	—	—	—	—	—	—	—	—	—	GROUP3	GROUP2	GROUP1	GROUP0	xxxx
0060	SBT5REG1	31:16	BASE[21:6]																xxxx
		15:0	BASE[5:0]						PRI	—	SIZE[4:0]					—	—	—	xxxx
0070	SBT5RD1	31:16	—	—	—	—	—	—	—	—	—	—	—	—	—	—	—	—	xxxx
		15:0	—	—	—	—	—	—	—	—	—	—	—	—	GROUP3	GROUP2	GROUP1	GROUP0	xxxx
0078	SBT5WR1	31:16	—	—	—	—	—	—	—	—	—	—	—	—	—	—	—	—	xxxx
		15:0	—	—	—	—	—	—	—	—	—	—	—	—	GROUP3	GROUP2	GROUP1	GROUP0	xxxx
0080	SBT5REG2	31:16	BASE[21:6]																xxxx
		15:0	BASE[5:0]						PRI	—	SIZE[4:0]					—	—	—	xxxx
0090	SBT5RD2	31:16	—	—	—	—	—	—	—	—	—	—	—	—	—	—	—	—	xxxx
		15:0	—	—	—	—	—	—	—	—	—	—	—	—	GROUP3	GROUP2	GROUP1	GROUP0	xxxx
0098	SBT5WR2	31:16	—	—	—	—	—	—	—	—	—	—	—	—	—	—	—	—	xxxx
		15:0	—	—	—	—	—	—	—	—	—	—	—	—	GROUP3	GROUP2	GROUP1	GROUP0	xxxx
00A0	SBT5REG3	31:16	BASE[21:6]																xxxx
		15:0	BASE[5:0]						PRI	—	SIZE[4:0]					—	—	—	xxxx

Legend: x = unknown value on Reset; — = unimplemented, read as '0'. Reset values are shown in hexadecimal.
Note: For Reset values listed as 'xxxx', refer to Table 6-5 for the actual Reset values.

© 2020 Microchip Technology Inc.

TABLE 6-7: SYSTEM BUS TARGET 5 REGISTER MAP (CONTINUED)

Virtual Address (BF93_5000)	Register Name	Bit Range	Bits															All Resets
			31/15	30/14	29/13	28/12	27/11	26/10	25/9	24/8	23/7	22/6	21/5	20/4	19/3	18/2	17/1	16/0	
00B0	SBT5RD3	31:16	—	—	—	—	—	—	—	—	—	—	—	—	—	—	—	—	xxxx
		15:0	—	—	—	—	—	—	—	—	—	—	—	—	GROUP3	GROUP2	GROUP1	GROUP0	xxxx
00B8	SBT5WR3	31:16	—	—	—	—	—	—	—	—	—	—	—	—	—	—	—	—	xxxx
		15:0	—	—	—	—	—	—	—	—	—	—	—	—	GROUP3	GROUP2	GROUP1	GROUP0	xxxx
00C0	SBT5REG4	31:16	BASE[21:6]																xxxx
		15:0	BASE[5:0]						PRI	—	SIZE[4:0]					—	—	—	xxxx
00D0	SBT5RD4	31:16	—	—	—	—	—	—	—	—	—	—	—	—	—	—	—	—	xxxx
		15:0	—	—	—	—	—	—	—	—	—	—	—	—	GROUP3	GROUP2	GROUP1	GROUP0	xxxx
00D8	SBT5WR4	31:16	—	—	—	—	—	—	—	—	—	—	—	—	—	—	—	—	xxxx
		15:0	—	—	—	—	—	—	—	—	—	—	—	—	GROUP3	GROUP2	GROUP1	GROUP0	xxxx
00E0	SBT5REG5	31:16	BASE[21:6]																xxxx
		15:0	BASE[5:0]						PRI	—	SIZE[4:0]					—	—	—	xxxx
00F0	SBT5RD5	31:16	—	—	—	—	—	—	—	—	—	—	—	—	—	—	—	—	xxxx
		15:0	—	—	—	—	—	—	—	—	—	—	—	—	GROUP3	GROUP2	GROUP1	GROUP0	xxxx
00F8	SBT5WR5	31:16	—	—	—	—	—	—	—	—	—	—	—	—	—	—	—	—	xxxx
		15:0	—	—	—	—	—	—	—	—	—	—	—	—	GROUP3	GROUP2	GROUP1	GROUP0	xxxx
0100	SBT5REG6	31:16	BASE[21:6]																xxxx
		15:0	BASE[5:0]						PRI	—	SIZE[4:0]					—	—	—	xxxx
0110	SBT5RD6	31:16	—	—	—	—	—	—	—	—	—	—	—	—	—	—	—	—	xxxx
		15:0	—	—	—	—	—	—	—	—	—	—	—	—	GROUP3	GROUP2	GROUP1	GROUP0	xxxx
0118	SBT5WR6	31:16	—	—	—	—	—	—	—	—	—	—	—	—	—	—	—	—	xxxx
		15:0	—	—	—	—	—	—	—	—	—	—	—	—	GROUP3	GROUP2	GROUP1	GROUP0	xxxx
0120	SBT5REG7	31:16	BASE[21:6]																xxxx
		15:0	BASE[5:0]						PRI	—	SIZE[4:0]					—	—	—	xxxx
0130	SBT5RD7	31:16	—	—	—	—	—	—	—	—	—	—	—	—	—	—	—	—	xxxx
		15:0	—	—	—	—	—	—	—	—	—	—	—	—	GROUP3	GROUP2	GROUP1	GROUP0	xxxx
0138	SBT5WR7	31:16	—	—	—	—	—	—	—	—	—	—	—	—	—	—	—	—	xxxx
		15:0	—	—	—	—	—	—	—	—	—	—	—	—	GROUP3	GROUP2	GROUP1	GROUP0	xxxx
0140	SBT5REG8	31:16	BASE[21:6]																xxxx
		15:0	BASE[5:0]						PRI	—	SIZE[4:0]					—	—	—	xxxx
0150	SBT5RD8	31:16	—	—	—	—	—	—	—	—	—	—	—	—	—	—	—	—	xxxx
		15:0	—	—	—	—	—	—	—	—	—	—	—	—	GROUP3	GROUP2	GROUP1	GROUP0	xxxx

Legend: x = unknown value on Reset; — = unimplemented, read as '0'. Reset values are shown in hexadecimal.
Note: For Reset values listed as 'xxxx', refer to Table 6-5 for the actual Reset values.

© 2020 Microchip Technology Inc.

TABLE 6-7: SYSTEM BUS TARGET 5 REGISTER MAP (CONTINUED)

Virtual Address (BF93_5000)	Register Name	Bit Range	Bits															All Resets
			31/15	30/14	29/13	28/12	27/11	26/10	25/9	24/8	23/7	22/6	21/5	20/4	19/3	18/2	17/1	16/0	
0158	SBT5WR8	31:16	—	—	—	—	—	—	—	—	—	—	—	—	—	—	—	—	xxxx
		15:0	—	—	—	—	—	—	—	—	—	—	—	—	GROUP3	GROUP2	GROUP1	GROUP0	xxxx
0160	SBT5REG9	31:16	BASE[21:6]																xxxx
		15:0	BASE[5:0]						PRI	—	SIZE[4:0]					—	—	—	xxxx
0170	SBT5RD9	31:16	—	—	—	—	—	—	—	—	—	—	—	—	—	—	—	—	xxxx
		15:0	—	—	—	—	—	—	—	—	—	—	—	—	GROUP3	GROUP2	GROUP1	GROUP0	xxxx
0178	SBT5WR9	31:16	—	—	—	—	—	—	—	—	—	—	—	—	—	—	—	—	xxxx
		15:0	—	—	—	—	—	—	—	—	—	—	—	—	GROUP3	GROUP2	GROUP1	GROUP0	xxxx
0180	SBT5REG10	31:16	BASE[21:6]																xxxx
		15:0	BASE[5:0]						PRI	—	SIZE[4:0]					—	—	—	xxxx
0190	SBT5RD10	31:16	—	—	—	—	—	—	—	—	—	—	—	—	—	—	—	—	xxxx
		15:0	—	—	—	—	—	—	—	—	—	—	—	—	GROUP3	GROUP2	GROUP1	GROUP0	xxxx
0198	SBT5WR10	31:16	—	—	—	—	—	—	—	—	—	—	—	—	—	—	—	—	xxxx
		15:0	—	—	—	—	—	—	—	—	—	—	—	—	GROUP3	GROUP2	GROUP1	GROUP0	xxxx

Legend: x = unknown value on Reset; — = unimplemented, read as '0'. Reset values are shown in hexadecimal.
Note: For Reset values listed as 'xxxx', refer to Table 6-5 for the actual Reset values.

TABLE 6-8: SYSTEM BUS TARGET x REGISTER MAP, x = 7, 8, 9, 11, 13

Virtual Address #(1)	Register Name	Bit Range	Bits																All Resets
			31/15	30/14	29/13	28/12	27/11	26/10	25/9	24/8	23/7	22/6	21/5	20/4	19/3	18/2	17/1	16/0	
0020	SBTxELOG1	31:16	MULTI	—	—	—	CODE[3:0]				—	—	—	—	—	—	—	—	0000
		15:0	INITID[7:0]								REGICN[3:0]				—	CMD[2:0]			0000
0024	SBTxELOG2	31:16	—	—	—	—	—	—	—	—	—	—	—	—	—	—	—	—	0000
		15:0	—	—	—	—	—	—	—	—	—	—	—	—	—	—	GROUP[1:0]		0000
0038	SBTxECLRS	31:16	—	—	—	—	—	—	—	—	—	—	—	—	—	—	—	—	0000
		15:0	—	—	—	—	—	—	—	—	—	—	—	—	—	—	—	CLEAR	0000
0038	SBTxECLRM	31:16	—	—	—	—	—	—	—	—	—	—	—	—	—	—	—	—	0000
		15:0	—	—	—	—	—	—	—	—	—	—	—	—	—	—	—	CLEAR	0000
8040	SBTxREG0	31:16	BASE[21:6]																xxxx
		15:0	BASE[5:0]						PRI	—	SIZE[4:0]					—	—	—	xxxx
0050	SBTxRD0	31:16	—	—	—	—	—	—	—	—	—	—	—	—	—	—	—	—	xxxx
		15:0	—	—	—	—	—	—	—	—	—	—	—	—	GROUP3	GROUP2	GROUP1	GROUP0	xxxx
0058	SBTxWR0	31:16	—	—	—	—	—	—	—	—	—	—	—	—	—	—	—	—	xxxx
		15:0	—	—	—	—	—	—	—	—	—	—	—	—	GROUP3	GROUP2	GROUP1	GROUP0	xxxx

Legend: x = unknown value on Reset; — = unimplemented, read as '0'. Reset values are shown in hexadecimal.

Note 1: Target virtual addresses are:

- Target 7 Virtual address = 0xBF93_7000
- Target 8 Virtual address = 0xBF93_8000
- Target 9 Virtual address = 0xBF93_9000
- Target 11 Virtual address = 0xBF93_B000
- Target 13 Virtual address = 0xBF93_D000

2: For Reset values listed as 'xxxx', refer to Table 6-5 for the actual Reset values.

© 2020 Microchip Technology Inc.

TABLE 6-9: SYSTEM BUS TARGET 10 REGISTER MAP

Virtual Address (BF93_A000)	Register Name	Bit Range	Bits																All Resets
			31/15	30/14	29/13	28/12	27/11	26/10	25/9	24/8	23/7	22/6	21/5	20/4	19/3	18/2	17/1	16/0	
0020	SBT10ELOG1	31:16	MULTI	—	—	—	CODE[3:0]				—	—	—	—	—	—	—	—	0000
		15:0	INITID[7:0]								REGICN[3:0]				—	CMD[2:0]			0000
0024	SBT10ELOG2	31:16	—	—	—	—	—	—	—	—	—	—	—	—	—	—	—	—	0000
		15:0	—	—	—	—	—	—	—	—	—	—	—	—	—	—	GROUP[1:0]		0000
0030	SBT10ECLRS	31:16	—	—	—	—	—	—	—	—	—	—	—	—	—	—	—	—	0000
		15:0	—	—	—	—	—	—	—	—	—	—	—	—	—	—	—	CLEAR	0000
0038	SBT10ECLRM	31:16	—	—	—	—	—	—	—	—	—	—	—	—	—	—	—	—	0000
		15:0	—	—	—	—	—	—	—	—	—	—	—	—	—	—	—	CLEAR	0000
0040	SBT10REG0	31:16	BASE[21:6]																xxxx
		15:0	BASE[5:0]						PRI	—	SIZE[4:0]					—	—	—	xxxx
0050	SBT10RD0	31:16	—	—	—	—	—	—	—	—	—	—	—	—	—	—	—	—	xxxx
		15:0	—	—	—	—	—	—	—	—	—	—	—	—	GROUP3	GROUP2	GROUP1	GROUP0	xxxx
0058	SBT10WR0	31:16	—	—	—	—	—	—	—	—	—	—	—	—	—	—	—	—	xxxx
		15:0	—	—	—	—	—	—	—	—	—	—	—	—	GROUP3	GROUP2	GROUP1	GROUP0	xxxx

Legend: x = unknown value on Reset; — = unimplemented, read as '0'. Reset values are shown in hexadecimal.
Note: For Reset values listed as 'xxxx', refer to Table 6-5 for the actual Reset values.

TABLE 6-10: SYSTEM BUS TARGET x REGISTER MAP, WHERE x = 6, 12

Virtual Address #(1)	Register Name	Bit Range	Bits															All Resets
			31/15	30/14	29/13	28/12	27/11	26/10	25/9	24/8	23/7	22/6	21/5	20/4	19/3	18/2	17/1	16/0	
0020	SBTxELOG1	31:16	MULTI	—	—	—	CODE[3:0]				—	—	—	—	—	—	—	—	0000
		15:0	INITID[7:0]								REGICN[3:0]				—	CMD[2:0]			0000
0024	SBTxELOG2	31:16	—	—	—	—	—	—	—	—	—	—	—	—	—	—	—	—	0000
		15:0	—	—	—	—	—	—	—	—	—	—	—	—	—	—	GROUP[1:0]		0000
0030	SBTxECLRS	31:16	—	—	—	—	—	—	—	—	—	—	—	—	—	—	—	—	0000
		15:0	—	—	—	—	—	—	—	—	—	—	—	—	—	—	—	CLEAR	0000
0038	SBTxECLRM	31:16	—	—	—	—	—	—	—	—	—	—	—	—	—	—	—	—	0000
		15:0	—	—	—	—	—	—	—	—	—	—	—	—	—	—	—	CLEAR	0000
0040	SBTxREG0	31:16	BASE[21:6]																xxxx
		15:0	BASE[5:0]						PRI	—	SIZE[4:0]					—	—	—	xxxx
0050	SBTxRD0	31:16	—	—	—	—	—	—	—	—	—	—	—	—	—	—	—	—	xxxx
		15:0	—	—	—	—	—	—	—	—	—	—	—	—	GROUP3	GROUP2	GROUP1	GROUP0	xxxx
0058	SBTxWR0	31:16	—	—	—	—	—	—	—	—	—	—	—	—	—	—	—	—	xxxx
		15:0	—	—	—	—	—	—	—	—	—	—	—	—	GROUP3	GROUP2	GROUP1	GROUP0	xxxx
0060	SBTxREG1	31:16	BASE[21:6]																xxxx
		15:0	BASE[5:0]						PRI	—	SIZE[4:0]					—	—	—	xxxx
0070	SBTxRD1	31:16	—	—	—	—	—	—	—	—	—	—	—	—	—	—	—	—	xxxx
		15:0	—	—	—	—	—	—	—	—	—	—	—	—	GROUP3	GROUP2	GROUP1	GROUP0	xxxx
0078	SBTxWR1	31:16	—	—	—	—	—	—	—	—	—	—	—	—	—	—	—	—	xxxx
		15:0	—	—	—	—	—	—	—	—	—	—	—	—	GROUP3	GROUP2	GROUP1	GROUP0	xxxx

Legend: x = unknown value on Reset; — = unimplemented, read as '0'. Reset values are shown in hexadecimal.

Note 1: Target virtual addresses are:

- Target 6 Virtual address = 0xBF93_6000
- Target 12 Virtual address = 0xBF93_C000

2: For Reset values listed as 'xxxx', refer to Table 6-5 for the actual Reset values.

REGISTER 6-5: SBTxELOG1: SYSTEM BUS TARGET 'x' ERROR LOG REGISTER 1 ('x' = 0-13)

Bit Range	Bit 31/23/15/7	Bit 30/22/14/6	Bit 29/21/13/5	Bit 28/20/12/4	Bit 27/19/11/3	Bit 26/18/10/2	Bit 25/17/9/1	Bit 24/16/8/0
31:24	R/W-0, C	U-0	U-0	U-0	R/W-0, C	R/W-0, C	R/W-0, C	R/W-0, C
	MULTI	—	—	—	CODE[3:0]			
23:16	U-0	U-0	U-0	U-0	U-0	U-0	U-0	U-0
	—	—	—	—	—	—	—	—
15:8	R-0	R-0	R-0	R-0	R-0	R-0	R-0	R-0
	INITID[7:0]							
7:0	R-0	R-0	R-0	R-0	U-0	R-0	R-0	R-0
	REGION[3:0]				—	CMD[2:0]		

Legend:	C = Clearable bit	
R = Readable bit	W = Writable bit	U = Unimplemented bit, read as '0'
-n = Value at POR	'1' = Bit is set	'0' = Bit is cleared

bit 31 **MULTI:** Multiple Permission Violations Status bit
This bit is cleared by writing a '1'.
1 = Multiple errors have been detected
0 = No multiple errors have been detected

bit 30-28 **Unimplemented:** Read as '0'

bit 27-24 **CODE[3:0]:** Error Code bits
Indicates the type of error that was detected. These bits are cleared by writing a '1'.
1111 = Reserved
1101 = Reserved
•
•
•
0011 = Permission violation
0010 = Reserved
0001 = Reserved
0000 = No error

bit 23-16 **Unimplemented:** Read as '0'

Note: Refer to Table 6-5 for the list of available targets and their descriptions.

 © 2020 Microchip Technology Inc.

REGISTER 6-5: SBTxELOG1: SYSTEM BUS TARGET 'x' ERROR LOG REGISTER 1 ('x' = 0-13) (CONTINUED)

bit 15-8 **INITID[7:0]:** Initiator ID of Requester bits
11111111 = Reserved
.
.
.
00010011 = Reserved
00010010 = USB
00010001 = SQI
00010000 = Ethernet Read
00001111 = Ethernet Write
00001110 = Crypto Engine
00001101 = CAN-FD
00001100 = CAN
00001011 = ADC
00001010 = Wi-Fi
00001001 =JTAG
00001000 = DMA Write (DMAPRI (CFGCON0[6]) = 1)
00000111 = DMA Write (DMAPRI (CFGCON0[6]) = 0)
00000110 = DMA Read (DMAPRI (CFGCON0[6]) = 1)
00000101 =DMA Read (DMAPRI (CFGCON0[6]) = 0)
00000100 =Flash Controller (FCPRI(CFGCON0[5]) = 0)
00000011 =Flash Controller (FCPRI(CFGCON0[5]) = 0)
00000010 = CPU (CPUPRI (CFGCON0[7]) = 1)
00000001 = CPU (CPUPRI (CFGCON0[7]) = 0)
00000000 = Reserved

bit 7-4 **REGION[3:0]:** Requested Region Number bits
1111 - 0000 = Target's region that reported a permission group violation

bit 3 **Unimplemented:** Read as '0'

bit **CMD[2:0]:** Transaction Command of the Requester bits
111 = Reserved
110 = Reserved
101 = Write (a non-posted write)
100 = Reserved
011 = Read (a locked read caused by a Read-Modify-Write transaction)
010 = Read
001 = Write
000 = Idle

Note: Refer to Table 6-5 for the list of available targets and their descriptions.

REGISTER 6-6: SBTxELOG2: SYSTEM BUS TARGET 'x' ERROR LOG REGISTER 2 ('x' = 0-13)

Bit Range	Bit 31/23/15/7	Bit 30/22/14/6	Bit 29/21/13/5	Bit 28/20/12/4	Bit 27/19/11/3	Bit 26/18/10/2	Bit 25/17/9/1	Bit 24/16/8/0
31:24	U-0	U-0	U-0	U-0	U-0	U-0	U-0	U-0
	—	—	—	—	—	—	—	—
23:16	U-0	U-0	U-0	U-0	U-0	U-0	U-0	U-0
	—	—	—	—	—	—	—	—
15:8	U-0	U-0	U-0	U-0	U-0	U-0	U-0	U-0
	—	—	—	—	—	—	—	—
7:0	U-0	U-0	U-0	U-0	U-0	U-0	R-0	R-0
	—	—	—	—	—	—	GROUP[1:0]	

Legend:		
R = Readable bit	W = Writable bit	U = Unimplemented bit, read as '0'
-n = Value at POR	'1' = Bit is set	'0' = Bit is cleared

bit 31-3 **Unimplemented:** Read as '0'

bit 1-0 **GROUP[1:0]:** Requested Permissions Group bits
- 11 = Group 3
- 10 = Group 2
- 01 = Group 1
- 00 = Group 0

Note: Refer to Table 6-5 for the list of available targets and their descriptions.

REGISTER 6-7: SBTxECON: SYSTEM BUS TARGET 'x' ERROR CONTROL REGISTER ('x' = 0-13)

Bit Range	Bit 31/23/15/7	Bit 30/22/14/6	Bit 29/21/13/5	Bit 28/20/12/4	Bit 27/19/11/3	Bit 26/18/10/2	Bit 25/17/9/1	Bit 24/16/8/0
31:24	U-0	U-0	U-0	U-0	U-0	U-0	U-0	R/W-0
	—	—	—	—	—	—	—	ERRP
23:16	U-0	U-0	U-0	U-0	U-0	U-0	U-0	U-0
	—	—	—	—	—	—	—	—
15:8	U-0	U-0	U-0	U-0	U-0	U-0	U-0	U-0
	—	—	—	—	—	—	—	—
7:0	U-0	U-0	U-0	U-0	U-0	U-0	U-0	U-0
	—	—	—	—	—	—	—	—

Legend:		
R = Readable bit	W = Writable bit	U = Unimplemented bit, read as '0'
-n = Value at POR	'1' = Bit is set	'0' = Bit is cleared

bit 31-25 **Unimplemented:** Read as '0'

bit 24 **ERRP:** Error Control bit
- 1 = Report protection group violation errors
- 0 = Do not report protection group violation errors

bit 23-0 **Unimplemented:** Read as '0'

Note: Refer to Table 6-5 for the list of available targets and their descriptions.

 © 2020 Microchip Technology Inc.

REGISTER 6-8: SBTxECLRS: SYSTEM BUS TARGET 'x' SINGLE ERROR CLEAR REGISTER ('x' = 0-13)

Bit Range	Bit 31/23/15/7	Bit 30/22/14/6	Bit 29/21/13/5	Bit 28/20/12/4	Bit 27/19/11/3	Bit 26/18/10/2	Bit 25/17/9/1	Bit 24/16/8/0
31:24	U-0	U-0	U-0	U-0	U-0	U-0	U-0	U-0
	—	—	—	—	—	—	—	—
23:16	U-0	U-0	U-0	U-0	U-0	U-0	U-0	U-0
	—	—	—	—	—	—	—	—
15:8	U-0	U-0	U-0	U-0	U-0	U-0	U-0	U-0
	—	—	—	—	—	—	—	—
7:0	U-0	U-0	U-0	U-0	U-0	U-0	U-0	R-0
	—	—	—	—	—	—	—	CLEAR

Legend:		
R = Readable bit	W = Writable bit	U = Unimplemented bit, read as '0'
-n = Value at POR	'1' = Bit is set	'0' = Bit is cleared

bit 31-1 **Unimplemented:** Read as '0'

bit 0 **CLEAR:** Clear Single Error on Read bit
A single error as reported via SBTxELOG1 and SBTxELOG2 is cleared by a read of this register.

Note: Refer to Table 6-5 for the list of available targets and their descriptions.

REGISTER 6-9: SBTxECLRM: SYSTEM BUS TARGET 'x' MULTIPLE ERROR CLEAR REGISTER ('x' = 0-13)

Bit Range	Bit 31/23/15/7	Bit 30/22/14/6	Bit 29/21/13/5	Bit 28/20/12/4	Bit 27/19/11/3	Bit 26/18/10/2	Bit 25/17/9/1	Bit 24/16/8/0
31:24	U-0	U-0	U-0	U-0	U-0	U-0	U-0	U-0
	—	—	—	—	—	—	—	—
23:16	U-0	U-0	U-0	U-0	U-0	U-0	U-0	U-0
	—	—	—	—	—	—	—	—
15:8	U-0	U-0	U-0	U-0	U-0	U-0	U-0	U-0
	—	—	—	—	—	—	—	—
7:0	U-0	U-0	U-0	U-0	U-0	U-0	U-0	R-0
	—	—	—	—	—	—	—	CLEAR

Legend:		
R = Readable bit	W = Writable bit	U = Unimplemented bit, read as '0'
-n = Value at POR	'1' = Bit is set	'0' = Bit is cleared

bit 31-1 **Unimplemented:** Read as '0'

bit 0 **CLEAR:** Clear Multiple Errors on Read bit
Multiple errors as reported via SBTxELOG1 and SBTxELOG2 is cleared by a read of this register.

Note: Refer to Table 6-5 for the list of available targets and their descriptions.

REGISTER 6-10: SBTxREGy: SYSTEM BUS TARGET 'x' REGION 'y' REGISTER ('x' = 0-13; 'y' = 0-10)

Bit Range	Bit 31/23/15/7	Bit 30/22/14/6	Bit 29/21/13/5	Bit 28/20/12/4	Bit 27/19/11/3	Bit 26/18/10/2	Bit 25/17/9/1	Bit 24/16/8/0
31:24	R/W-0	R/W-0	R/W-0	R/W-0	R/W-0	R/W-0	R/W-0	R/W-0
	BASE[21:14]							
23:16	R/W-0	R/W-0	R/W-0	R/W-0	R/W-0	R/W-0	R/W-0	R/W-0
	BASE[13:6]							
15:8	R/W-0	R/W-0	R/W-0	R/W-0	R/W-0	R/W-0	R-0	U-0
	BASE[5:0]						PRI	—
7:0	R/W-0	R/W-0	R/W-0	R/W-0	R/W-0	U-0	U-0	U-0
	SIZE[4:0]					—	—	—

Legend:		
R = Readable bit	W = Writable bit	U = Unimplemented bit, read as '0'
-n = Value at POR	'1' = Bit is set	'0' = Bit is cleared

bit 31-10 **BASE[21:0]:** Region Base Address bits

bit 9 **PRI:** Region Priority Level bit
1 = Level 2
0 = Level 1

bit 8 **Unimplemented:** Read as '0'

bit 7-3 **SIZE[4:0]:** Region Size bits
Permissions for a region are only active is the SIZE is non-zero.
11111 = Region size = $2^{(SIZE - 1)}$ x 1024 (bytes)
•
•
•
00001 = Region size = $2^{(SIZE - 1)}$ x 1024 (bytes)
00000 = Region is not present

bit 2-0 **Unimplemented:** Read as '0'

Note 1: Refer to Table 6-5 for the list of available targets and their descriptions.

2: For some target regions, certain bits in this register are read-only with preset values. See Table 6-5 for more information.

 © 2020 Microchip Technology Inc.

REGISTER 6-11: SBTxRDy: SYSTEM BUS TARGET 'x' REGION 'y' READ PERMISSIONS REGISTER ('x' = 0-13; 'y' = 0-10)

Bit Range	Bit 31/23/15/7	Bit 30/22/14/6	Bit 29/21/13/5	Bit 28/20/12/4	Bit 27/19/11/3	Bit 26/18/10/2	Bit 25/17/9/1	Bit 24/16/8/0
31:24	U-0	U-0	U-0	U-0	U-0	U-0	U-0	U-0
	—	—	—	—	—	—	—	—
23:16	U-0	U-0	U-0	U-0	U-0	U-0	U-0	U-0
	—	—	—	—	—	—	—	—
15:8	U-0	U-0	U-0	U-0	U-0	U-0	U-0	U-0
	—	—	—	—	—	—	—	—
7:0	U-0	U-0	U-0	U-0	R/W-0	R/W-1	R/W-1	R/W-1
	—	—	—	—	GROUP3	GROUP2	GROUP1	GROUP0

Legend:		
R = Readable bit	W = Writable bit	U = Unimplemented bit, read as '0'
-n = Value at POR	'1' = Bit is set	'0' = Bit is cleared

bit 31-4 **Unimplemented:** Read as '0'

bit 3 **Group3:** Group3 Read Permissions bits
- 1 = Privilege Group 3 has read permission
- 0 = Privilege Group 3 does not have read permission

bit 2 **Group2:** Group2 Read Permissions bits
- 1 = Privilege Group 2 has read permission
- 0 = Privilege Group 2 does not have read permission

bit 1 **Group1:** Group1 Read Permissions bits
- 1 = Privilege Group 1 has read permission
- 0 = Privilege Group 1 does not have read permission

bit 0 **Group0:** Group0 Read Permissions bits
- 1 = Privilege Group 0 has read permission
- 0 = Privilege Group 0 does not have read permission

Note 1: Refer to Table 6-5 for the list of available targets and their descriptions.

2: For some target regions, certain bits in this register are read-only with preset values. See Table 6-5 for more information.

REGISTER 6-12: SBTxWRy: SYSTEM BUS TARGET 'x' REGION 'y' WRITE PERMISSIONS REGISTER ('x' = 0-13; 'y' = 0-10)

Bit Range	Bit 31/23/15/7	Bit 30/22/14/6	Bit 29/21/13/5	Bit 28/20/12/4	Bit 27/19/11/3	Bit 26/18/10/2	Bit 25/17/9/1	Bit 24/16/8/0
31:24	U-0	U-0	U-0	U-0	U-0	U-0	U-0	U-0
	—	—	—	—	—	—	—	—
23:16	U-0	U-0	U-0	U-0	U-0	U-0	U-0	U-0
	—	—	—	—	—	—	—	—
15:8	U-0	U-0	U-0	U-0	U-0	U-0	U-0	U-0
	—	—	—	—	—	—	—	—
7:0	U-0	U-0	U-0	U-0	R/W-0	R/W-1	R/W-1	R/W-1
	—	—	—	—	GROUP3	GROUP2	GROUP1	GROUP0

Legend:		
R = Readable bit	W = Writable bit	U = Unimplemented bit, read as '0'
-n = Value at POR	'1' = Bit is set	'0' = Bit is cleared

bit 31-4 **Unimplemented:** Read as '0'

bit 3 **Group3:** Group 3 Write Permissions bits
- 1 = Privilege Group 3 has write permission
- 0 = Privilege Group 3 does not have write permission

bit 2 **Group2:** Group 2 Write Permissions bits
- 1 = Privilege Group 2 has write permission
- 0 = Privilege Group 2 does not have write permission

bit 1 **Group1:** Group 1 Write Permissions bits
- 1 = Privilege Group 1 has write permission
- 0 = Privilege Group 1 does not have write permission

bit 0 **Group0:** Group 0 Write Permissions bits
- 1 = Privilege Group 0 has write permission
- 0 = Privilege Group 0 does not have write permission

Note 1: Refer to Table 6-5 for the list of available targets and their descriptions.

2: For some target regions, certain bits in this register are read-only with preset values. See Table 6-5 for more information.

 © 2020 Microchip Technology Inc.

7.0 RESETS

Note:	This data sheet summarizes the features of the PIC32MZ W1 family of devices. It is not intended to be a comprehensive reference source. To complement the information in this data sheet, refer to **Section 7. "Resets"** (DS60001118) in the *"PIC32 Family Reference Manual"*, which is available from the Microchip web site (www.microchip.com/PIC32).

The Reset module combines all Reset sources and controls the device master Reset signal, SYSRST.

The device Reset sources are as follows:

- Power-on Reset (POR)
- Master Clear Reset ($\overline{\text{MCLR}}$)
- Software Reset (SWR)
- Watchdog Timer Reset (WDTR)
- Brown-out Reset (BOR)
- Configuration Mismatch Reset (CMR)
- Deadman Timer Reset (DMTR)

A simplified block diagram of the Reset module is illustrated in Figure 7-1.

FIGURE 7-1: SYSTEM RESET BLOCK DIAGRAM

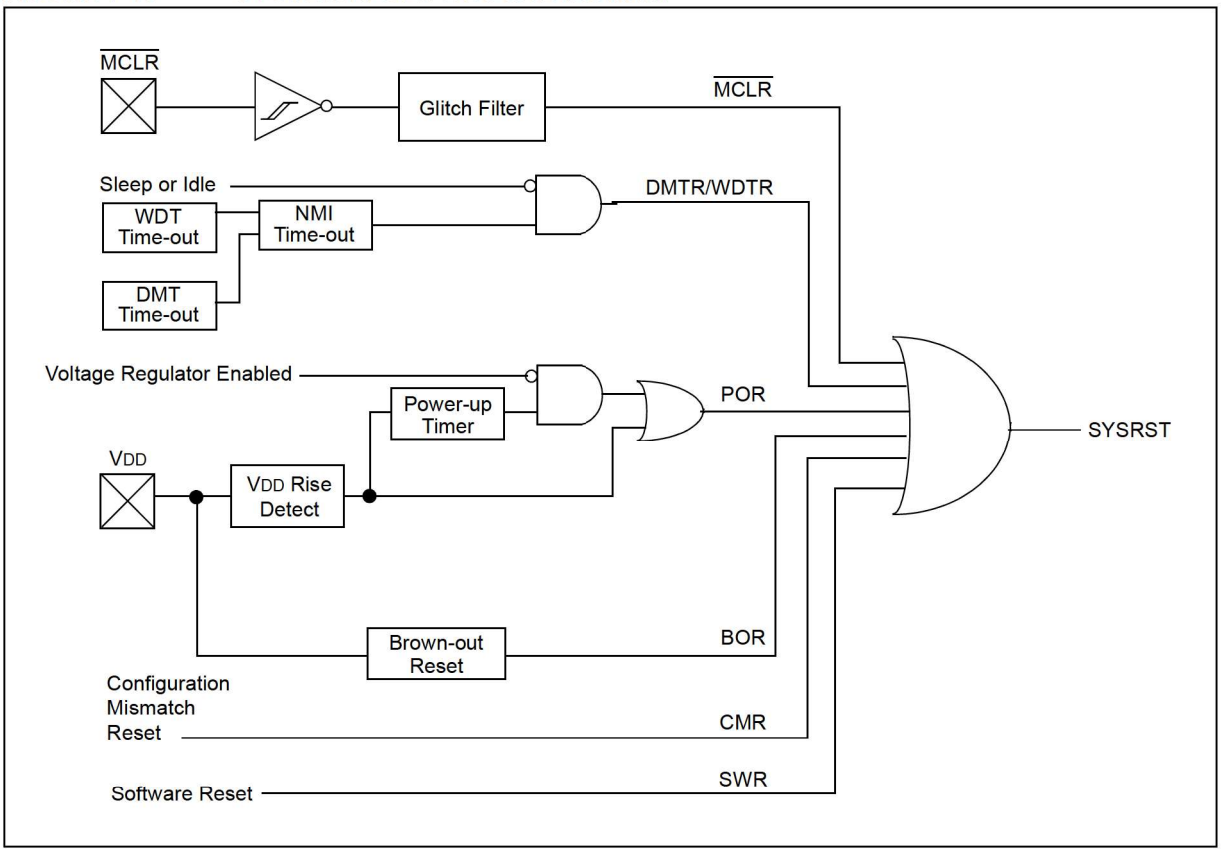

7.1 Reset Control Registers

TABLE 7-1: RESETS REGISTER MAP

Virtual Address (BF80_#)	Register Name(1)	Bit Range	Bits																All Resets
			31/15	30/14	29/13	28/12	27/11	26/10	25/9	24/8	23/7	22/6	21/5	20/4	19/3	18/2	17/1	16/0	
1260	RCON	31:16	PORIO	PORCORE	—	—	BCFGERR	BCFGFAIL	NVMLTA	NVMEOL	—	—	—	—	—	—	VBPOR	VBAT	0000
		15:0	—	—	—	—	—	DPSLP	CMR	—	EXTR	SWR	DMTO	WDTO	SLEEP	IDLE	BOR	POR	0000
1270	RSWRST	31:16	—	—	—	—	—	—	—	—	—	—	—	—	—	—	—	—	0000
		15:0	—	—	—	—	—	—	—	—	—	—	—	—	—	—	—	SWRST	0000
1280	RNMICON	31:16	—	—	—	—	—	—	DMTO	WDTR	SWNMI	—	—	—	GNMI	LVD	CF	WDTS	0000
		15:0	NMICNT[15:0]																0000

Legend: x = unknown value on Reset; — = unimplemented, read as '0'. Reset values are shown in hexadecimal.

Note 1: All registers have corresponding CLR, SET and INV registers at their virtual addresses, plus offsets of 0x4, 0x8 and 0xC, respectively. See **Section 13.3 "CLR, SET, and INV Registers"** for more information.

© 2020 Microchip Technology Inc.

REGISTER 7-1: RCON: RESET CONTROL REGISTER

Bit Range	Bit 31/23/15/7	Bit 30/22/14/6	Bit 29/21/13/5	Bit 28/20/12/4	Bit 27/19/11/3	Bit 26/18/10/2	Bit 25/17/9/1	Bit 24/16/8/0
31:24	R/W/HS-0	R/W/HS-0	U-0	U-0	R/W-0, HS	R/W-0, HS	R/W/HS-0	R/W/HS-0
	PORIO(1)	PORCORE(1)	—	—	BCFGERR	BCFGFAIL	NVMLTA	NVMEOL
23:16	U-0	U-0	U-0	U-0	U-0	U-0	R/W-0, HS	R/W-0, HS
	—	—	—	—	—	—	VBPOR	VBAT
15:8	U-0	U-0	U-0	U-0	U-0	R/W-0, HS	R/W-0, HS	U-0
	—	—	—	—	—	DPSLP(1)	CMR	—
7:0	R/W-0, HS	R/W-0, HS	R/W-0, HS	R/W-0, HS	R/W-0, HS	R/W-0, HS	R/W-1, HS	R/W-1, HS
	EXTR	SWR	DMTO	WDTO	SLEEP	IDLE	BOR(1)	POR(1)

Legend:	HS = Hardware Set	HC = Hardware Cleared	
R = Readable bit	W = Writable bit	U = Unimplemented bit, read as '0'	
-n = Value at POR	'1' = Bit is set	'0' = Bit is cleared	x = Bit is unknown

bit 31 **PORIO:** IO Voltage POR Flag bit(1)
1 = Power-up Reset occurs due to IO voltage
0 = Power-up Reset does not occur due to IO voltage
Set by hardware at detection of an IO POR event.

Note: User may write this bit to '1'. Does not cause a POR_IO.

bit 30 **PORCORE**: Core Voltage POR Flag bit(1)
1 = Power-up Reset occurs due to core voltage
0 = Power-up Reset does not occur due to core voltage
Set by hardware at detection of a core POR event.

Note: User may write this bit to '1'. Does not cause a POR_CORE.

bit 29-28 **Unimplemented:** Read as '0'

bit 27 **BCFGERR:** BCFG Error Flag bit
1 = BCFG error occurs
0 = BCFG error does not occur
A primary BCFG value had an error but the secondary BCFG value was valid and used.

bit 26 **BCFGFAIL:** BCFG Failure Flag bit
1 = BCFG failure occurs
0 = BCFG failure does not occur

bit 25 **NVMLTA**: NVM Life Time Alert Flag bit
1 = NVM LTA error occurs
0 = NVM LTA error does not occur
NVM Life Time Alert - due to charge leakage the NVM is nearing End of Life (EOL).

bit 24 **NVMEOL**: NVM EOL Flag bit
1 = NVM EOL failure occurs
0 = NVM EOL failure does not occur
NVM EOL - may not be visible since the part does not come out of Reset if the bit is asserted.

bit 23-18 **Unimplemented:** Read as '0'

bit 17 **VBPOR**: VBPOR Mode Flag bit
1 = VBAT domain POR occurs
0 = VBAT domain POR does not occur

Note: User may write this bit to '1'. Does not cause a VBPOR event.

bit 16 **VBAT**: VBAT Mode Flag bit
1 = POR exit from VBAT occurs. A true POR must be established with the valid VBAT voltage level on the VBAT pin.
0 = POR exit from VBAT does not occur

Note: User may write this bit to '1'. Does not cause a VBAT event.

bit 15-11 **Unimplemented:** Read as '0'

REGISTER 7-1: RCON: RESET CONTROL REGISTER (CONTINUED)

bit 10 **DPSLP**: Deep Sleep Mode Flag bit(1)
1 = Deep Sleep mode occurs
0 = Deep Sleep mode does not occur
Set by hardware at time of entry into Deep Sleep mode.
Note: User may write this bit to '1'. Does not cause a DPSLP event.

bit 9 **CMR:** Configuration Mismatch Reset Flag bit
1 = Configuration mismatch Reset event occurs
0 = Configuration mismatch Reset event does not occur
Note: User may write this bit to '1'. Does not cause a mismatch Reset.

bit 8 **Unimplemented:** Read as '0'

bit 7 **EXTR:** External Reset ($\overline{\text{MCLR}}$) Pin Flag bit
1 = $\overline{\text{MCLR}}$ occurs
0 = $\overline{\text{MCLR}}$ does not occur
Note: User may write this bit to '1'. Does not cause a $\overline{\text{MCLR}}$.

bit 6 **SWR:** Software Reset Flag bit
1 = SWR is executed
0 = SWR is not executed
Note: User may write this bit to '1'. Does not cause SWR.

bit 5 **DMTO:** Deadman Timer Time-Out Flag bit
1 = DMT time-out occurs and causes a Reset
0 = DMT time-out does not occur
Note: User may write this bit to '1'. Does not cause DMT Reset.

bit 4 **WDTO:** Watchdog Timer Time-Out Flag bit
1 = WDT time-out occurs and causes a Reset
0 = WDT time-out does not occur

bit 3 **SLEEP:** Wake from Sleep Flag bit
1 = Device is in Sleep mode
0 = Device is not in Sleep mode
Note: User may write this bit to '1'. Does not invoke Sleep mode.

bit 2 **IDLE:** Wake from Idle Flag bit
1 = Device in Idle mode
0 = Device in not in Idle mode
Note: User may write this bit to '1'. Does not invoke Idle mode.

bit 1 **BOR:** Brown-out Reset Flag bit(1)
1 = Brown-out Reset occurs
0 = Brown-out Reset does not occur
Set by hardware at detection of a BOR event.
Note: User may write this bit to '1'. Does not cause a BOR.

bit 0 **POR:** Power-On Reset Flag bit(1)
1 = Power-up Reset occurs
0 = Power-up Reset does not occur
Set by hardware at detection of a POR event.
Note: User may write this bit to '1'. Does not cause a POR.

Note 1: User software must clear this bit to view the next detection.

 © 2020 Microchip Technology Inc.

REGISTER 7-2: RSWRST: SOFTWARE RESET REGISTER

Bit Range	Bit 31/23/15/7	Bit 30/22/14/6	Bit 29/21/13/5	Bit 28/20/12/4	Bit 27/19/11/3	Bit 26/18/10/2	Bit 25/17/9/1	Bit 24/16/8/0
31:24	U-0	U-0	U-0	U-0	U-0	U-0	U-0	U-0
	—	—	—	—	—	—	—	—
23:16	U-0	U-0	U-0	U-0	U-0	U-0	U-0	U-0
	—	—	—	—	—	—	—	—
15:8	U-0	U-0	U-0	U-0	U-0	U-0	U-0	U-0
	—	—	—	—	—	—	—	—
7:0	U-0	U-0	U-0	U-0	U-0	U-0	U-0	W-0, HC
	—	—	—	—	—	—	—	SWRST(1,2)

Legend:	HC = Hardware Cleared		
R = Readable bit	W = Writable bit	U = Unimplemented bit, read as '0'	
-n = Value at POR	'1' = Bit is set	'0' = Bit is cleared	x = Bit is unknown

bit 31-1 **Unimplemented:** Read as '0'

bit 0 **SWRST:** Software Reset Trigger bit(1,2)
1 = Enable SWR event
0 = No effect

Note 1: The system unlock sequence must be performed before the SWRST bit can be written. Refer to *Oscillators with Enhanced PLL* in the *"PIC32 Family Reference Manual"* for details. Once this bit is set, any read of the RSWRST register triggers a Reset.

REGISTER 7-3: RNMICON: NON-MASKABLE INTERRUPT (NMI) CONTROL REGISTER

Bit Range	Bit 31/23/15/7	Bit 30/22/14/6	Bit 29/21/13/5	Bit 28/20/12/4	Bit 27/19/11/3	Bit 26/18/10/2	Bit 25/17/9/1	Bit 24/16/8/0
31:24	U-0	U-0	U-0	U-0	U-0	U-0	R/W-0	R/W-0
	—	—	—	—	—	—	DMTO	WDTR
23:16	R/W-0	U-0	U-0	U-0	R/W-0	U-0	R/W-0	R/W-0
	SWNMI	—	—	—	GNMI	LVD	CF	WDTS
15:8	R/W-0	R/W-0	R/W-0	R/W-0	R/W-0	R/W-0	R/W-0	R/W-0
	NMICNT[15:8]							
7:0	R/W-0	R/W-0	R/W-0	R/W-0	R/W-0	R/W-0	R/W-0	R/W-0
	NMICNT[7:0]							

Legend:			
R = Readable bit	W = Writable bit	U = Unimplemented bit, read as '0'	
-n = Value at POR	'1' = Bit is set	'0' = Bit is cleared	x = Bit is unknown

bit 31-26 **Unimplemented:** Read as '0'

bit 25 **DMTO:** Deadman Timer Time-Out Flag bit
This causes a Reset when NMICNT expires.
1 = DMT time-out occurs and causes a NMI
0 = DMT time-out does not occur

Note: User may write this bit to '1'. Does cause a user initiated DMT NMI event and NMICNT start.

bit 24 **WDTR**: Watchdog Timer Time-Out in Run Flag bit
This may cause a Reset if NMICNT expires.
1 = WDT time-out occurs and causes a NMI
0 = WDT time-out does not occur

Note: User may write this bit to '1'. Does cause a user initiated WDT NMI event and NMICNT start.

bit 23 **SWNMI:** Software NMI Trigger bit
1 = Writing a '1' to this bit causes an NMI to be generated
0 = Writing a '0' to this bit does not have any effect

bit 22-20 **Unimplemented:** Read as '0'

bit 19 **GNMI:** External/Generic NMI Event bit
1 = Generic NMI event is detected and causes an NMI
0 = Generic NMI event is not detected

Note: User may write this bit to '1'. Does cause a user initiated External/Generic NMI event.

bit 18 **LVD:** Low-voltage Detect Event bit
1 = LVD detects a Low-voltage condition and causes an NMI
0 = LVD does not detect a Low-voltage condition

Note: User may write this bit to '1'. Does cause a user initiated LVD NMI event.

bit 17 **CF:** Clock Fail Detect bit (read/clearable by application)
1 = FSCM detects clock failure and causes an NMI
0 = FSCM does not detect clock failure

Note 1: Writing a '1' to the CF bit causes a user initiated clock failure NMI event, but does not actually cause a clock switch.

2: Reset when a valid clock switching sequence is initiated by the clock switch state machine set when clock fail detected.

Note: The system unlock sequence must be performed before the SWRST bit can be written. Refer to *Oscillators with Enhanced PLL* in the *"PIC32 Family Reference Manual"* for details.

bit 16 **WDTS:** WDTS: Watch-Dog Timer Time-Out in Sleep Flag bit
1 = WDT time-out occurs during Sleep mode and causes a wake-up from sleep
0 = WDT time-out does not occur during Sleep mode

Note: User may write this bit to '1'. Does cause a user initiated WDT NMI event.

 © 2020 Microchip Technology Inc.

REGISTER 7-3: RNMICON: NON-MASKABLE INTERRUPT (NMI) CONTROL REGISTER (CONTINUED)

bit 15-0 **NMICNT[15:0]:** NMI Reset Counter bit

This bit field specifies the reload value used by the NMI Reset counter.
1111111111111111–0000000000000001 = Number of SYSCLK cycles before a device Reset occurs(2).
If the NMI event is cleared before the counter reached zero, then device Reset is not asserted.
0000000000000000 = No delay between NMI assertion and device Reset event

Note 1: The system unlock sequence must be done before this register can be written.

2: When a WDT NMI event (when not in Sleep mode) or a DMT NMI event is triggered, the NMICNT starts decrementing. When NMICNT reaches zero, the device is Reset. This NMI Reset counter is only applicable to these two specific NMI events.

Note: The system unlock sequence must be performed before the SWRST bit can be written. Refer to *Oscillators with Enhanced PLL* in the *"PIC32 Family Reference Manual"* for details.

 © 2020 Microchip Technology Inc.

8.0 CPU EXCEPTIONS AND INTERRUPT CONTROLLER

Note: This data sheet summarizes the features of the PIC32MZ W1 family of devices. It is not intended to be a comprehensive reference source. To complement the information in this data sheet, refer to **Section 8. "Interrupts"** (DS60001108) and **Section 50. "CPU for Devices with MIPS32® microAptiv™ and M-Class Cores"** (DS60001192) of the *"PIC32 Family Reference Manual"*, which is available from the Microchip web site (www.microchip.com/PIC32).

PIC32MZ W1 device generates interrupt requests in response to interrupt events from peripheral modules. The Interrupt Controller module exists outside of the CPU and prioritizes the interrupt events before presenting them to the CPU.

The CPU handles interrupt events as part of the exception handling mechanism, which is described in **Section 8.1 "CPU Exceptions"**.

The Interrupt Controller module includes the following features:

- Up to 126 interrupt sources
- Seven user selectable priority levels with four sub-priority levels within a priority level
- Fixed priority within a specified user sub-priority level
- Unique interrupt offset for each source
- Single vector mode with interrupt number status "registerfwifi"
- Software can generate any peripheral interrupt
- Seven shadow register sets that can be used for any priority level, eliminating software context switch and reducing interrupt latency
- Five external interrupts with edge polarity control

Figure 8-1 shows the block diagram for the Interrupt Controller and CPU exceptions.

FIGURE 8-1: CPU EXCEPTIONS AND INTERRUPT CONTROLLER MODULE BLOCK DIAGRAM

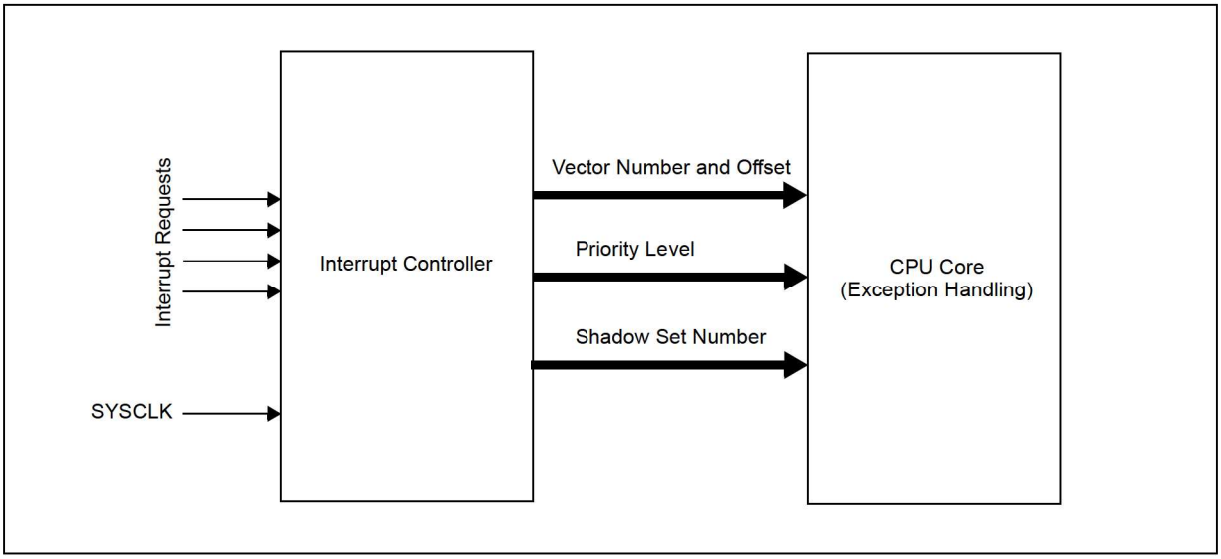

8.1 CPU Exceptions

CPU coprocessor 0 contains the logic for identifying and managing exceptions. Exceptions can be caused by a variety of sources, including boundary cases in data, external events or program errors. Table 8-1 lists the exception types in order of priority.

TABLE 8-1: MIPS32® M-CLASS MICROPROCESSOR CORE EXCEPTION TYPES

Exception Type (In Order of Priority)	Description	Branches to	Status Bits Set	Debug Bits Set	EXCCODE	XC32 Function Name
Highest Priority						
Reset	Assertion $\overline{\text{MCLR}}$ or a POR.	0xBFC0_0000	BEV, ERL	—	—	_on_reset
Soft Reset	Assertion of a software Reset.	0xBFC0_0000	BEV, SR, ERL	—	—	_on_reset
DSS	EJTAG debug single step.	0xBFC0_0480	—	DSS	—	—
DINT	EJTAG debug interrupt. Caused by the assertion of the external EJ_DINT input or by setting the EjtagBrk bit in the ECR register.	0xBFC0_0480	—	DINT	—	—
NMI	Assertion of NMI signal.	0xBFC0_0000	BEV, NMI, ERL	—	—	_nmi_handler
Interrupt	Assertion of unmasked hardware or software interrupt signal.	See Table 8-2.	IPL[2:0]	—	0x00	See Table 8-2.
DIB	EJTAG debug hardware instruction break matched.	0xBFC0_0480	—	DIB	—	—
AdEL	Fetch address alignment error. Fetch reference to protected address.	0xBFC0_0380	EXL	—	0x04	_general_exception_handler
IBE	Instruction fetch bus error.	0xBFC0_0380	EXL	—	0x06	_general_exception_handler
Execute Exception	An instruction-based exception occurred: Integer overflow, trap, system call, breakpoint, floating point, or DSP ASE state disabled exception.	0xBFC0_0380	EXL	—	0x08-0x0C	_general_exception_handler
Tr	Execution of a trap (when trap condition is true).	0xBFC0_0380	EXL	—	0x0D	_general_exception_handler
DDBL/DDBS	EJTAG Data Address Break (address only) or EJTAG data value break on store (address + value).	0xBFC0_0480	—	DDBL or DDBS	—	—
AdEL	Load address alignment error. User mode load reference to kernel address.	0xBFC0_0380	EXL	—	0x04	_general_exception_handler
AdES	Store address alignment error. User mode store to kernel address.	0xBFC0_0380	EXL	—	0x05	_general_exception_handler

© 2020 Microchip Technology Inc.

TABLE 8-1: MIPS32® M-CLASS MICROPROCESSOR CORE EXCEPTION TYPES (CONTINUED)

Exception Type (In Order of Priority)	Description	Branches to	Status Bits Set	Debug Bits Set	EXCCODE	XC32 Function Name
DBE	Load or store bus error.	0xBFC0_0380	EXL	—	0x07	_general_exception_handler
DDBL	EJTAG data hardware breakpoint matched in load data compare.	0xBFC0_0480	—	DDBL	—	—
CBrk	EJTAG complex breakpoint.	0xBFC0_0480	—	DIBIMPR, DDBLIMPR, and/or DDBSIMPR	—	—
Lowest Priority						

8.2 Interrupts

The PIC32MZ W1 uses variable offsets for vector spacing. This allows the interrupt vector spacing to be configured according to application needs. A unique interrupt vector offset can be set for each vector using its associated OFFx register.

For details on the variable offset feature, refer to **8.5.2 "Variable Offset"** in **Section 8. "Interrupt Controller"** (DS60001108) of the *"PIC32 Family Reference Manual"*.

Table 8-2 provides the interrupt IRQ, vector and bit location information.

TABLE 8-2: INTERRUPT IRQ, VECTOR, AND BIT LOCATION

Interrupt Source(1)	XC32 Vector Name	IRQ #	Vector #	Interrupt Bit Location				Persistent Interrupt
				Flag	Enable	Priority	Sub-priority	
Highest Natural Order Priority								
Core Timer Interrupt	_CORE_TIMER_VECTOR	0	OFF000[17:1]	IFS0[0]	IEC0[0]	IPC0[4:2]	IPC0[1:0]	No
Core Software Interrupt 0	_CORE_SOFTWARE_0_VECTOR	1	OFF001[17:1]	IFS0[1]	IEC0[1]	IPC0[12:10]	IPC0[9:8]	No
Core Software Interrupt 1	_CORE_SOFTWARE_1_VECTOR	2	OFF002[17:1]	IFS0[2]	IEC0[2]	IPC0[20:18]	IPC0[17:16]	No
External Interrupt 0	_EXTERNAL_0_VECTOR	3	OFF003[17:1]	IFS0[3]	IEC0[3]	IPC0[28:26]	IPC0[25:24]	No
Timer1	_TIMER_1_VECTOR	4	OFF004[17:1]	IFS0[4]	IEC0[4]	IPC1[4:2]	IPC1[1:0]	No
Input Capture 1 Error	_INPUT_CAPTURE_1_ERROR_VECTOR	5	OFF005[17:1]	IFS0[5]	IEC0[5]	IPC1[12:10]	IPC1[9:8]	Yes
Input Capture 1	_INPUT_CAPTURE_1_VECTOR	6	OFF006[17:1]	IFS0[6]	IEC0[6]	IPC1[20:18]	IPC1[17:16]	Yes
Output Compare 1	_OUTPUT_COMPARE_1_VECTOR	7	OFF007[17:1]	IFS0[7]	IEC0[7]	IPC1[28:26]	IPC1[25:24]	No
External Interrupt 1	_EXTERNAL_1_VECTOR	8	OFF008[17:1]	IFS0[8]	IEC0[8]	IPC2[4:2]	IPC2[1:0]	No
Timer2	_TIMER_2_VECTOR	9	OFF009[17:1]	IFS0[9]	IEC0[9]	IPC2[12:10]	IPC2[9:8]	No
Input Capture 2 Error	_INPUT_CAPTURE_2_ERROR_VECTOR	10	OFF010[17:1]	IFS0[10]	IEC0[10]	IPC2[20:18]	IPC2[17:16]	Yes
Input Capture 2	_INPUT_CAPTURE_2_VECTOR	11	OFF011[17:1]	IFS0[11]	IEC0[11]	IPC2[28:26]	IPC2[25:24]	Yes
Output Compare 2	_OUTPUT_COMPARE_2_VECTOR	12	OFF012[17:1]	IFS0[12]	IEC0[12]	IPC3[4:2]	IPC3[1:0]	No
External Interrupt 2	_EXTERNAL_2_VECTOR	13	OFF013[17:1]	IFS0[13]	IEC0[13]	IPC3[12:10]	IPC3[9:8]	No
Timer3	_TIMER_3_VECTOR	14	OFF014[17:1]	IFS0[14]	IEC0[14]	IPC3[20:18]	IPC3[17:16]	No
Input Capture 3 Error	_INPUT_CAPTURE_3_ERROR_VECTOR	15	OFF015[17:1]	IFS0[15]	IEC0[15]	IPC3[28:26]	IPC3[25:24]	Yes
Input Capture 3	_INPUT_CAPTURE_3_VECTOR	16	OFF016[17:1]	IFS0[16]	IEC0[16]	IPC4[4:2]	IPC4[1:0]	Yes
Output Compare 3	_OUTPUT_COMPARE_3_VECTOR	17	OFF017[17:1]	IFS0[17]	IEC0[17]	IPC4[12:10]	IPC4[9:8]	No
External Interrupt 3	_EXTERNAL_3_VECTOR	18	OFF018[17:1]	IFS0[18]	IEC0[18]	IPC4[20:18]	IPC4[17:16]	No
Timer4	_TIMER_4_VECTOR	19	OFF019[17:1]	IFS0[19]	IEC0[19]	IPC4[28:26]	IPC4[25:24]	No
Input Capture 4 Error	_INPUT_CAPTURE_4_ERROR_VECTOR	20	OFF020[17:1]	IFS0[20]	IEC0[20]	IPC5[4:2]	IPC5[1:0]	Yes
Input Capture 4	_INPUT_CAPTURE_4_VECTOR	21	OFF021[17:1]	IFS0[21]	IEC0[21]	IPC5[12:10]	IPC5[9:8]	Yes
Output Compare 4	_OUTPUT_COMPARE_4_VECTOR	22	OFF022[17:1]	IFS0[22]	IEC0[22]	IPC5[20:18]	IPC5[17:16]	No
External Interrupt 4	_EXTERNAL_4_VECTOR	23	OFF023[17:1]	IFS0[23]	IEC0[23]	IPC5[28:26]	IPC5[25:24]	No
Timer5	_TIMER_5_VECTOR	24	OFF024[17:1]	IFS0[24]	IEC0[24]	IPC6[4:2]	IPC6[1:0]	No
FC Programming Event	_FLASH_CONTROL_VECTOR	30	OFF030[17:1]	IFS0[30]	IEC0[30]	IPC7[20:18]	IPC7[17:16]	No

© 2020 Microchip Technology Inc.

TABLE 8-2: INTERRUPT IRQ, VECTOR, AND BIT LOCATION (CONTINUED)

Interrupt Source(1)	XC32 Vector Name	IRQ #	Vector #	Interrupt Bit Location				Persistent Interrupt
				Flag	Enable	Priority	Sub-priority	
Prefetch module Event	_PREFETCH_VECTOR	31	OFF031[17:1]	IFS0[31]	IEC0[31]	IPC7[28:26]	IPC7[25:24]	No
PFW CRC Event	_PFW_CRC_VECTOR	32	OFF032[17:1]	IFS1[0]	IEC1[0]	IPC8[4:2]	IPC8[1:0]	No
Real Time Clock	_RTCC_VECTOR	33	OFF033[17:1]	IFS1[1]	IEC1[1]	IPC8[12:10]	IPC8[9:8]	No
Combined Interrupt	_USB_VECTOR	34	OFF034[17:1]	IFS1[2]	IEC1[2]	IPC8[20:18]	IPC8[17:16]	Yes
SPI 1 Fault	_SPI1_FAULT_VECTOR	35	OFF035[17:1]	IFS1[3]	IEC1[3]	IPC8[28:26]	IPC8[25:24]	Yes
SPI 1 Receive Done	_SPI1_RX_VECTOR	36	OFF036[17:1]	IFS1[4]	IEC1[4]	IPC9[4:2]	IPC9[1:0]	Yes
SPI 1 Transfer Done	_SPI1_TX_VECTOR	37	OFF037[17:1]	IFS1[5]	IEC1[5]	IPC9[12:10]	IPC9[9:8]	Yes
UART1 Fault	_UART1_FAULT_VECTOR	38	OFF038[17:1]	IFS1[6]	IEC1[6]	IPC9[20:18]	IPC9[17:16]	Yes
UART1 Receive Done	_UART1_RX_VECTOR	39	OFF039[17:1]	IFS1[7]	IEC1[7]	IPC9[28:26]	IPC9[25:24]	No
UART1 Transfer Done	_UART1_TX_VECTOR	40	OFF040[17:1]	IFS1[8]	IEC1[8]	IPC10[4:2]	IPC10[1:0]	No
I2C 1 Bus Collision Event	_I2C1_BUS_VECTOR	41	OFF041[17:1]	IFS1[9]	IEC1[9]	IPC10[12:10]	IPC10[9:8]	Yes
I2C 1 Slave Event	_I2C1_SLAVE_VECTOR	42	OFF042[17:1]	IFS1[10]	IEC1[10]	IPC10[20:18]	IPC10[17:16]	Yes
I2C 1 Master Event	_I2C1_MASTER_VECTOR	43	OFF043[17:1]	IFS1[11]	IEC1[11]	IPC10[28:26]	IPC10[25:24]	Yes
PortA Input Change Interrupt	_CHANGE_NOTICE_A_VECTOR	44	OFF044[17:1]	IFS1[12]	IEC1[12]	IPC11[4:2]	IPC11[1:0]	Yes
PortB Input Change Interrupt	_CHANGE_NOTICE_B_VECTOR	45	OFF045[17:1]	IFS1[13]	IEC1[13]	IPC11[12:10]	IPC11[9:8]	Yes
PortC Input Change Interrupt	_CHANGE_NOTICE_C_VECTOR	46	OFF046[17:1]	IFS1[14]	IEC1[14]	IPC11[20:18]	IPC11[17:16]	Yes
PortK Input Change Interrupt	_CHANGE_NOTICE_K_VECTOR	47	OFF047[17:1]	IFS1[15]	IEC1[15]	IPC11[28:26]	IPC11[25:24]	Yes
SPI 2 Fault	_SPI2_FAULT_VECTOR	53	OFF053[17:1]	IFS1[21]	IEC1[21]	IPC13[12:10]	IPC13[9:8]	Yes
SPI 2 Receive Done	_SPI2_RX_VECTOR	54	OFF054[17:1]	IFS1[22]	IEC1[22]	IPC13[20:18]	IPC13[17:16]	Yes
SPI 2 Transfer Done	_SPI2_TX_VECTOR	55	OFF055[17:1]	IFS1[23]	IEC1[23]	IPC13[28:26]	IPC13[25:24]	Yes
UART 2 Error	_UART2_FAULT_VECTOR	56	OFF056[17:1]	IFS1[24]	IEC1[24]	IPC14[4:2]	IPC14[1:0]	Yes
UART 2 Receiver	_UART2_RX_VECTOR	57	OFF057[17:1]	IFS1[25]	IEC1[25]	IPC14[12:10]	IPC14[9:8]	No
UART 2 Transmitter	_UART2_TX_VECTOR	58	OFF058[17:1]	IFS1[26]	IEC1[26]	IPC14[20:18]	IPC14[17:16]	No
I2C 2 Bus Collision Event	_I2C2_BUS_VECTOR	59	OFF059[17:1]	IFS1[27]	IEC1[27]	IPC14[28:26]	IPC14[25:24]	Yes
I2C 2 Slave Event	_I2C2_SLAVE_VECTOR	60	OFF060[17:1]	IFS1[28]	IEC1[28]	IPC15[4:2]	IPC15[1:0]	Yes
I2C 2 Master Event	_I2C2_MASTER_VECTOR	61	OFF061[17:1]	IFS1[29]	IEC1[29]	IPC15[12:10]	IPC15[9:8]	Yes
UART 3 Error	_UART3_FAULT_VECTOR	62	OFF062[17:1]	IFS1[30]	IEC1[30]	IPC15[20:18]	IPC15[17:16]	Yes
UART 3 Receiver	_UART3_RX_VECTOR	63	OFF063[17:1]	IFS1[31]	IEC1[31]	IPC15[28:26]	IPC15[25:24]	No
UART 3 Transmitter	_UART3_TX_VECTOR	64	OFF064[17:1]	IFS2[0]	IEC2[0]	IPC16[4:2]	IPC16[1:0]	No
DMA Channel 0	_DMA0_VECTOR	68	OFF068[17:1]	IFS2[4]	IEC2[4]	IPC17[4:2]	IPC17[1:0]	No
DMA Channel 1	_DMA1_VECTOR	69	OFF069[17:1]	IFS2[5]	IEC2[5]	IPC17[12:10]	IPC17[9:8]	No
DMA Channel 2	_DMA2_VECTOR	70	OFF070[17:1]	IFS2[6]	IEC2[6]	IPC17[20:18]	IPC17[17:16]	No

© 2020 Microchip Technology Inc.

TABLE 8-2: INTERRUPT IRQ, VECTOR, AND BIT LOCATION (CONTINUED)

Interrupt Source(1)	XC32 Vector Name	IRQ #	Vector #	Interrupt Bit Location				Persistent Interrupt
				Flag	Enable	Priority	Sub-priority	
DMA Channel 3	_DMA3_VECTOR	71	OFF071[17:1]	IFS2[7]	IEC2[7]	IPC17[28:26]	IPC17[25:24]	No
DMA Channel 4	_DMA4_VECTOR	72	OFF072[17:1]	IFS2[8]	IEC2[8]	IPC18[4:2]	IPC18[1:0]	No
DMA Channel 5	_DMA5_VECTOR	73	OFF073[17:1]	IFS2[9]	IEC2[9]	IPC18[12:10]	IPC18[9:8]	No
DMA Channel 6	_DMA6_VECTOR	74	OFF074[17:1]	IFS2[10]	IEC2[10]	IPC18[20:18]	IPC18[17:16]	No
DMA Channel 7	_DMA7_VECTOR	75	OFF075[17:1]	IFS2[11]	IEC2[11]	IPC18[28:26]	IPC18[25:24]	No
Timer 6	_TIMER_6_VECTOR	76	OFF076[17:1]	IFS2[12]	IEC2[12]	IPC19[4:2]	IPC19[1:0]	No
Timer 7	_TIMER_7_VECTOR	80	OFF080[17:1]	IFS2[16]	IEC2[16]	IPC20[4:2]	IPC20[1:0]	No
Wi-Fi® SMC Event	_RFSMC_VECTOR	83	OFF083[17:1]	IFS2[19]	IEC2[19]	IPC20[28:26]	IPC20[25:24]	Yes
Wi-Fi® MAC Event	_RFMAC_VECTOR	84	OFF084[17:1]	IFS2[20]	IEC2[20]	IPC21[4:2]	IPC21[1:0]	Yes
Cycle Time Register Event	_CTR1_EVENT_VECTOR	85	OFF085[17:1]	IFS2[21]	IEC2[21]	IPC21[12:10]	IPC21[9:8]	No
Wi-Fi® Timer 0 Event	_RFTM0_VECTOR	86	OFF086[17:1]	IFS2[22]	IEC2[22]	IPC21[20:18]	IPC21[17:16]	Yes
Wi-Fi® Timer 1 Event	_RFTM1_VECTOR	87	OFF087[17:1]	IFS2[23]	IEC2[23]	IPC21[28:26]	IPC21[25:24]	Yes
Wi-Fi® Timer 2 Event	_RFTM2_VECTOR	88	OFF088[17:1]	IFS2[24]	IEC2[24]	IPC22[4:2]	IPC22[1:0]	Yes
Wi-Fi® Timer 3 Event	_RFTM3_VECTOR	89	OFF089[17:1]	IFS2[25]	IEC2[25]	IPC22[12:10]	IPC22[9:8]	Yes
Cycle Time Reg Trig. Out Ev.	_CTR1_TRG_VECTOR	90	OFF090[17:1]	IFS2[26]	IEC2[26]	IPC22[20:18]	IPC22[17:16]	No
Wi-Fi® WCOE Event	_RFWCOE_VECTOR	91	OFF091[17:1]	IFS2[27]	IEC2[27]	IPC22[28:26]	IPC22[25:24]	Yes
ADC global	_ADC_VECTOR	92	OFF092[17:1]	IFS2[28]	IEC2[28]	IPC23[4:2]	IPC23[1:0]	No
ADC Digital Comparator 1	_ADC_DC1_VECTOR	94	OFF094[17:1]	IFS2[30]	IEC2[30]	IPC23[20:18]	IPC23[17:16]	No
ADC Digital Comparator 2	_ADC_DC2_VECTOR	95	OFF095[17:1]	IFS2[31]	IEC2[31]	IPC23[28:26]	IPC23[25:24]	No
ADC Digital Filter 1	_ADC_DF1_VECTOR	96	OFF096[17:1]	IFS3[0]	IEC3[0]	IPC24[4:2]	IPC24[1:0]	No
ADC Digital Filter 2	_ADC_DF2_VECTOR	97	OFF097[17:1]	IFS3[1]	IEC3[1]	IPC24[12:10]	IPC24[9:8]	No
ADC Fault Interrupt	_ADC_FAULT_VECTOR	100	OFF100[17:1]	IFS3[4]	IEC3[4]	IPC25[4:2]	IPC25[1:0]	No
ADC EO Scan	_ADC_EOS_VECTOR	101	OFF101[17:1]	IFS3[5]	IEC3[5]	IPC25[12:10]	IPC25[9:8]	No
ADC Analog Ready	_ADC_ARDY_VECTOR	102	OFF102[17:1]	IFS3[6]	IEC3[6]	IPC25[20:18]	IPC25[17:16]	No
ADC Update Ready after Suspend	_ADC_URDY_VECTOR	103	OFF103[17:1]	IFS3[7]	IEC3[7]	IPC25[28:26]	IPC25[25:24]	No
ADC 1st Class Buffer Transfer	_ADC_DMA_VECTOR	104	OFF104[17:1]	IFS3[8]	IEC3[8]	IPC26[4:2]	IPC26[1:0]	No
ADC A Data #0	_ADC_DATA0_VECTOR	106	OFF106[17:1]	IFS3[10]	IEC3[10]	IPC26[20:18]	IPC26[17:16]	No
ADC A Data #1	_ADC_DATA1_VECTOR	107	OFF107[17:1]	IFS3[11]	IEC3[11]	IPC26[28:26]	IPC26[25:24]	No
ADC A Data #2	_ADC_DATA2_VECTOR	108	OFF108[17:1]	IFS3[12]	IEC3[12]	IPC27[4:2]	IPC27[1:0]	No
ADC A Data #3	_ADC_DATA3_VECTOR	109	OFF109[17:1]	IFS3[13]	IEC3[13]	IPC27[12:10]	IPC27[9:8]	No
ADC A Data #4	_ADC_DATA4_VECTOR	110	OFF110[17:1]	IFS3[14]	IEC3[14]	IPC27[20:18]	IPC27[17:16]	No
ADC A Data #5	_ADC_DATA5_VECTOR	111	OFF111[17:1]	IFS3[15]	IEC3[15]	IPC27[28:26]	IPC27[25:24]	No

© 2020 Microchip Technology Inc.

TABLE 8-2: INTERRUPT IRQ, VECTOR, AND BIT LOCATION (CONTINUED)

Interrupt Source(1)	XC32 Vector Name	IRQ #	Vector #	Interrupt Bit Location				Persistent Interrupt
				Flag	Enable	Priority	Sub-priority	
ADC A Data #6	_ADC_DATA6_VECTOR	112	OFF112[17:1]	IFS3[16]	IEC3[16]	IPC28[4:2]	IPC28[1:0]	No
ADC A Data #7	_ADC_DATA7_VECTOR	113	OFF113[17:1]	IFS3[17]	IEC3[17]	IPC28[12:10]	IPC28[9:8]	No
ADC A Data #8	_ADC_DATA8_VECTOR	114	OFF114[17:1]	IFS3[18]	IEC3[18]	IPC28[20:18]	IPC28[17:16]	No
ADC A Data #9	_ADC_DATA9_VECTOR	115	OFF115[17:1]	IFS3[19]	IEC3[19]	IPC28[28:26]	IPC28[25:24]	No
ADC A Data #10	_ADC_DATA10_VECTOR	116	OFF116[17:1]	IFS3[20]	IEC3[20]	IPC29[4:2]	IPC29[1:0]	No
ADC A Data #11	_ADC_DATA11_VECTOR	117	OFF117[17:1]	IFS3[21]	IEC3[21]	IPC29[12:10]	IPC29[9:8]	No
ADC A Data #12	_ADC_DATA12_VECTOR	118	OFF118[17:1]	IFS3[22]	IEC3[22]	IPC29[20:18]	IPC29[17:16]	No
ADC A Data #13	_ADC_DATA13_VECTOR	119	OFF119[17:1]	IFS3[23]	IEC3[23]	IPC29[28:26]	IPC29[25:24]	No
ADC A Data #14	_ADC_DATA14_VECTOR	120	OFF120[17:1]	IFS3[24]	IEC3[24]	IPC30[4:2]	IPC30[1:0]	No
ADC A Data #15	_ADC_DATA15_VECTOR	121	OFF121[17:1]	IFS3[25]	IEC3[25]	IPC30[12:10]	IPC30[9:8]	No
ADC A Data #16	_ADC_DATA16_VECTOR	122	OFF122[17:1]	IFS3[26]	IEC3[26]	IPC30[20:18]	IPC30[17:16]	No
ADC A Data #17	_ADC_DATA17_VECTOR	123	OFF123[17:1]	IFS3[27]	IEC3[27]	IPC30[28:26]	IPC30[25:24]	No
ADC A Data #18	_ADC_DATA18_VECTOR	124	OFF124[17:1]	IFS3[28]	IEC3[28]	IPC31[4:2]	IPC31[1:0]	No
ADC A Data #19	_ADC_DATA19_VECTOR	125	OFF125[17:1]	IFS3[29]	IEC3[29]	IPC31[12:10]	IPC31[9:8]	No
ADC A Data #20	_ADC_DATA20_VECTOR	126	OFF126[17:1]	IFS3[30]	IEC3[30]	IPC31[20:18]	IPC31[17:16]	No
ADC A Data #21	_ADC_DATA21_VECTOR	127	OFF127[17:1]	IFS3[31]	IEC3[31]	IPC31[28:26]	IPC31[25:24]	No
ADC A Data #22	_ADC_DATA22_VECTOR	128	OFF128[17:1]	IFS4[0]	IEC4[0]	IPC32[4:2]	IPC32[1:0]	No
ADC A Data #23	_ADC_DATA23_VECTOR	129	OFF129[17:1]	IFS4[1]	IEC4[1]	IPC32[12:10]	IPC32[9:8]	No
CAN Combined Interrupt	_CAN1_VECTOR	142	OFF142[17:1]	IFS4[14]	IEC4[14]	IPC35[20:18]	IPC35[17:16]	Yes
CAN Combined Interrupt	_CAN2_RX_VECTOR	143	OFF143[17:1]	IFS4[15]	IEC4[15]	IPC35[28:26]	IPC35[25:24]	Yes
CAN Combined Interrupt	_CAN2_TX_VECTOR	144	OFF144[17:1]	IFS4[16]	IEC4[16]	IPC36[4:2]	IPC36[1:0]	Yes
CAN Combined Interrupt	_CAN2_MISC_VECTOR	145	OFF145[17:1]	IFS4[17]	IEC4[17]	IPC36[12:10]	IPC36[9:8]	Yes
SQI Event Completion	_SQI1_VECTOR	150	OFF150[17:1]	IFS4[22]	IEC4[22]	IPC37[20:18]	IPC37[17:16]	Yes
PTG Step Complete	_PTG0_STEP_VECTOR	152	OFF152[17:1]	IFS4[24]	IEC4[24]	IPC38[4:2]	IPC38[1:0]	No
PTG Watchdog Timeout	_PTG0_WDT_VECTOR	153	OFF153[17:1]	IFS4[25]	IEC4[25]	IPC38[12:10]	IPC38[9:8]	No
PTG Int. Trigger 0	_PTG0_TRG0_VECTOR	154	OFF154[17:1]	IFS4[26]	IEC4[26]	IPC38[20:18]	IPC38[17:16]	No
PTG Int. Trigger 1	_PTG0_TRG1_VECTOR	155	OFF155[17:1]	IFS4[27]	IEC4[27]	IPC38[28:26]	IPC38[25:24]	No
PTG Int. Trigger 2	_PTG0_TRG2_VECTOR	156	OFF156[17:1]	IFS4[28]	IEC4[28]	IPC39[4:2]	IPC39[1:0]	No
PTG Int. Trigger 3	_PTG0_TRG3_VECTOR	157	OFF157[17:1]	IFS4[29]	IEC4[29]	IPC39[12:10]	IPC39[9:8]	No
Core perform. counter event	_CORE_PERF_COUNT_VECTOR	162	OFF162[17:1]	IFS5[2]	IEC5[2]	IPC40[20:18]	IPC40[17:16]	Yes
Fast Debug Channel Event	_CORE_FAST_DEBUG_CHAN_VECTOR	163	OFF163[17:1]	IFS5[3]	IEC5[3]	IPC40[28:26]	IPC40[25:24]	Yes
Crypt Engine 1 Event	_CRYPTO_VECTOR	164	OFF164[17:1]	IFS5[4]	IEC5[4]	IPC41[4:2]	IPC41[1:0]	Yes

© 2020 Microchip Technology Inc.

TABLE 8-2: INTERRUPT IRQ, VECTOR, AND BIT LOCATION (CONTINUED)

Interrupt Source(1)	XC32 Vector Name	IRQ #	Vector #	Interrupt Bit Location				Persistent Interrupt
				Flag	Enable	Priority	Sub-priority	
Ethernet network event	_ETHERNET_VECTOR	165	OFF165[17:1]	IFS5[5]	IEC5[5]	IPC41[12:10]	IPC41[9:8]	Yes
IRQEnd	_CRYPTO1_VECTOR	166	OFF166[17:1]	IFS5[6]	IEC5[6]	IPC41[20:18]	IPC41[17:16]	Yes
IRQErr	_CRYPTO1_FAULT_VECTOR	167	OFF167[17:1]	IFS5[7]	IEC5[7]	IPC41[28:26]	IPC41[25:24]	Yes
CVD Event Interrupt	_CVD_EVENT_VECTOR	168	OFF168[17:1]	IFS5[8]	IEC5[8]	IPC42[4:2]	IPC42[1:0]	No
Lowest Natural Order Priority								

© 2020 Microchip Technology Inc.

8.3 Interrupt Control Registers

TABLE 8-3: INTERRUPT REGISTER MAP

Virtual Address (BF81_#)	Register Name(1)	Bit Range	Bits																All Resets
			31/15	30/14	29/13	28/12	27/11	26/10	25/9	24/8	23/7	22/6	21/5	20/4	19/3	18/2	17/1	16/0	
0000	INTCON	31:16	NMIKEY[7:0]								—	—	—	—	—	—	—	—	0000
		15:0	—	—	—	MVEC	—	TPC[2:0]			—	—	—	INT4EP	INT3EP	INT2EP	INT1EP	INT0EP	0000
0010	PRISS	31:16	PRI7SS[3:0]				PRI6SS[3:0]				PRI5SS[3:0]				PRI4SS[3:0]				0000
		15:0	PRI3SS[3:0]				PRI2SS[3:0]				PRI1SS[3:0]				—	—	—	SS0	0000
0020	INTSTAT	31:16	—	—	—	—	—	—	—	—	—	—	—	—	—	—	—	—	0000
		15:0	—	—	—	—	—	SRIPL[2:0]			SIRQ[7:0]								0000
0030	IPTMR	31:16	IPTMR[31:16]																0000
		15:0	IPTMR[15:0]																0000
0040	IFS0	31:16	PREIF	FCEIF	—	—	—	—	—	T5IF	INT4IF	OC4IF	IC4IF	IC4EIF	T4IF	INT3IF	OC3IF	IC3IF	0000
		15:0	IC3EIF	T3IF	INT2IF	OC2IF	IC2IF	IC2EIF	T2IF	INT1IF	OC1IF	IC1IF	IC1EIF	T1IF	INT0IF	CS1IF	CS0IF	CTIF	0000
0050	IFS1	31:16	U3RXIF	U3EIF	I2C2MIF	I2C2SIF	I2C2BIF	U2TXIF	U2RXIF	U2EIF	SPI2TXIF	SPI2RXIF	SPI2EIF	—	—	—	—	—	0000
		15:0	CNKIF	CNCIF	CNBIF	CNAIF	I2C1MIF	I2C1SIF	I2C1BIF	U1TXIF	U1RXIF	U1EIF	SPI1TXIF	SPI1RXIF	SPI1EIF	USBIF	RTCCIF	PFWCRCIF	0000
0060	IFS2	31:16	ADCDC2IF	ADCDC1IF	—	ADCIF	RFWCOEIF	CTR1TRGIF	RFTM3IF	RFTM2IF	RFTM1IF	RFTM0IF	CTR1EVIF	RFMACIF	RFSMCIF	—	—	T7IF	0000
		15:0	—	—	—	T6IF	DMA7IF	DMA6IF	DMA5IF	DMA4IF	DMA3IF	DMA2IF	DMA1IF	DMA0IF	—	—	—	U3TXIF	0000
0070	IFS3	31:16	ADCD21IF	ADCD20IF	ADCD19IF	ADCD18IF	ADCD17IF	ADCD16IF	ADCD15IF	ADCD14IF	ADCD13IF	ADCD12IF	ADCD11IF	ADCD10IF	ADCD9IF	ADCD8IF	ADCD7IF	ADCD6IF	0000
		15:0	ADCD5IF	ADCD4IF	ADCD3IF	ADCD2IF	ADCD1IF	ADCD0IF	—	ADCFCBTIF	ADCURDYIF	ADCARDYIF	ADCEOSIF	ADCFLTIF	—	—	ADCDF2IF	ADCDF1IF	0000
0080	IFS4	31:16	—	—	PTG0TR3IF	PTG0TR2IF	PTG0TR1IF	PTG0TR0IF	PTGWDTIF	PTGSTEPIF	—	SQIIF	—	—	—	—	CAN2IF	CAN2TXIF	0000
		15:0	CAN2RXIF	CAN1IF	—	—	—	—	—	—	—	—	—	—	—	—	ADCD23IF	ADCD22IF	0000
0090	IFS5	31:16	—	—	—	—	—	—	—	—	—	—	—	—	—	—	—	—	0000
		15:0	—	—	—	—	—	—	—	—	CRPT1EIF	CRPT1IF	ETHIF	CRPTIF	FDCIF	MPUPCIF	—	—	0000
00C0	IEC0	31:16	PREIE	FCEIE	—	—	—	—	—	T5IE	INT4IE	OC4IE	IC4IE	IC4EIE	T4IE	INT3IE	OC3IE	IC3IE	0000
		15:0	IC3EIE	T3IE	INT2IE	OC2IE	IC2IE	IC2EIE	T2IE	INT1IE	OC1IE	IC1IE	IC1EIE	T1IE	INT0IE	CS1IE	CS0IE	CTIE	0000
00D0	IEC1	31:16	U3RXIE	U3EIE	I2C2MIE	I2C2SIE	I2C2BIE	U2TXIE	U2RXIE	U2EIE	SPI2TXIE	SPI2RXIE	SPI2EIE	—	—	—	—	—	0000
		15:0	CNKIE	CNCIE	CNBIE	CNAIE	I2C1MIE	I2C1SIE	I2C1BIE	U1TXIE	U1RXIE	U1EIE	SPI1TXIE	SPI1RXIE	SPI1EIE	USBIE	RTCCIE	PFWCRCIE	0000
00E0	IEC2	31:16	ADCDC2IE	ADCDC1IE	—	ADCIE	RFWCOEIE	CTRTRGIE	RFTM3IE	RFTM2IE	RFTM1IE	RFTM0IE	CTREVIE	RFMACIE	RFSMCIE	—	—	T7IE	0000
		15:0	—	—	—	T6IE	DMA7IE	DMA6IE	DMA5IE	DMA4IE	DMA3IE	DMA2IE	DMA1IE	DMA0IE	—	—	—	U3TXIE	0000
00F0	IEC3	31:16	ADCD21IE	ADCD20IE	ADCD19IE	ADCD18IE	ADCD17IE	ADCD16IE	ADCD15IE	ADCD14IE	ADCD13IE	ADCD12IE	ADCD11IE	ADCD10IE	ADCD9IE	ADCD8IE	ADCD7IE	ADCD6IE	0000
		15:0	ADCD5IE	ADCD4IE	ADCD3IE	ADCD2IE	ADCD1IE	ADCD0IE	—	ADCFCBTIE	ADCURDYIE	ADCARDYIE	ADCEOSIE	ADCFLTIE	—	—	ADCDF2IE	ADCDF1IE	0000
0100	IEC4	31:16	—	—	PTG0TR3IE	PTG0TR2IE	PTG0TR1IE	PTG0TR0IE	PTGWDTIE	PTGSTEPIE	—	SQIIE	—	—	—	—	CAN2IE	CAN2TXIE	0000
		15:0	CAN2RXIE	CAN1IE	—	—	—	—	—	—	—	—	—	—	—	—	ADCD23IE	ADCD22IE	0000
0110	IEC5	31:16	—	—	—	—	—	—	—	—	—	—	—	—	—	—	—	—	0000
		15:0	—	—	—	—	—	—	—	—	CRPT1EIE	CRPT1IE	ETHIE	CRPTIE	FDCIE	MPUPCIE	—	—	0000

Legend: x = unknown value on Reset; — = unimplemented, read as '0'. Reset values are shown in hexadecimal.

Note 1: All registers in this table with the exception of the OFFx registers, have corresponding CLR, SET, and INV registers at their virtual addresses, plus offsets of 0x4, 0x8 and 0xC, respectively. See **Section 13.3 "CLR, SET, and INV Registers"** for more information.

2: This bit or register is not available on devices without a CAN module.

3: This bit or register is not available on devices without a Crypto module.

© 2020 Microchip Technology Inc.

TABLE 8-3: INTERRUPT REGISTER MAP (CONTINUED)

Virtual Address (BF81_#)	Register Name(1)	Bit Range	Bits																All Resets
			31/15	30/14	29/13	28/12	27/11	26/10	25/9	24/8	23/7	22/6	21/5	20/4	19/3	18/2	17/1	16/0	
0140	IPC0	31:16	—	—	—	INT0IP[2:0]			INT0IS[1:0]		—	—	—	CS1IP[2:0]			CS1IS[1:0]		0000
		15:0	—	—	—	CS0IP[2:0]			CS0IS[1:0]		—	—	—	CTIP[2:0]			CTIS[1:0]		0000
0150	IPC1	31:16	—	—	—	OC1IP[2:0]			OC1IS[1:0]		—	—	—	IC1IP[2:0]			IC1IS[1:0]		0000
		15:0	—	—	—	IC1EIP[2:0]			IC1EIS[1:0]		—	—	—	T1IP[2:0]			T1IS[1:0]		0000
0160	IPC2	31:16	—	—	—	IC2IP[2:0]			IC2IS[1:0]		—	—	—	IC2EIP[2:0]			IC2EIS[1:0]		0000
		15:0	—	—	—	T2IP[2:0]			T2IS[1:0]		—	—	—	INT1IP[2:0]			INT1IS[1:0]		0000
0170	IPC3	31:16	—	—	—	IC3EIP[2:0]			IC3EIS[1:0]		—	—	—	T3IP[2:0]			T3IS[1:0]		0000
		15:0	—	—	—	INT2IP[2:0]			INT2IS[1:0]		—	—	—	OC2IP[2:0]			OC2IS[1:0]		0000
0180	IPC4	31:16	—	—	—	T4IP[2:0]			T4IS[1:0]		—	—	—	INT3IP[2:0]			INT3IS[1:0]		0000
		15:0	—	—	—	OC3IP[2:0]			OC3IS[1:0]		—	—	—	IC3IP[2:0]			IC3IS[1:0]		0000
0190	IPC5	31:16	—	—	—	INT4IP[2:0]			INT4IS[1:0]		—	—	—	OC4IP[2:0]			OC4IS[1:0]		0000
		15:0	—	—	—	IC4IP[2:0]			IC4IS[1:0]		—	—	—	IC4EIP[2:0]			IC4EIS[1:0]		0000
01A0	IPC6	31:16	—	—	—	—			—		—	—	—	—			—		0000
		15:0	—	—	—	—			—		—	—	—	T5IP[2:0]			T5IS[1:0]		0000
01B0	IPC7	31:16	—	—	—	PREIP[2:0]			PREIS[1:0]		—	—	—	FCEIP[2:0]			FCEIS[1:0]		0000
		15:0	—	—	—	—			—		—	—	—	—			—		0000
01C0	IPC8	31:16	—	—	—	SPI1EIP[2:0]			SPI1EIS[1:0]		—	—	—	USBIP[2:0]			USBIS[1:0]		0000
		15:0	—	—	—	RTCCIP[2:0]			RTCCIS[1:0]		—	—	—	PFWCRCIP[2:0]			PFWCRCIS[1:0]		0000
01D0	IPC9	31:16	—	—	—	U1RXIP[2:0]			U1RXIS[1:0]		—	—	—	U1EIP[2:0]			U1EIS[1:0]		0000
		15:0	—	—	—	SPI1TXIP[2:0]			SPI1TXIS[1:0]		—	—	—	SPI1RXIP[2:0]			SPI1RXIS[1:0]		0000
01E0	IPC10	31:16	—	—	—	I2C1MIP[2:0]			I2C1MIS[1:0]		—	—	—	I2C1SIP[2:0]			I2C1SIS[1:0]		0000
		15:0	—	—	—	I2C1BIP[2:0]			I2C1BIS[1:0]		—	—	—	U1TXIP[2:0]			U1TXIS[1:0]		0000
01F0	IPC11	31:16	—	—	—	CNKIP[2:0]			CNKIS[1:0]		—	—	—	CNCIP[2:0]			CNCIS[1:0]		0000
		15:0	—	—	—	CNBIP[2:0]			CNBIS[1:0]		—	—	—	CNAIP[2:0]			CNAIS[1:0]		0000
0210	IPC13	31:16	—	—	—	SPI2TXIP[2:0]			SPI2TXIS[1:0]		—	—	—	SPI2RXIP[2:0]			SPI2RXIS[1:0]		0000
		15:0	—	—	—	SPI2EIP[2:0]			SPI2EIS[1:0]		—	—	—	—	—	—	—	—	0000
0220	IPC14	31:16	—	—	—	I2C2BIP[2:0]			I2C2BIS[1:0]		—	—	—	U2TXIP[2:0]			U2TXIS[1:0]		0000
		15:0	—	—	—	U2RXIP[2:0]			U2RXIS[1:0]		—	—	—	U2EIP[2:0]			U2EIS[1:0]		0000
0230	IPC15	31:16	—	—	—	U3RXIP[2:0]			U3RXIS[1:0]		—	—	—	U3EIP[2:0]			U3EIS[1:0]		0000
		15:0	—	—	—	I2C2MIP[2:0]			I2C2MIS[1:0]		—	—	—	I2C2SIP[2:0]			I2C2SIS[1:0]		0000
0240	IPC16	31:16	—	—	—	—	—	—	—	—	—	—	—	—	—	—	—	—	0000
		15:0	—	—	—	—	—	—	—	—	—	—	—	U3TXIP[2:0]			U3TXIS[1:0]		0000

Legend: x = unknown value on Reset; — = unimplemented, read as '0'. Reset values are shown in hexadecimal.

Note 1: All registers in this table with the exception of the OFFx registers, have corresponding CLR, SET, and INV registers at their virtual addresses, plus offsets of 0x4, 0x8 and 0xC, respectively. See **Section 13.3 "CLR, SET, and INV Registers"** for more information.

2: This bit or register is not available on devices without a CAN module.

3: This bit or register is not available on devices without a Crypto module.

© 2020 Microchip Technology Inc.

TABLE 8-3: INTERRUPT REGISTER MAP (CONTINUED)

Virtual Address (BF81_#)	Register Name(1)	Bit Range	Bits																All Resets
			31/15	30/14	29/13	28/12	27/11	26/10	25/9	24/8	23/7	22/6	21/5	20/4	19/3	18/2	17/1	16/0	
0250	IPC17	31:16	—	—	—	DMA3IP[2:0]			DMA3IS[1:0]		—	—	—	DMA2IP[2:0]			DMA2IS[1:0]		0000
		15:0	—	—	—	DMA1IP[2:0]			DMA1IS[1:0]		—	—	—	DMA0IP[2:0]			DMA0IS[1:0]		0000
0260	IPC18	31:16	—	—	—	DMA7IP[2:0]			DMA7IS[1:0]		—	—	—	DMA6IP[2:0]			DMA6IS[1:0]		0000
		15:0	—	—	—	DMA5IP[2:0]			DMA5IS[1:0]		—	—	—	DMA4IP[2:0]			DMA4IS[1:0]		0000
0270	IPC19	31:16	—	—	—	—	—	—	—	—	—	—	—	—	—	—	—	—	0000
		15:0	—	—	—	—	—	—	—	—	—	—	—	T6IP[2:0]			T6IS[1:0]		0000
0280	IPC20	31:16	—	—	—	RFSMCIP[2:0]			RFSMCIS[1:0]		—	—	—	—	—	—	—	—	0000
		15:0	—	—	—	—	—	—	—	—	—	—	—	T7IP[2:0]			T7IS[1:0]		0000
0290	IPC21	31:16	—	—	—	RFTM1IP[2:0]			RFTM1IS[1:0]		—	—	—	RFTM0IP[2:0]			RFTM0IS[1:0]		0000
		15:0	—	—	—	CTREVIP[2:0]			CTREVIS[1:0]		—	—	—	RFMACIP[2:0]			RFMACIS[1:0]		0000
02A0	IPC22	31:16	—	—	—	RFWCOEIP[2:0]			RFWCOEIS[1:0]		—	—	—	CTRTRGIP[2:0]			CTRTRGIS[1:0]		0000
		15:0	—	—	—	RFTM3IP[2:0]			RFTM3IS[1:0]		—	—	—	RFTM2IP[2:0]			RFTM2IS[1:0]		0000
02B0	IPC23	31:16	—	—	—	AD1DC2IP[2:0]			AD1DC2IS[1:0]		—	—	—	AD1DC1IP[2:0]			AD1DC1IS[1:0]		0000
		15:0	—	—	—	—	—	—	—	—	—	—	—	AD1IP[2:0]			AD1IS[1:0]		0000
02C0	IPC24	31:16	—	—	—	—	—	—	—	—	—	—	—	—	—	—	—	—	0000
		15:0	—	—	—	AD1DF2IP[2:0]			AD1DF2IS[1:0]		—	—	—	AD1DF1IP[2:0]			AD1DF1IS[1:0]		0000
02D0	IPC25	31:16	—	—	—	AD1RSIP[2:0]			AD1RSIS[1:0]		—	—	—	AD1ARIP[2:0]			AD1ARIS[1:0]		0000
		15:0	—	—	—	AD1EOSIP[2:0]			AD1EOSIS[1:0]		—	—	—	AD1DFIIP[2:0]			AD1DFIIS[1:0]		0000
02E0	IPC26	31:16	—	—	—	AD1I01IP[2:0]			AD1I01IS[1:0]		—	—	—	AD1I00IP[2:0]			AD1I00IS[1:0]		0000
		15:0	—	—	—	—	—	—	—	—	—	—	—	AD1FCIP[2:0]			AD1FCIS[1:0]		0000
02F0	IPC27	31:16	—	—	—	AD1I05IP[2:0]			AD1I05IS[1:0]		—	—	—	AD1I04IP[2:0]			AD1I04IS[1:0]		0000
		15:0	—	—	—	AD1I03IP[2:0]			AD1I03IS[1:0]		—	—	—	AD1I02IP[2:0]			AD1I02IS[1:0]		0000
0300	IPC28	31:16	—	—	—	AD1I09IP[2:0]			AD1I09IS[1:0]		—	—	—	AD1I08IP[2:0]			AD1I08IS[1:0]		0000
		15:0	—	—	—	AD1I07IP[2:0]			AD1I07IS[1:0]		—	—	—	AD1I06IP[2:0]			AD1I06IS[1:0]		0000
0310	IPC29	31:16	—	—	—	AD1I13IP[2:0]			AD1I13IS[1:0]		—	—	—	AD1I12IP[2:0]			AD1I12IS[1:0]		0000
		15:0	—	—	—	AD1I11IP[2:0]			AD1I11IS[1:0]		—	—	—	AD1I10IP[2:0]			AD1I10IS[1:0]		0000
0320	IPC30	31:16	—	—	—	AD1I17IP[2:0]			AD1I17IS[1:0]		—	—	—	AD1I16IP[2:0]			AD1I16IS[1:0]		0000
		15:0	—	—	—	AD1I15IP[2:0]			AD1I15IS[1:0]		—	—	—	AD1I14IP[2:0]			AD1I14IS[1:0]		0000
0330	IPC31	31:16	—	—	—	AD1I21IP[2:0]			AD1I21IS[1:0]		—	—	—	AD1I20IP[2:0]			AD1I20IS[1:0]		0000
		15:0	—	—	—	AD1I19IP[2:0]			AD1I19IS[1:0]		—	—	—	AD1I18IP[2:0]			AD1I18IS[1:0]		0000
0340	IPC32	31:16	—	—	—	—	—	—	—	—	—	—	—	—	—	—	—	—	0000
		15:0	—	—	—	AD1I23IP[2:0]			AD1I23IS[1:0]		—	—	—	AD1I22IP[2:0]			AD1I22IS[1:0]		0000

Legend: x = unknown value on Reset; — = unimplemented, read as '0'. Reset values are shown in hexadecimal.

Note 1: All registers in this table with the exception of the OFFx registers, have corresponding CLR, SET, and INV registers at their virtual addresses, plus offsets of 0x4, 0x8 and 0xC, respectively. See **Section 13.3 "CLR, SET, and INV Registers"** for more information.

2: This bit or register is not available on devices without a CAN module.

3: This bit or register is not available on devices without a Crypto module.

© 2020 Microchip Technology Inc.

TABLE 8-3: INTERRUPT REGISTER MAP (CONTINUED)

Virtual Address (BF81_#)	Register Name(1)	Bit Range	Bits																All Resets
			31/15	30/14	29/13	28/12	27/11	26/10	25/9	24/8	23/7	22/6	21/5	20/4	19/3	18/2	17/1	16/0	
0370	IPC35	31:16	—	—	—	CAN2RXIP[2:0]			CAN2RXIS[1:0]		—	—	—	CAN1IP[2:0]			CAN1IS[1:0]		0000
		15:0	—	—	—	—	—	—	—	—	—	—	—	—	—	—	—	—	0000
0380	IPC36	31:16	—	—	—	—	—	—	—	—	—	—	—	—	—	—	—	—	0000
		15:0	—	—	—	CAN2IP[2:0]			CAN2IS[1:0]		—	—	—	CAN2TXIP[2:0]			CAN2TXIS[1:0]		0000
0390	IPC37	31:16	—	—	—	—	—	—	—	—	—	—	—	SQIIP[2:0]			SQIIS[1:0]		0000
		15:0	—	—	—	—	—	—	—	—	—	—	—	—	—	—	—	—	0000
03A0	IPC38	31:16	—	—	—	PTGTR1IP[2:0]			PTGTR1IS[1:0]		—	—	—	PTGTR0IP[2:0]			PTGTR0IS[1:0]		0000
		15:0	—	—	—	PTGWDTIP[2:0]			PTGWDTIS[1:0]		—	—	—	PTGSTEPIP[2:0]			PTGSTEPIS[1:0]		0000
03B0	IPC39	31:16	—	—	—	—	—	—	—	—	—	—	—	—	—	—	—	—	0000
		15:0	—	—	—	PTGTR3IP[2:0]			PTGTR3IS[1:0]		—	—	—	PTGTR2IP[2:0]			PTGTR2IS[1:0]		0000
03C0	IPC40	31:16	—	—	—	FDCIP[2:0]			FDCIS[1:0]		—	—	—	MPUPCIP[2:0]			MPUPCIS[1:0]		0000
		15:0	—	—	—	—	—	—	—	—	—	—	—	—	—	—	—	—	0000
03D0	IPC41	31:16	—	—	—	CRPT1EIP[2:0]			CRPT1EIS[1:0]		—	—	—	CRPT1IP[2:0]			CRPT1IS[1:0]		0000
		15:0	—	—	—	ETHIP[2:0]			ETHIS[1:0]		—	—	—	CRPTIP[2:0]			CRPTIS[1:0]		0000
03E0	IPC42	31:16	—	—	—	—	—	—	—	—	—	—	—	—	—	—	—	—	0000
		15:0	—	—	—	—	—	—	—	—	—	—	—	CVDIP[2:0]			CVDIS[1:0]		0000
0540	OFF000	31:16	—	—	—	—	—	—	—	—	—	—	—	—	—	—	VOFF[17:16]		0000
		15:0	VOFF[15:1]															—	0000
0544	OFF001	31:16	—	—	—	—	—	—	—	—	—	—	—	—	—	—	VOFF[17:16]		0000
		15:0	VOFF[15:1]															—	0000
0548	OFF002	31:16	—	—	—	—	—	—	—	—	—	—	—	—	—	—	VOFF[17:16]		0000
		15:0	VOFF[15:1]															—	0000
054C	OFF003	31:16	—	—	—	—	—	—	—	—	—	—	—	—	—	—	VOFF[17:16]		0000
		15:0	VOFF[15:1]															—	0000
0550	OFF004	31:16	—	—	—	—	—	—	—	—	—	—	—	—	—	—	VOFF[17:16]		0000
		15:0	VOFF[15:1]															—	0000
0554	OFF005	31:16	—	—	—	—	—	—	—	—	—	—	—	—	—	—	VOFF[17:16]		0000
		15:0	VOFF[15:1]															—	0000
0558	OFF006	31:16	—	—	—	—	—	—	—	—	—	—	—	—	—	—	VOFF[17:16]		0000
		15:0	VOFF[15:1]															—	0000
055C	OFF007	31:16	—	—	—	—	—	—	—	—	—	—	—	—	—	—	VOFF[17:16]		0000
		15:0	VOFF[15:1]															—	0000

Legend: x = unknown value on Reset; — = unimplemented, read as '0'. Reset values are shown in hexadecimal.

Note 1: All registers in this table with the exception of the OFFx registers, have corresponding CLR, SET, and INV registers at their virtual addresses, plus offsets of 0x4, 0x8 and 0xC, respectively. See **Section 13.3 "CLR, SET, and INV Registers"** for more information.

2: This bit or register is not available on devices without a CAN module.

3: This bit or register is not available on devices without a Crypto module.

© 2020 Microchip Technology Inc.

TABLE 8-3: INTERRUPT REGISTER MAP (CONTINUED)

Virtual Address (BF81_#)	Register Name(1)	Bit Range	Bits															All Resets
			31/15	30/14	29/13	28/12	27/11	26/10	25/9	24/8	23/7	22/6	21/5	20/4	19/3	18/2	17/1	16/0	
0560	OFF008	31:16	—	—	—	—	—	—	—	—	—	—	—	—	—	—	VOFF[17:16]		0000
		15:0	VOFF[15:1]															—	0000
0564	OFF009	31:16	—	—	—	—	—	—	—	—	—	—	—	—	—	—	VOFF[17:16]		0000
		15:0	VOFF[15:1]															—	0000
0568	OFF010	31:16	—	—	—	—	—	—	—	—	—	—	—	—	—	—	VOFF[17:16]		0000
		15:0	VOFF[15:1]															—	0000
056C	OFF011	31:16	—	—	—	—	—	—	—	—	—	—	—	—	—	—	VOFF[17:16]		0000
		15:0	VOFF[15:1]															—	0000
0570	OFF012	31:16	—	—	—	—	—	—	—	—	—	—	—	—	—	—	VOFF[17:16]		0000
		15:0	VOFF[15:1]															—	0000
0574	OFF013	31:16	—	—	—	—	—	—	—	—	—	—	—	—	—	—	VOFF[17:16]		0000
		15:0	VOFF[15:1]															—	0000
0578	OFF014	31:16	—	—	—	—	—	—	—	—	—	—	—	—	—	—	VOFF[17:16]		0000
		15:0	VOFF[15:1]															—	0000
057C	OFF015	31:16	—	—	—	—	—	—	—	—	—	—	—	—	—	—	VOFF[17:16]		0000
		15:0	VOFF[15:1]															—	0000
0580	OFF016	31:16	—	—	—	—	—	—	—	—	—	—	—	—	—	—	VOFF[17:16]		0000
		15:0	VOFF[15:1]															—	0000
0584	OFF017	31:16	—	—	—	—	—	—	—	—	—	—	—	—	—	—	VOFF[17:16]		0000
		15:0	VOFF[15:1]															—	0000
0588	OFF018	31:16	—	—	—	—	—	—	—	—	—	—	—	—	—	—	VOFF[17:16]		0000
		15:0	VOFF[15:1]															—	0000
058C	OFF019	31:16	—	—	—	—	—	—	—	—	—	—	—	—	—	—	VOFF[17:16]		0000
		15:0	VOFF[15:1]															—	0000
0590	OFF020	31:16	—	—	—	—	—	—	—	—	—	—	—	—	—	—	VOFF[17:16]		0000
		15:0	VOFF[15:1]															—	0000
0594	OFF021	31:16	—	—	—	—	—	—	—	—	—	—	—	—	—	—	VOFF[17:16]		0000
		15:0	VOFF[15:1]															—	0000
0598	OFF022	31:16	—	—	—	—	—	—	—	—	—	—	—	—	—	—	VOFF[17:16]		0000
		15:0	VOFF[15:1]															—	0000
059C	OFF023	31:16	—	—	—	—	—	—	—	—	—	—	—	—	—	—	VOFF[17:16]		0000
		15:0	VOFF[15:1]															—	0000

Legend: x = unknown value on Reset; — = unimplemented, read as '0'. Reset values are shown in hexadecimal.

Note 1: All registers in this table with the exception of the OFFx registers, have corresponding CLR, SET, and INV registers at their virtual addresses, plus offsets of 0x4, 0x8 and 0xC, respectively. See **Section 13.3 "CLR, SET, and INV Registers"** for more information.

2: This bit or register is not available on devices without a CAN module.

3: This bit or register is not available on devices without a Crypto module.

© 2020 Microchip Technology Inc.

TABLE 8-3: INTERRUPT REGISTER MAP (CONTINUED)

Virtual Address (BF81_#)	Register Name(1)	Bit Range	Bits															All Resets
			31/15	30/14	29/13	28/12	27/11	26/10	25/9	24/8	23/7	22/6	21/5	20/4	19/3	18/2	17/1	16/0	
05A0	OFF024	31:16	—	—	—	—	—	—	—	—	—	—	—	—	—	—	VOFF[17:16]		0000
		15:0	VOFF[15:1]															—	0000
05B8	OFF030	31:16	—	—	—	—	—	—	—	—	—	—	—	—	—	—	VOFF[17:16]		0000
		15:0	VOFF[15:1]															—	0000
05BC	OFF031	31:16	—	—	—	—	—	—	—	—	—	—	—	—	—	—	VOFF[17:16]		0000
		15:0	VOFF[15:1]															—	0000
05C0	OFF032	31:16	—	—	—	—	—	—	—	—	—	—	—	—	—	—	VOFF[17:16]		0000
		15:0	VOFF[15:1]															—	0000
05C4	OFF033	31:16	—	—	—	—	—	—	—	—	—	—	—	—	—	—	VOFF[17:16]		0000
		15:0	VOFF[15:1]															—	0000
05C8	OFF034	31:16	—	—	—	—	—	—	—	—	—	—	—	—	—	—	VOFF[17:16]		0000
		15:0	VOFF[15:1]															—	0000
05CC	OFF035	31:16	—	—	—	—	—	—	—	—	—	—	—	—	—	—	VOFF[17:16]		0000
		15:0	VOFF[15:1]															—	0000
05D0	OFF036	31:16	—	—	—	—	—	—	—	—	—	—	—	—	—	—	VOFF[17:16]		0000
		15:0	VOFF[15:1]															—	0000
05D4	OFF037	31:16	—	—	—	—	—	—	—	—	—	—	—	—	—	—	VOFF[17:16]		0000
		15:0	VOFF[15:1]															—	0000
05D8	OFF038	31:16	—	—	—	—	—	—	—	—	—	—	—	—	—	—	VOFF[17:16]		0000
		15:0	VOFF[15:1]															—	0000
05DC	OFF039	31:16	—	—	—	—	—	—	—	—	—	—	—	—	—	—	VOFF[17:16]		0000
		15:0	VOFF[15:1]															—	0000
05E0	OFF040	31:16	—	—	—	—	—	—	—	—	—	—	—	—	—	—	VOFF[17:16]		0000
		15:0	VOFF[15:1]															—	0000
05E4	OFF041	31:16	—	—	—	—	—	—	—	—	—	—	—	—	—	—	VOFF[17:16]		0000
		15:0	VOFF[15:1]															—	0000
05E8	OFF042	31:16	—	—	—	—	—	—	—	—	—	—	—	—	—	—	VOFF[17:16]		0000
		15:0	VOFF[15:1]															—	0000
05EC	OFF043	31:16	—	—	—	—	—	—	—	—	—	—	—	—	—	—	VOFF[17:16]		0000
		15:0	VOFF[15:1]															—	0000
05F0	OFF044	31:16	—	—	—	—	—	—	—	—	—	—	—	—	—	—	VOFF[17:16]		0000
		15:0	VOFF[15:1]															—	0000
05F4	OFF045	31:16	—	—	—	—	—	—	—	—	—	—	—	—	—	—	VOFF[17:16]		0000
		15:0	VOFF[15:1]															—	0000

Legend: x = unknown value on Reset; — = unimplemented, read as '0'. Reset values are shown in hexadecimal.

Note 1: All registers in this table with the exception of the OFFx registers, have corresponding CLR, SET, and INV registers at their virtual addresses, plus offsets of 0x4, 0x8 and 0xC, respectively. See **Section 13.3 "CLR, SET, and INV Registers"** for more information.

2: This bit or register is not available on devices without a CAN module.

3: This bit or register is not available on devices without a Crypto module.

© 2020 Microchip Technology Inc.

TABLE 8-3: INTERRUPT REGISTER MAP (CONTINUED)

Virtual Address (BF81_#)	Register Name(1)	Bit Range	Bits															All Resets
			31/15	30/14	29/13	28/12	27/11	26/10	25/9	24/8	23/7	22/6	21/5	20/4	19/3	18/2	17/1	16/0	
05F8	OFF046	31:16	—	—	—	—	—	—	—	—	—	—	—	—	—	—	VOFF[17:16]		0000
		15:0	VOFF[15:1]															—	0000
05FC	OFF047	31:16	—	—	—	—	—	—	—	—	—	—	—	—	—	—	VOFF[17:16]		0000
		15:0	VOFF[15:1]															—	0000
0614	OFF053	31:16	—	—	—	—	—	—	—	—	—	—	—	—	—	—	VOFF[17:16]		0000
		15:0	VOFF[15:1]															—	0000
0618	OFF054	31:16	—	—	—	—	—	—	—	—	—	—	—	—	—	—	VOFF[17:16]		0000
		15:0	VOFF[15:1]															—	0000
061C	OFF055	31:16	—	—	—	—	—	—	—	—	—	—	—	—	—	—	VOFF[17:16]		0000
		15:0	VOFF[15:1]															—	0000
0620	OFF056	31:16	—	—	—	—	—	—	—	—	—	—	—	—	—	—	VOFF[17:16]		0000
		15:0	VOFF[15:1]															—	0000
0624	OFF057	31:16	—	—	—	—	—	—	—	—	—	—	—	—	—	—	VOFF[17:16]		0000
		15:0	VOFF[15:1]															—	0000
0628	OFF058	31:16	—	—	—	—	—	—	—	—	—	—	—	—	—	—	VOFF[17:16]		0000
		15:0	VOFF[15:1]															—	0000
062C	OFF059	31:16	—	—	—	—	—	—	—	—	—	—	—	—	—	—	VOFF[17:16]		0000
		15:0	VOFF[15:1]															—	0000
0630	OFF060	31:16	—	—	—	—	—	—	—	—	—	—	—	—	—	—	VOFF[17:16]		0000
		15:0	VOFF[15:1]															—	0000
0634	OFF061	31:16	—	—	—	—	—	—	—	—	—	—	—	—	—	—	VOFF[17:16]		0000
		15:0	VOFF[15:1]															—	0000
0638	OFF062	31:16	—	—	—	—	—	—	—	—	—	—	—	—	—	—	VOFF[17:16]		0000
		15:0	VOFF[15:1]															—	0000
063C	OFF063	31:16	—	—	—	—	—	—	—	—	—	—	—	—	—	—	VOFF[17:16]		0000
		15:0	VOFF[15:1]															—	0000
0640	OFF064	31:16	—	—	—	—	—	—	—	—	—	—	—	—	—	—	VOFF[17:16]		0000
		15:0	VOFF[15:1]															—	0000
0650	OFF068	31:16	—	—	—	—	—	—	—	—	—	—	—	—	—	—	VOFF[17:16]		0000
		15:0	VOFF[15:1]															—	0000
0654	OFF069	31:16	—	—	—	—	—	—	—	—	—	—	—	—	—	—	VOFF[17:16]		0000
		15:0	VOFF[15:1]															—	0000
0658	OFF070	31:16	—	—	—	—	—	—	—	—	—	—	—	—	—	—	VOFF[17:16]		0000
		15:0	VOFF[15:1]															—	0000
065C	OFF071	31:16	—	—	—	—	—	—	—	—	—	—	—	—	—	—	VOFF[17:16]		0000
		15:0	VOFF[15:1]															—	0000

Legend: x = unknown value on Reset; — = unimplemented, read as '0'. Reset values are shown in hexadecimal.

Note 1: All registers in this table with the exception of the OFFx registers, have corresponding CLR, SET, and INV registers at their virtual addresses, plus offsets of 0x4, 0x8 and 0xC, respectively. See **Section 13.3 "CLR, SET, and INV Registers"** for more information.

2: This bit or register is not available on devices without a CAN module.

3: This bit or register is not available on devices without a Crypto module.

© 2020 Microchip Technology Inc.

TABLE 8-3: INTERRUPT REGISTER MAP (CONTINUED)

Virtual Address (BF81_#)	Register Name(1)	Bit Range	Bits															All Resets
			31/15	30/14	29/13	28/12	27/11	26/10	25/9	24/8	23/7	22/6	21/5	20/4	19/3	18/2	17/1	16/0	
0660	OFF072	31:16	—	—	—	—	—	—	—	—	—	—	—	—	—	—	VOFF[17:16]		0000
		15:0	VOFF[15:1]															—	0000
0664	OFF073	31:16	—	—	—	—	—	—	—	—	—	—	—	—	—	—	VOFF[17:16]		0000
		15:0	VOFF[15:1]															—	0000
0668	OFF074	31:16	—	—	—	—	—	—	—	—	—	—	—	—	—	—	VOFF[17:16]		0000
		15:0	VOFF[15:1]															—	0000
066C	OFF075	31:16	—	—	—	—	—	—	—	—	—	—	—	—	—	—	VOFF[17:16]		0000
		15:0	VOFF[15:1]															—	0000
0670	OFF076	31:16	—	—	—	—	—	—	—	—	—	—	—	—	—	—	VOFF[17:16]		0000
		15:0	VOFF[15:1]															—	0000
0680	OFF080	31:16	—	—	—	—	—	—	—	—	—	—	—	—	—	—	VOFF[17:16]		0000
		15:0	VOFF[15:1]															—	0000
068C	OFF083	31:16	—	—	—	—	—	—	—	—	—	—	—	—	—	—	VOFF[17:16]		0000
		15:0	VOFF[15:1]															—	0000
0690	OFF084	31:16	—	—	—	—	—	—	—	—	—	—	—	—	—	—	VOFF[17:16]		0000
		15:0	VOFF[15:1]															—	0000
0694	OFF085	31:16	—	—	—	—	—	—	—	—	—	—	—	—	—	—	VOFF[17:16]		0000
		15:0	VOFF[15:1]															—	0000
0698	OFF086	31:16	—	—	—	—	—	—	—	—	—	—	—	—	—	—	VOFF[17:16]		0000
		15:0	VOFF[15:1]															—	0000
069C	OFF087	31:16	—	—	—	—	—	—	—	—	—	—	—	—	—	—	VOFF[17:16]		0000
		15:0	VOFF[15:1]															—	0000
06A0	OFF088	31:16	—	—	—	—	—	—	—	—	—	—	—	—	—	—	VOFF[17:16]		0000
		15:0	VOFF[15:1]															—	0000
06A4	OFF089	31:16	—	—	—	—	—	—	—	—	—	—	—	—	—	—	VOFF[17:16]		0000
		15:0	VOFF[15:1]															—	0000
06A8	OFF090	31:16	—	—	—	—	—	—	—	—	—	—	—	—	—	—	VOFF[17:16]		0000
		15:0	VOFF[15:1]															—	0000
06AC	OFF091	31:16	—	—	—	—	—	—	—	—	—	—	—	—	—	—	VOFF[17:16]		0000
		15:0	VOFF[15:1]															—	0000
06B0	OFF092	31:16	—	—	—	—	—	—	—	—	—	—	—	—	—	—	VOFF[17:16]		0000
		15:0	VOFF[15:1]															—	0000
06B8	OFF094	31:16	—	—	—	—	—	—	—	—	—	—	—	—	—	—	VOFF[17:16]		0000
		15:0	VOFF[15:1]															—	0000
06BC	OFF095	31:16	—	—	—	—	—	—	—	—	—	—	—	—	—	—	VOFF[17:16]		0000
		15:0	VOFF[15:1]															—	0000

Legend: x = unknown value on Reset; — = unimplemented, read as '0'. Reset values are shown in hexadecimal.

Note 1: All registers in this table with the exception of the OFFx registers, have corresponding CLR, SET, and INV registers at their virtual addresses, plus offsets of 0x4, 0x8 and 0xC, respectively. See **Section 13.3 "CLR, SET, and INV Registers"** for more information.

2: This bit or register is not available on devices without a CAN module.

3: This bit or register is not available on devices without a Crypto module.

© 2020 Microchip Technology Inc.

TABLE 8-3: INTERRUPT REGISTER MAP (CONTINUED)

Virtual Address (BF81_#)	Register Name(1)	Bit Range	Bits															All Resets
			31/15	30/14	29/13	28/12	27/11	26/10	25/9	24/8	23/7	22/6	21/5	20/4	19/3	18/2	17/1	16/0	
06C0	OFF096	31:16	—	—	—	—	—	—	—	—	—	—	—	—	—	—	VOFF[17:16]		0000
		15:0	VOFF[15:1]															—	0000
06C4	OFF097	31:16	—	—	—	—	—	—	—	—	—	—	—	—	—	—	VOFF[17:16]		0000
		15:0	VOFF[15:1]															—	0000
06D0	OFF100	31:16	—	—	—	—	—	—	—	—	—	—	—	—	—	—	VOFF[17:16]		0000
		15:0	VOFF[15:1]															—	0000
06D4	OFF101	31:16	—	—	—	—	—	—	—	—	—	—	—	—	—	—	VOFF[17:16]		0000
		15:0	VOFF[15:1]															—	0000
06D8	OFF102	31:16	—	—	—	—	—	—	—	—	—	—	—	—	—	—	VOFF[17:16]		0000
		15:0	VOFF[15:1]															—	0000
06DC	OFF103	31:16	—	—	—	—	—	—	—	—	—	—	—	—	—	—	VOFF[17:16]		0000
		15:0	VOFF[15:1]															—	0000
06E0	OFF104	31:16	—	—	—	—	—	—	—	—	—	—	—	—	—	—	VOFF[17:16]		0000
		15:0	VOFF[15:1]															—	0000
06E8	OFF106	31:16	—	—	—	—	—	—	—	—	—	—	—	—	—	—	VOFF[17:16]		0000
		15:0	VOFF[15:1]															—	0000
06EC	OFF107	31:16	—	—	—	—	—	—	—	—	—	—	—	—	—	—	VOFF[17:16]		0000
		15:0	VOFF[15:1]															—	0000
06F0	OFF108	31:16	—	—	—	—	—	—	—	—	—	—	—	—	—	—	VOFF[17:16]		0000
		15:0	VOFF[15:1]															—	0000
06F4	OFF109	31:16	—	—	—	—	—	—	—	—	—	—	—	—	—	—	VOFF[17:16]		0000
		15:0	VOFF[15:1]															—	0000
06F8	OFF110	31:16	—	—	—	—	—	—	—	—	—	—	—	—	—	—	VOFF[17:16]		0000
		15:0	VOFF[15:1]															—	0000
06FC	OFF111	31:16	—	—	—	—	—	—	—	—	—	—	—	—	—	—	VOFF[17:16]		0000
		15:0	VOFF[15:1]															—	0000
0700	OFF112	31:16	—	—	—	—	—	—	—	—	—	—	—	—	—	—	VOFF[17:16]		0000
		15:0	VOFF[15:1]															—	0000
0704	OFF113	31:16	—	—	—	—	—	—	—	—	—	—	—	—	—	—	VOFF[17:16]		0000
		15:0	VOFF[15:1]															—	0000
0708	OFF114	31:16	—	—	—	—	—	—	—	—	—	—	—	—	—	—	VOFF[17:16]		0000
		15:0	VOFF[15:1]															—	0000
070C	OFF115	31:16	—	—	—	—	—	—	—	—	—	—	—	—	—	—	VOFF[17:16]		0000
		15:0	VOFF[15:1]															—	0000
0710	OFF116	31:16	—	—	—	—	—	—	—	—	—	—	—	—	—	—	VOFF[17:16]		0000
		15:0	VOFF[15:1]															—	0000

Legend: x = unknown value on Reset; — = unimplemented, read as '0'. Reset values are shown in hexadecimal.

Note 1: All registers in this table with the exception of the OFFx registers, have corresponding CLR, SET, and INV registers at their virtual addresses, plus offsets of 0x4, 0x8 and 0xC, respectively. See **Section 13.3 "CLR, SET, and INV Registers"** for more information.

2: This bit or register is not available on devices without a CAN module.

3: This bit or register is not available on devices without a Crypto module.

© 2020 Microchip Technology Inc.

TABLE 8-3: INTERRUPT REGISTER MAP (CONTINUED)

Virtual Address (BF81_#)	Register Name(1)	Bit Range	Bits															All Resets
			31/15	30/14	29/13	28/12	27/11	26/10	25/9	24/8	23/7	22/6	21/5	20/4	19/3	18/2	17/1	16/0	
0714	OFF117	31:16	—	—	—	—	—	—	—	—	—	—	—	—	—	—	VOFF[17:16]		0000
		15:0	VOFF[15:1]															—	0000
0718	OFF118	31:16	—	—	—	—	—	—	—	—	—	—	—	—	—	—	VOFF[17:16]		0000
		15:0	VOFF[15:1]															—	0000
071C	OFF119	31:16	—	—	—	—	—	—	—	—	—	—	—	—	—	—	VOFF[17:16]		0000
		15:0	VOFF[15:1]															—	0000
0720	OFF120	31:16	—	—	—	—	—	—	—	—	—	—	—	—	—	—	VOFF[17:16]		0000
		15:0	VOFF[15:1]															—	0000
0724	OFF121	31:16	—	—	—	—	—	—	—	—	—	—	—	—	—	—	VOFF[17:16]		0000
		15:0	VOFF[15:1]															—	0000
0728	OFF122	31:16	—	—	—	—	—	—	—	—	—	—	—	—	—	—	VOFF[17:16]		0000
		15:0	VOFF[15:1]															—	0000
072C	OFF123	31:16	—	—	—	—	—	—	—	—	—	—	—	—	—	—	VOFF[17:16]		0000
		15:0	VOFF[15:1]															—	0000
0730	OFF124	31:16	—	—	—	—	—	—	—	—	—	—	—	—	—	—	VOFF[17:16]		0000
		15:0	VOFF[15:1]															—	0000
0734	OFF125	31:16	—	—	—	—	—	—	—	—	—	—	—	—	—	—	VOFF[17:16]		0000
		15:0	VOFF[15:1]															—	0000
0738	OFF126	31:16	—	—	—	—	—	—	—	—	—	—	—	—	—	—	VOFF[17:16]		0000
		15:0	VOFF[15:1]															—	0000
073C	OFF127	31:16	—	—	—	—	—	—	—	—	—	—	—	—	—	—	VOFF[17:16]		0000
		15:0	VOFF[15:1]															—	0000
0740	OFF128	31:16	—	—	—	—	—	—	—	—	—	—	—	—	—	—	VOFF[17:16]		0000
		15:0	VOFF[15:1]															—	0000
0744	OFF129	31:16	—	—	—	—	—	—	—	—	—	—	—	—	—	—	VOFF[17:16]		0000
		15:0	VOFF[15:1]															—	0000
0778	OFF142(2)	31:16	—	—	—	—	—	—	—	—	—	—	—	—	—	—	VOFF[17:16]		0000
		15:0	VOFF[15:1]															—	0000
077C	OFF143(2)	31:16	—	—	—	—	—	—	—	—	—	—	—	—	—	—	VOFF[17:16]		0000
		15:0	VOFF[15:1]															—	0000
0780	OFF144(2)	31:16	—	—	—	—	—	—	—	—	—	—	—	—	—	—	VOFF[17:16]		0000
		15:0	VOFF[15:1]															—	0000
0784	OFF145(2)	31:16	—	—	—	—	—	—	—	—	—	—	—	—	—	—	VOFF[17:16]		0000
		15:0	VOFF[15:1]															—	0000
0798	OFF150	31:16	—	—	—	—	—	—	—	—	—	—	—	—	—	—	VOFF[17:16]		0000
		15:0	VOFF[15:1]															—	0000

Legend: x = unknown value on Reset; — = unimplemented, read as '0'. Reset values are shown in hexadecimal.

Note 1: All registers in this table with the exception of the OFFx registers, have corresponding CLR, SET, and INV registers at their virtual addresses, plus offsets of 0x4, 0x8 and 0xC, respectively. See **Section 13.3 "CLR, SET, and INV Registers"** for more information.

2: This bit or register is not available on devices without a CAN module.

3: This bit or register is not available on devices without a Crypto module.

© 2020 Microchip Technology Inc.

TABLE 8-3: INTERRUPT REGISTER MAP (CONTINUED)

Virtual Address (BF81_#)	Register Name(1)	Bit Range	Bits															All Resets
			31/15	30/14	29/13	28/12	27/11	26/10	25/9	24/8	23/7	22/6	21/5	20/4	19/3	18/2	17/1	16/0	
07A0	OFF152	31:16	—	—	—	—	—	—	—	—	—	—	—	—	—	—	VOFF[17:16]		0000
		15:0	VOFF[15:1]															—	0000
07A4	OFF153	31:16	—	—	—	—	—	—	—	—	—	—	—	—	—	—	VOFF[17:16]		0000
		15:0	VOFF[15:1]															—	0000
07A8	OFF154	31:16	—	—	—	—	—	—	—	—	—	—	—	—	—	—	VOFF[17:16]		0000
		15:0	VOFF[15:1]															—	0000
07AC	OFF155	31:16	—	—	—	—	—	—	—	—	—	—	—	—	—	—	VOFF[17:16]		0000
		15:0	VOFF[15:1]															—	0000
07B0	OFF156	31:16	—	—	—	—	—	—	—	—	—	—	—	—	—	—	VOFF[17:16]		0000
		15:0	VOFF[15:1]															—	0000
07B4	OFF157	31:16	—	—	—	—	—	—	—	—	—	—	—	—	—	—	VOFF[17:16]		0000
		15:0	VOFF[15:1]															—	0000
07C8	OFF162	31:16	—	—	—	—	—	—	—	—	—	—	—	—	—	—	VOFF[17:16]		0000
		15:0	VOFF[15:1]															—	0000
07CC	OFF163	31:16	—	—	—	—	—	—	—	—	—	—	—	—	—	—	VOFF[17:16]		0000
		15:0	VOFF[15:1]															—	0000
07D0	OFF164(3)	31:16	—	—	—	—	—	—	—	—	—	—	—	—	—	—	VOFF[17:16]		0000
		15:0	VOFF[15:1]															—	0000
07D4	OFF165	31:16	—	—	—	—	—	—	—	—	—	—	—	—	—	—	VOFF[17:16]		0000
		15:0	VOFF[15:1]															—	0000
07D8	OFF166(3)	31:16	—	—	—	—	—	—	—	—	—	—	—	—	—	—	VOFF[17:16]		0000
		15:0	VOFF[15:1]															—	0000
07DC	OFF167(3)	31:16	—	—	—	—	—	—	—	—	—	—	—	—	—	—	VOFF[17:16]		0000
		15:0	VOFF[15:1]															—	0000

Legend: x = unknown value on Reset; — = unimplemented, read as '0'. Reset values are shown in hexadecimal.

Note 1: All registers in this table with the exception of the OFFx registers, have corresponding CLR, SET, and INV registers at their virtual addresses, plus offsets of 0x4, 0x8 and 0xC, respectively. See **Section 13.3 "CLR, SET, and INV Registers"** for more information.

2: This bit or register is not available on devices without a CAN module.

3: This bit or register is not available on devices without a Crypto module.

© 2020 Microchip Technology Inc.

REGISTER 8-1: INTCON: INTERRUPT CONTROL REGISTER

Bit Range	Bit 31/23/15/7	Bit 30/22/14/6	Bit 29/21/13/5	Bit 28/20/12/4	Bit 27/19/11/3	Bit 26/18/10/2	Bit 25/17/9/1	Bit 24/16/8/0
31:24	R/W-0	R/W-0	R/W-0	R/W-0	R/W-0	R/W-0	R/W-0	R/W-0
	NMIKEY[7:0]							
23:16	U-0	U-0	U-0	U-0	U-0	U-0	U-0	U-0
	—	—	—	—	—	—	—	—
15:8	U-0	U-0	U-0	R/W-0	U-0	R/W-0	R/W-0	R/W-0
	—	—	—	MVEC	—	TPC[2:0]		
7:0	U-0	U-0	U-0	R/W-0	R/W-0	R/W-0	R/W-0	R/W-0
	—	—	—	INT4EP	INT3EP	INT2EP	INT1EP	INT0EP

Legend:			
R = Readable bit	W = Writable bit	U = Unimplemented bit, read as '0'	
-n = Value at POR	'1' = Bit is set	'0' = Bit is cleared	x = Bit is unknown

bit 31-24 **NMIKEY[7:0]:** Non-maskable Interrupt Key bits
When the correct key (0x4E) is written, a software NMI is generated. The status is indicated by the GNMI bit (RNMICON[19]).

bit 23-13 **Unimplemented:** Read as '0'

bit 12 **MVEC:** Multi-vector Configuration bit
1 = Interrupt Controller configured for Multi-vector mode
0 = Interrupt Controller configured for Single Vector mode

bit 11 **Unimplemented:** Read as '0'

bit 10-8 **TPC[2:0]:** Interrupt Proximity Timer Control bits
111 = Interrupts of group priority 7 or lower start the interrupt proximity timer
110 = Interrupts of group priority 6 or lower start the interrupt proximity timer
101 = Interrupts of group priority 5 or lower start the interrupt proximity timer
100 = Interrupts of group priority 4 or lower start the interrupt proximity timer
011 = Interrupts of group priority 3 or lower start the interrupt proximity timer
010 = Interrupts of group priority 2 or lower start the interrupt proximity timer
001 = Interrupts of group priority 1 start the interrupt proximity timer
000 = Disables interrupt proximity timer

bit 7-5 **Unimplemented:** Read as '0'

bit 4 **INT4EP:** External Interrupt 4 Edge Polarity Control bit
1 = Rising edge
0 = Falling edge

bit 3 **INT3EP:** External Interrupt 3 Edge Polarity Control bit
1 = Rising edge
0 = Falling edge

bit 2 **INT2EP:** External Interrupt 2 Edge Polarity Control bit
1 = Rising edge
0 = Falling edge

bit 1 **INT1EP:** External Interrupt 1 Edge Polarity Control bit
1 = Rising edge
0 = Falling edge

bit 0 **INT0EP:** External Interrupt 0 Edge Polarity Control bit
1 = Rising edge
0 = Falling edge

 © 2020 Microchip Technology Inc.

REGISTER 8-2: PRISS: PRIORITY SHADOW SELECT REGISTER

Bit Range	Bit 31/23/15/7	Bit 30/22/14/6	Bit 29/21/13/5	Bit 28/20/12/4	Bit 27/19/11/3	Bit 26/18/10/2	Bit 25/17/9/1	Bit 24/16/8/0
31:24	R/W-0	R/W-0	R/W-0	R/W-0	R/W-0	R/W-0	R/W-0	R/W-0
	PRI7SS[3:0](1)				PRI6SS[3:0](1)			
23:16	R/W-0	R/W-0	R/W-0	R/W-0	R/W-0	R/W-0	R/W-0	R/W-0
	PRI5SS[3:0](1)				PRI4SS[3:0](1)			
15:8	R/W-0	R/W-0	R/W-0	R/W-0	R/W-0	R/W-0	R/W-0	R/W-0
	PRI3SS[3:0]				PRI2SS[3:0](1)			
7:0	R/W-0	R/W-0	R/W-0	R/W-0	U-0	U-0	U-0	R/W-0
	PRI1SS[3:0](1)				—	—	—	SS0

Legend:			
R = Readable bit	W = Writable bit	U = Unimplemented bit, read as '0'	
-n = Value at POR	'1' = Bit is set	'0' = Bit is cleared	x = Bit is unknown

bit 31-28 **PRI7SS[3:0]:** Interrupt with Priority Level 7 Shadow Set bits(1)
- 1xxx = Reserved (by default, an interrupt with a priority level of 7 uses Shadow Set 0)
- 0111 = Interrupt with a priority level of 7 uses Shadow Set 7
- 0110 = Interrupt with a priority level of 7 uses Shadow Set 6
- •
- •
- •
- 0001 = Interrupt with a priority level of 7 uses Shadow Set 1
- 0000 = Interrupt with a priority level of 7 uses Shadow Set 0

bit 27-24 **PRI6SS[3:0]:** Interrupt with Priority Level 6 Shadow Set bits(1)
- 1xxx = Reserved (by default, an interrupt with a priority level of 6 uses Shadow Set 0)
- 0111 = Interrupt with a priority level of 6 uses Shadow Set 7
- 0110 = Interrupt with a priority level of 6 uses Shadow Set 6
- •
- •
- •
- 0001 = Interrupt with a priority level of 6 uses Shadow Set 1
- 0000 = Interrupt with a priority level of 6 uses Shadow Set 0

bit 23-20 **PRI5SS[3:0]:** Interrupt with Priority Level 5 Shadow Set bits(1)
- 1xxx = Reserved (by default, an interrupt with a priority level of 5 uses Shadow Set 0)
- 0111 = Interrupt with a priority level of 5 uses Shadow Set 7
- 0110 = Interrupt with a priority level of 5 uses Shadow Set 6
- •
- •
- •
- 0001 = Interrupt with a priority level of 5 uses Shadow Set 1
- 0000 = Interrupt with a priority level of 5 uses Shadow Set 0

bit 19-16 **PRI4SS[3:0]:** Interrupt with Priority Level 4 Shadow Set bits(1)
- 1xxx = Reserved (by default, an interrupt with a priority level of 4 uses Shadow Set 0)
- 0111 = Interrupt with a priority level of 4 uses Shadow Set 7
- 0110 = Interrupt with a priority level of 4 uses Shadow Set 6
- •
- •
- •
- 0001 = Interrupt with a priority level of 4 uses Shadow Set 1
- 0000 = Interrupt with a priority level of 4 uses Shadow Set 0

Note 1: These bits are ignored if the MVEC bit (INTCON[12]) = 0.

REGISTER 8-2: PRISS: PRIORITY SHADOW SELECT REGISTER (CONTINUED)

bit 15-12 **PRI3SS[3:0]:** Interrupt with Priority Level 3 Shadow Set bits(1)
1xxx = Reserved (by default, an interrupt with a priority level of 3 uses Shadow Set 0)
0111 = Interrupt with a priority level of 3 uses Shadow Set 7
0110 = Interrupt with a priority level of 3 uses Shadow Set 6
•
•
•
0001 = Interrupt with a priority level of 3 uses Shadow Set 1
0000 = Interrupt with a priority level of 3 uses Shadow Set 0

bit 11-8 **PRI2SS[3:0]:** Interrupt with Priority Level 2 Shadow Set bits(1)
1xxx = Reserved (by default, an interrupt with a priority level of 2 uses Shadow Set 0)
0111 = Interrupt with a priority level of 2 uses Shadow Set 7
0110 = Interrupt with a priority level of 2 uses Shadow Set 6
•
•
•
0001 = Interrupt with a priority level of 2 uses Shadow Set 1
0000 = Interrupt with a priority level of 2 uses Shadow Set 0

bit 7-4 **PRI1SS[3:0]:** Interrupt with Priority Level 1 Shadow Set bits(1)
1xxx = Reserved (by default, an interrupt with a priority level of 1 uses Shadow Set 0)
0111 = Interrupt with a priority level of 1 uses Shadow Set 7
0110 = Interrupt with a priority level of 1 uses Shadow Set 6
•
•
•
0001 = Interrupt with a priority level of 1 uses Shadow Set 1
0000 = Interrupt with a priority level of 1 uses Shadow Set 0

bit 3-1 **Unimplemented:** Read as '0'

bit 0 **SS0:** Single Vector Shadow Register Set bit
1 = Single vector is presented with a shadow set
0 = Single vector is not presented with a shadow set

Note 1: These bits are ignored if the MVEC bit (INTCON[12]) = 0.

 © 2020 Microchip Technology Inc.

REGISTER 8-3: INTSTAT: INTERRUPT STATUS REGISTER

Bit Range	Bit 31/23/15/7	Bit 30/22/14/6	Bit 29/21/13/5	Bit 28/20/12/4	Bit 27/19/11/3	Bit 26/18/10/2	Bit 25/17/9/1	Bit 24/16/8/0
31:24	U-0	U-0	U-0	U-0	U-0	U-0	U-0	U-0
	—	—	—	—	—	—	—	—
23:16	U-0	U-0	U-0	U-0	U-0	U-0	U-0	U-0
	—	—	—	—	—	—	—	—
15:8	U-0	U-0	U-0	U-0	U-0	R-0	R-0	R-0
	—	—	—	—	—	SRIPL[2:0](1)		
7:0	R-0	R-0	R-0	R-0	R-0	R-0	R-0	R-0
	SIRQ[7:0]							

Legend:			
R = Readable bit	W = Writable bit	U = Unimplemented bit, read as '0'	
-n = Value at POR	'1' = Bit is set	'0' = Bit is cleared	x = Bit is unknown

bit 31-11 **Unimplemented:** Read as '0'

bit 10-8 **SRIPL[2:0]:** Requested Priority Level bits for Single Vector mode bits(1)
111-000 = The priority level of the latest interrupt presented to the CPU

bit 7-6 **Unimplemented:** Read as '0'

bit 7-0 **SIRQ[7:0]:** Last Interrupt Request Serviced Status bits
11111111-00000000 = The last interrupt request number serviced by the CPU

Note 1: This value should only be used when the Interrupt Controller is configured for Single Vector mode.

REGISTER 8-4: IPTMR: INTERRUPT PROXIMITY TIMER REGISTER

Bit Range	Bit 31/23/15/7	Bit 30/22/14/6	Bit 29/21/13/5	Bit 28/20/12/4	Bit 27/19/11/3	Bit 26/18/10/2	Bit 25/17/9/1	Bit 24/16/8/0
31:24	R/W-0	R/W-0	R/W-0	R/W-0	R/W-0	R/W-0	R/W-0	R/W-0
	IPTMR[31:24]							
23:16	R/W-0	R/W-0	R/W-0	R/W-0	R/W-0	R/W-0	R/W-0	R/W-0
	IPTMR[23:16]							
15:8	R/W-0	R/W-0	R/W-0	R/W-0	R/W-0	R/W-0	R/W-0	R/W-0
	IPTMR[15:8]							
7:0	R/W-0	R/W-0	R/W-0	R/W-0	R/W-0	R/W-0	R/W-0	R/W-0
	IPTMR[7:0]							

Legend:			
R = Readable bit	W = Writable bit	U = Unimplemented bit, read as '0'	
-n = Value at POR	'1' = Bit is set	'0' = Bit is cleared	x = Bit is unknown

bit 31-0 **IPTMR[31:0]:** Interrupt Proximity Timer Reload bits
Used by the interrupt proximity timer as a reload value when the interrupt proximity timer is triggered by an interrupt event.

REGISTER 8-5: IFSx: INTERRUPT FLAG STATUS REGISTER

Bit Range	Bit 31/23/15/7	Bit 30/22/14/6	Bit 29/21/13/5	Bit 28/20/12/4	Bit 27/19/11/3	Bit 26/18/10/2	Bit 25/17/9/1	Bit 24/16/8/0
31:24	R/W-0	R/W-0	R/W-0	R/W-0	R/W-0	R/W-0	R/W-0	R/W-0
	IFS31	IFS30	IFS29	IFS28	IFS27	IFS26	IFS25	IFS24
23:16	R/W-0	R/W-0	R/W-0	R/W-0	R/W-0	R/W-0	R/W-0	R/W-0
	IFS23	IFS22	IFS21	IFS20	IFS19	IFS18	IFS17	IFS16
15:8	R/W-0	R/W-0	R/W-0	R/W-0	R/W-0	R/W-0	R/W-0	R/W-0
	IFS15	IFS14	IFS13	IFS12	IFS11	IFS10	IFS9	IFS8
7:0	R/W-0	R/W-0	R/W-0	R/W-0	R/W-0	R/W-0	R/W-0	R/W-0
	IFS7	IFS6	IFS5	IFS4	IFS3	IFS2	IFS1	IFS0

Legend:			
R = Readable bit	W = Writable bit	U = Unimplemented bit, read as '0'	
-n = Value at POR	'1' = Bit is set	'0' = Bit is cleared	x = Bit is unknown

bit 31-0 **IFS31-IFS0:** Interrupt Flag Status bits
1 = Interrupt request has occurred
0 = No interrupt request has occurred

Note: This register represents a generic definition of the IFSx register. Refer to Table 8-2 for the exact bit definitions.

REGISTER 8-6: IECx: INTERRUPT ENABLE CONTROL REGISTER

Bit Range	Bit 31/23/15/7	Bit 30/22/14/6	Bit 29/21/13/5	Bit 28/20/12/4	Bit 27/19/11/3	Bit 26/18/10/2	Bit 25/17/9/1	Bit 24/16/8/0
31:24	R/W-0	R/W-0	R/W-0	R/W-0	R/W-0	R/W-0	R/W-0	R/W-0
	IEC31	IEC30	IEC29	IEC28	IEC27	IEC26	IEC25	IEC24
23:16	R/W-0	R/W-0	R/W-0	R/W-0	R/W-0	R/W-0	R/W-0	R/W-0
	IEC23	IEC22	IEC21	IEC20	IEC19	IEC18	IEC17	IEC16
15:8	R/W-0	R/W-0	R/W-0	R/W-0	R/W-0	R/W-0	R/W-0	R/W-0
	IEC15	IEC14	IEC13	IEC12	IEC11	IEC10	IEC9	IEC8
7:0	R/W-0	R/W-0	R/W-0	R/W-0	R/W-0	R/W-0	R/W-0	R/W-0
	IEC7	IEC6	IEC5	IEC4	IEC3	IEC2	IEC1	IEC0

Legend:			
R = Readable bit	W = Writable bit	U = Unimplemented bit, read as '0'	
-n = Value at POR	'1' = Bit is set	'0' = Bit is cleared	x = Bit is unknown

bit 31-0 **IEC31-IEC0:** Interrupt Enable bits
1 = Interrupt is enabled
0 = Interrupt is disabled

Note: This register represents a generic definition of the IFSx register. Refer to Table 8-2 for the exact bit definitions.

 © 2020 Microchip Technology Inc.

REGISTER 8-7: IPCx: INTERRUPT PRIORITY CONTROL REGISTER

Bit Range	Bit 31/23/15/7	Bit 30/22/14/6	Bit 29/21/13/5	Bit 28/20/12/4	Bit 27/19/11/3	Bit 26/18/10/2	Bit 25/17/9/1	Bit 24/16/8/0
31:24	U-0	U-0	U-0	R/W-0	R/W-0	R/W-0	R/W-0	R/W-0
	—	—	—	IP3[2:0]			IS3[1:0]	
23:16	U-0	U-0	U-0	R/W-0	R/W-0	R/W-0	R/W-0	R/W-0
	—	—	—	IP2[2:0]			IS2[1:0]	
15:8	U-0	U-0	U-0	R/W-0	R/W-0	R/W-0	R/W-0	R/W-0
	—	—	—	IP1[2:0]			IS1[1:0]	
7:0	U-0	U-0	U-0	R/W-0	R/W-0	R/W-0	R/W-0	R/W-0
	—	—	—	IP0[2:0]			IS0[1:0]	

Legend:			
R = Readable bit	W = Writable bit	U = Unimplemented bit, read as '0'	
-n = Value at POR	'1' = Bit is set	'0' = Bit is cleared	x = Bit is unknown

bit 31-29 **Unimplemented:** Read as '0'

bit 28-26 **IP3[2:0]:** Interrupt Priority bits
111 = Interrupt priority is 7
•
•
•
010 = Interrupt priority is 2
001 = Interrupt priority is 1
000 = Interrupt is disabled

bit 25-24 **IS3[1:0]:** Interrupt Subpriority bits
11 = Interrupt subpriority is 3
10 = Interrupt subpriority is 2
01 = Interrupt subpriority is 1
00 = Interrupt subpriority is 0

bit 23-21 **Unimplemented:** Read as '0'

bit 20-18 **IP2[2:0]:** Interrupt Priority bits
111 = Interrupt priority is 7
•
•
•
010 = Interrupt priority is 2
001 = Interrupt priority is 1
000 = Interrupt is disabled

bit 17-16 **IS2[1:0]:** Interrupt Subpriority bits
11 = Interrupt subpriority is 3
10 = Interrupt subpriority is 2
01 = Interrupt subpriority is 1
00 = Interrupt subpriority is 0

bit 15-13 **Unimplemented:** Read as '0'

bit 12-10 **IP1[2:0]:** Interrupt Priority bits
111 = Interrupt priority is 7
•
•
•
010 = Interrupt priority is 2
001 = Interrupt priority is 1
000 = Interrupt is disabled

Note: This register represents a generic definition of the IPCx register. Refer to Table 8-2 for the exact bit definitions.

REGISTER 8-7: IPCx: INTERRUPT PRIORITY CONTROL REGISTER (CONTINUED)

bit 9-8 **IS1[1:0]:** Interrupt Subpriority bits
11 = Interrupt subpriority is 3
10 = Interrupt subpriority is 2
01 = Interrupt subpriority is 1
00 = Interrupt subpriority is 0

bit 7-5 **Unimplemented:** Read as '0'

bit 4-2 **IP0[2:0]:** Interrupt Priority bits
111 = Interrupt priority is 7
•
•
•
010 = Interrupt priority is 2
001 = Interrupt priority is 1
000 = Interrupt is disabled

bit 1-0 **IS0[1:0]:** Interrupt Subpriority bits
11 = Interrupt subpriority is 3
10 = Interrupt subpriority is 2
01 = Interrupt subpriority is 1
00 = Interrupt subpriority is 0

Note: This register represents a generic definition of the IPCx register. Refer to Table 8-2 for the exact bit definitions.

 © 2020 Microchip Technology Inc.

REGISTER 8-8: OFFx: INTERRUPT VECTOR ADDRESS OFFSET REGISTER (x = 0-167)

Bit Range	Bit 31/23/15/7	Bit 30/22/14/6	Bit 29/21/13/5	Bit 28/20/12/4	Bit 27/19/11/3	Bit 26/18/10/2	Bit 25/17/9/1	Bit 24/16/8/0
31:24	U-0	U-0	U-0	U-0	U-0	U-0	U-0	U-0
	—	—	—	—	—	—	—	—
23:16	U-0	U-0	U-0	U-0	U-0	U-0	R/W-0	R/W-0
	—	—	—	—	—	—	VOFF[17:16]	
15:8	R/W-0	R/W-0	R/W-0	R/W-0	R/W-0	R/W-0	R/W-0	R/W-0
	VOFF[15:8]							
7:0	R/W-0	R/W-0	R/W-0	R/W-0	R/W-0	R/W-0	R/W-0	U-0
	VOFF[7:1]							—

Legend:			
R = Readable bit	W = Writable bit	U = Unimplemented bit, read as '0'	
-n = Value at POR	'1' = Bit is set	'0' = Bit is cleared	x = Bit is unknown

bit 31-16 **Unimplemented:** Read as '0'

bit 17-1 **VOFF[17:1]:** Interrupt Vector 'x' Address Offset bits

bit 0 **Unimplemented:** Read as '0'

Note: x may not be continuous. Refer to Table 8-2 for available registers.

 © 2020 Microchip Technology Inc.

9.0 PREFETCH MODULE

Note: This data sheet summarizes the features of the PIC32MZ W1 family of devices. It is not intended to be a comprehensive reference source. To complement the information in this data sheet, refer to **Section 9. "Prefetch Module for Devices with L1 CPU Cache"** (DS60001649) in the *"PIC32MZ W1 Family Reference Manual"*, which is available from the Microchip web site (www.microchip.com/PIC32).

The prefetch module is a performance enhancing module that is included in the PIC32MZ W1 family of devices. When running at high-clock rates, Wait states must be inserted into Program Flash Memory (PFM) read transactions to meet the access time of the PFM. Wait states can be hidden to the core by prefetching and storing instructions in a temporary holding area that the CPU can access quickly. Although the data path to the CPU is 32 bits wide, the data path to the PFM is 256 bits wide. This wide data path provides the same bandwidth to the CPU as a 32-bit path running at eight times the frequency.

The prefetch module holds a subset of PFM in temporary holding spaces known as lines. Each line contains a tag and data field. Normally, the lines hold a copy of what is currently in memory to make instructions or data available to the CPU without Flash Wait states.

The following are key features of the prefetch module:

- 12x32 byte fully associative lines
- 4 lines for CPU instructions
- 4 lines for CPU data
- 4 lines for peripheral data
- 32 byte cache lines (256 bits) parallel memory fetch
- True/pseudo LRU replacement policy
- Configurable predictive prefetch
- Flash ECC support

A simplified block diagram of the prefetch module is shown in Figure 9-1.

FIGURE 9-1: PREFETCH MODULE BLOCK DIAGRAM

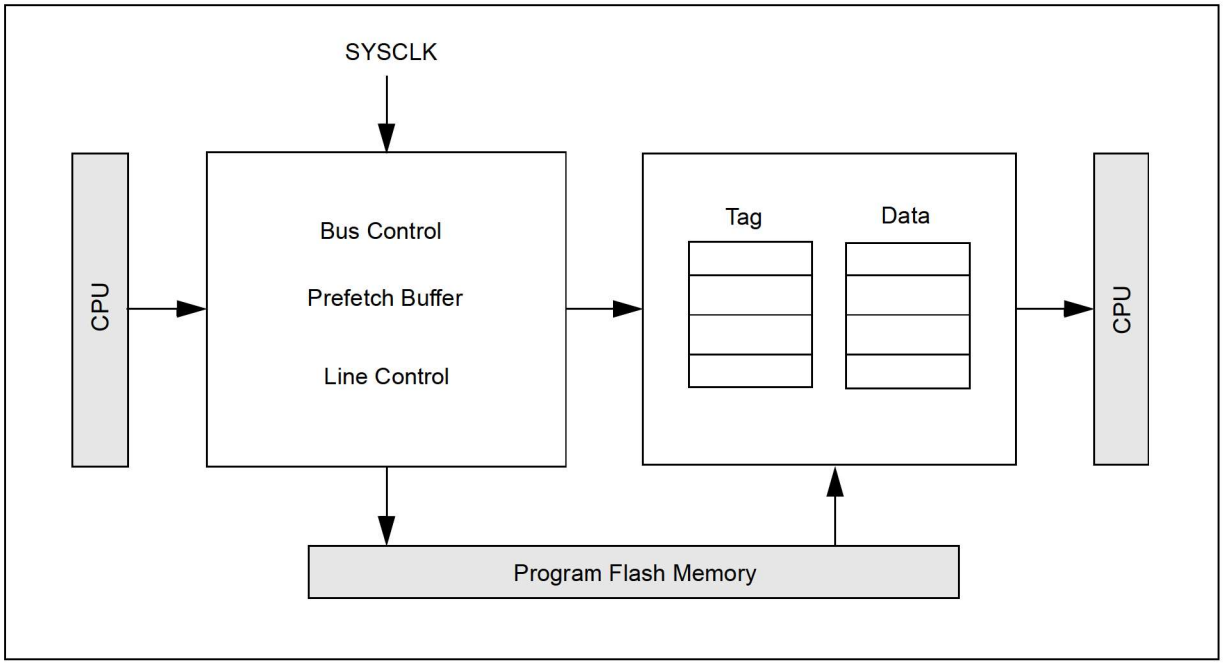

9.1 Prefetch Control Registers

TABLE 9-1: PREFETCH REGISTER MAP

Virtual Address (BF81_#)	Register Name(1)	Bit Range	Bits																All Resets
			31/15	30/14	29/13	28/12	27/11	26/10	25/9	24/8	23/7	22/6	21/5	20/4	19/3	18/2	17/1	16/0	
2400	PRECON	31:16	—	—	—	—	—	PERCHEEN	DCHEEN	ICHEEN	—	PERCHEINV	DCHEINV	ICHEINV	—	PERCHECOH	DCHECOH	ICHECOH	0000
		15:00	—	—	—	CHEPERFEN	—	—	—	PFMAWSEN	PFMSECEN	—	PREFEN[1:0]		PFMWS[3:0]				0007
2410	PRESTAT	31:16	—	—	—	—	PFMDED	PFMSEC	—	—	—	—	—	—	—	—	—	—	0000
		15:00	—	—	—	—	—	—	—	—	PFMSECCNT[7:0]								0000
2420	PREHIT	31:16	CHEHIT[31:16]																0000
		15:00	CHEHIT[15:0]																0000
2430	PREMIS	31:16	CHEMIS[31:16]																0000
		15:00	CHEMIS[15:0]																0000

Legend: x = unknown value on Reset, — = unimplemented, read as '0'. Reset values are shown in hexadecimal.

Note 1: All registers in this table have corresponding CLR, SET and INV registers at its virtual address, plus an offset of 0x4, 0x8 and 0xC, respectively. See **Section 13.3 "CLR, SET, and INV Registers"** for more information.

© 2020 Microchip Technology Inc.

REGISTER 9-1: PRECON: PREFETCH MODULE CONTROL REGISTER

Bit Range	Bit 31/23/15/7	Bit 30/22/14/6	Bit 29/21/13/5	Bit 28/20/12/4	Bit 27/19/11/3	Bit 26/18/10/2	Bit 25/17/9/1	Bit 24/16/8/0
31:24	U-0	U-0	U-0	U-0	U-0	R/W-1	R/W-1	R/W-1
	—	—	—	—	—	PERCHEEN	DCHEEN	ICHEEN
23:16	U-0	R/S/HC-0	R/S/HC-0	R/S/HC-0	U-0	R/W-0	R/W-0	R/W-0
	—	PERCHEINV	DCHEINV	ICHEINV	—	PERCHECOH	DCHECOH	ICHECOH
15:8	U-0	U-0	U-0	R/W-0	U-0	U-0	U-0	R/W-1
	—	—	—	CHEPERFEN	—	—	—	PFMAWSEN
7:0	R/W-0	U-0	R/W-0	R/W-0	U-0	R/W-1	R/W-1	R/W-1
	PFMSECEN	—	PREFEN[1:0]		PFMWS[3:0](1)			

Legend:	HC = Hardware Cleared	HS = Hardware Set	
R = Readable bit	W = Writable bit	U = Unimplemented bit, read as '0'	
S = Settable bit	'1' = Bit is set	'0' = Bit is cleared	x = Bit is unknown

bit 31-27 **Unimplemented:** Read as '0'

bit 26, **PERCHEEN:** Peripheral Data Cache Enable bit
1 = Caching enabled
0 = Caching disabled (and all lines invalidated)

bit 25 **DCHEEN:** Data Cache Enable bit
1 = Caching enabled
0 = Caching disabled (and all lines invalidated)

bit 24 **ICHEEN:** Instruction Cache Enable bit
1 = Caching enabled
0 = Caching disabled (and all lines invalidated)

bit 23 **Unimplemented:** Read as '0'

bit 22 **PERCHEINV:** Manual Invalidate Control for Peripheral Data Cache
1 = Force invalidate cache/invalidate busy
0 = Cache invalidation follows CHECOH/invalid complete

Note 1: PFB is included with iCache invalidate.

2: Hardware auto clears this bit when cache invalidate completes. Bits may clear at different times.

bit 21 **DCHEINV:** Manual Invalidate Control for Data Cache
1 = Force invalidate cache/invalidate busy
0 = Cache invalidation follows CHECOH/invalid complete

Note 1: PFB is included with iCache invalidate.

2: Hardware auto clears this bit when cache invalidate completes. Bits may clear at different times.

bit 20 **ICHEINV**: Manual Invalidate Control for Instruction Cache
1 = Force invalidate cache/invalidate busy
0 = Cache invalidation follows CHECOH/invalid complete

Note 1: PFB is included with iCache invalidate.

2: Hardware auto clears this bit when cache invalidate completes. Bits may clear at different times.

bit 19 **Unimplemented:** Read as '0'

Note 1: For the Wait states to SYSCLK relationship, refer to **40.0 "Electrical Specifications"**.

REGISTER 9-1: PRECON: PREFETCH MODULE CONTROL REGISTER (CONTINUED)

bit 18 **PERCHECOH:** Auto Cache Coherency Control for Peripheral Data Cache
1 = Auto invalidate cache on a programming event
0 = No auto invalidated cache on a programming event

Note: CHECOH must be stable before initiation of programming to ensure correct invalidation of data.

bit 17 **DCHECOH:** Auto Cache Coherency Control for Data Cache
1 = Auto invalidate cache on a programming event
0 = No auto invalidated cache on a programming event

Note: CHECOH must be stable before initiation of programming to ensure correct invalidation of data.

bit 16 **ICHECOH:** Auto Cache Coherency Control for Instruction Cache
1 = Auto invalidate cache on a programming event
0 = No auto invalidated cache on a programming event

Note: CHECOH must be stable before initiation of programming to ensure correct invalidation of data.

bit 15-13 **Unimplemented:** Read as '0'

bit 12 **CHEPERFEN**: Cache Performance Counters Enable
1 = Performance counters is enabled
0 = Performance counters is disabled

Note: Performance counters are reset on 0 to 1 transition of this bit.

bit 11-9 **Unimplemented:** Read as '0'

bit 8 **PFMAWSEN:** Address Wait State Enable
Total Flash wait states are ADRWS + PFMWS.
1 = Add 1 address Wait state - allowing for higher clock frequencies
0 = Add 0 address Wait states - allowing for higher performance at lower clock frequencies

bit 7 **PFMSECEN**: Flash Single-bit Error Corrected (SEC) Interrupt Enable bit
1 = Generate an interrupt when PFMSEC is set
0 = Do not generate an interrupt when PFMSEC is set

bit 6 **Unimplemented:** Read as '0'

bit 5-4 **PREFEN[1:0]**: Instruction Predictive Prefetch Enable
01 = Instruction predictive prefetch enabled for cacheable regions only
00 = Instruction predictive prefetch disabled
Other values are unavailable.

bit 3-0 **PFMWS[3:0]:** PFM Access Time Defined in Terms of SYSCLK Wait States bits(1)
Total Flash Wait states are ADRWS + PFMWS.
1111 = Fifteen Wait states
1110 = Fourteen Wait states
. . .

0001 = One Wait state
0000 = Zero Wait state

Note: This is not the Wait state seen by the CPU.

Note 1: For the Wait states to SYSCLK relationship, refer to **40.0 "Electrical Specifications"**.

 © 2020 Microchip Technology Inc.

REGISTER 9-2: PRESTAT: PREFETCH MODULE STATUS REGISTER

Bit Range	Bit 31/23/15/7	Bit 30/22/14/6	Bit 29/21/13/5	Bit 28/20/12/4	Bit 27/19/11/3	Bit 26/18/10/2	Bit 25/17/9/1	Bit 24/16/8/0
31:24	U-0	U-0	U-0	U-0	HS/HC/R/W-0	HS/HC/R/W-0	U-0	U-0
	—	—	—	—	PFMDED	PFMSEC	—	—
23:16	U-0	U-0	U-0	U-0	U-0	U-0	U-0	U-0
	—	—	—	—	—	—	—	—
15:8	U-0	U-0	U-0	U-0	U-0	U-0	U-0	U-0
	—	—	—	—	—	—	—	—
7:0	HS/HC/R/W-0	HS/HC/R/W-0	HS/HC/R/W-0	HS/HC/R/W-0	HS/HC/R/W-0	HS/HC/R/W-0	HS/HC/R/W-0	HS/HC/R/W-0
	PFMSECCNT[7:0]							

Legend:	HC = Hardware Cleared	HS = Hardware Set	
R = Readable bit	W = Writable bit	U = Unimplemented bit, read as '0'	
S = Settable bit	'1' = Bit is set	'0' = Bit is cleared	x = Bit is unknown

bit 31-28 **Unimplemented:** Read as '0'

bit 27 **PFMDED:** Flash Double-bit Error Detected (DED) Status bit
1 = An error has occurred
0 = An error has not occurred

Note: DED errors are reported in-band with the data using the bus error protocol. When reported for CPU reads they are seen as bus exception errors by the CPU.

bit 26 **PFMSEC:** Flash Single-bit Error Corrected (SEC) Status bit
1 = A SEC error occurred when PFMSECCNT[7:0] was equal to zero
0 = A SEC error has not occurred

Note: The error event is reported to the CPU via using the prefetch module interrupt event.

bit 25-8 **Unimplemented:** Read as '0'

bit 7-0 **PFMSECCNT[7:0]:** Flash SEC Count bits
Decrements (by 1) its count value each time an SEC error occurs. Holds at zero. When an SEC error occurs when PFMSECCNT is zero, the PFMSEC status is set. If PFMSECEN is also set, a pCache interrupt event is generated.

Note: This field counts all SEC errors and is not limited to SEC errors on unique addresses.

REGISTER 9-3: PREHIT: PREFETCH MODULE HIT STATISTICS REGISTER

Bit Range	Bit 31/23/15/7	Bit 30/22/14/6	Bit 29/21/13/5	Bit 28/20/12/4	Bit 27/19/11/3	Bit 26/18/10/2	Bit 25/17/9/1	Bit 24/16/8/0
31:24	R/H/C-0	R/H/C-0	R/H/C-0	R/H/C-0	R/H/C-0	R/H/C-0	R/H/C-0	R/H/C-0
	CHEHIT[31:24]							
23:16	R/H/C-0	R/H/C-0	R/H/C-0	R/H/C-0	R/H/C-0	R/H/C-0	R/H/C-0	R/H/C-0
	CHEHIT[23:16]							
15:8	R/H/C-0	R/H/C-0	R/H/C-0	R/H/C-0	R/H/C-0	R/H/C-0	R/H/C-0	R/H/C-0
	CHEHIT[15:8]							
7:0	R/H/C-0	R/H/C-0	R/H/C-0	R/H/C-0	R/H/C-0	R/H/C-0	R/H/C-0	R/H/C-0
	CHEHIT[7:0]							

Legend:	HC = Hardware Cleared	HS = Hardware Set	
R = Readable bit	W = Writable bit	U = Unimplemented bit, read as '0'	
S = Settable bit	'1' = Bit is set	'0' = Bit is cleared	x = Bit is unknown

bit 31-0 **CHEHIT[31:0]**: Instruction Cache Hit Count bits
When CHECON.CHEPERF = 1, CHEHIT increments once per iCache or PFB hit.

Note: CHEHIT is reset on 0 to 1 transition of CHECON.CHEPERF.

 © 2020 Microchip Technology Inc.

REGISTER 9-4: PREMIS: PREFETCH MODULE MISS STATISTICS REGISTER

Bit Range	Bit 31/23/15/7	Bit 30/22/14/6	Bit 29/21/13/5	Bit 28/20/12/4	Bit 27/19/11/3	Bit 26/18/10/2	Bit 25/17/9/1	Bit 24/16/8/0
31:24	R/H/C-0	R/H/C-0	R/H/C-0	R/H/C-0	R/H/C-0	R/H/C-0	R/H/C-0	R/H/C-0
	CHEMIS[31:24]							
23:16	R/H/C-0	R/H/C-0	R/H/C-0	R/H/C-0	R/H/C-0	R/H/C-0	R/H/C-0	R/H/C-0
	CHEMIS[23:16]							
15:8	R/H/C-0	R/H/C-0	R/H/C-0	R/H/C-0	R/H/C-0	R/H/C-0	R/H/C-0	R/H/C-0
	CHEMIS[15:8]							
7:0	R/H/C-0	R/H/C-0	R/H/C-0	R/H/C-0	R/H/C-0	R/H/C-0	R/H/C-0	R/H/C-0
	CHEMIS[7:0]							

Legend:	HC = Hardware Cleared	HS = Hardware Set	
R = Readable bit	W = Writable bit	U = Unimplemented bit, read as '0'	
S = Settable bit	'1' = Bit is set	'0' = Bit is cleared	x = Bit is unknown

bit 31-0 **CHEMIS[31:0]**: Instruction Cache Miss Count bits
When CHECON.CHEPERF = 1, CHEMIS increments once per iCache or PFB miss.

Note: CHEMIS is reset on 0 to 1 transition of CHECON.CHEPERF.

 © 2020 Microchip Technology Inc.

10.0 DIRECT MEMORY ACCESS (DMA) CONTROLLER

Note: This data sheet summarizes the features of the PIC32MZ W1 device. It is not intended to be a comprehensive reference source. To complement the information in this data sheet, refer to **Section 31. "Direct Memory Access (DMA) Controller"** (DS60001117) in the *"PIC32 Family Reference Manual"*, which is available from the Microchip web site (www.microchip.com/PIC32).

The DMA Controller is a bus master module useful for data transfers between different devices without CPU intervention. The source and destination of a DMA transfer can be any of the memory mapped modules existent in the device such as SPI, UART, and so on, or memory itself. Peripherals like SQI, ADC, and so on with dedicated DMA can also access the generic system DMA.

The following are key features of the DMA Controller:

- Eight identical channels:
  - Auto-increment source and destination address registers
  - Source and destination pointers
  - Memory to memory and memory to peripheral transfers
- Automatic Word-size detection:
  - Transfer granularity, down to byte level
  - Bytes need not be word-aligned at source and destination
- Fixed priority channel arbitration
- Flexible DMA channel operating modes:
  - Manual (software) or automatic (interrupt) DMA requests
  - One-shot or Auto-repeat Block Transfer modes
  - Channel-to-channel chaining
- Flexible DMA requests:
  - A DMA request can be selected from any of the peripheral interrupt sources
  - Each channel can select any (appropriate) observable interrupt as its DMA request source
  - A DMA transfer abort can be selected from any of the peripheral interrupt sources
  - Up to 2-byte pattern (data) match transfer termination
- Multiple DMA channel status interrupts:
  - DMA channel block transfer complete
  - Source empty or half empty
  - Destination full or half full
  - DMA transfer aborted due to an external event
  - Invalid DMA address generated
- DMA debug support features:
  - Most recent error address accessed by a DMA channel
  - Most recent DMA channel to transfer data
- CRC generation module:
  - CRC module can be assigned to any of the available channels
  - CRC module is highly configurable

FIGURE 10-1: DMA BLOCK DIAGRAM

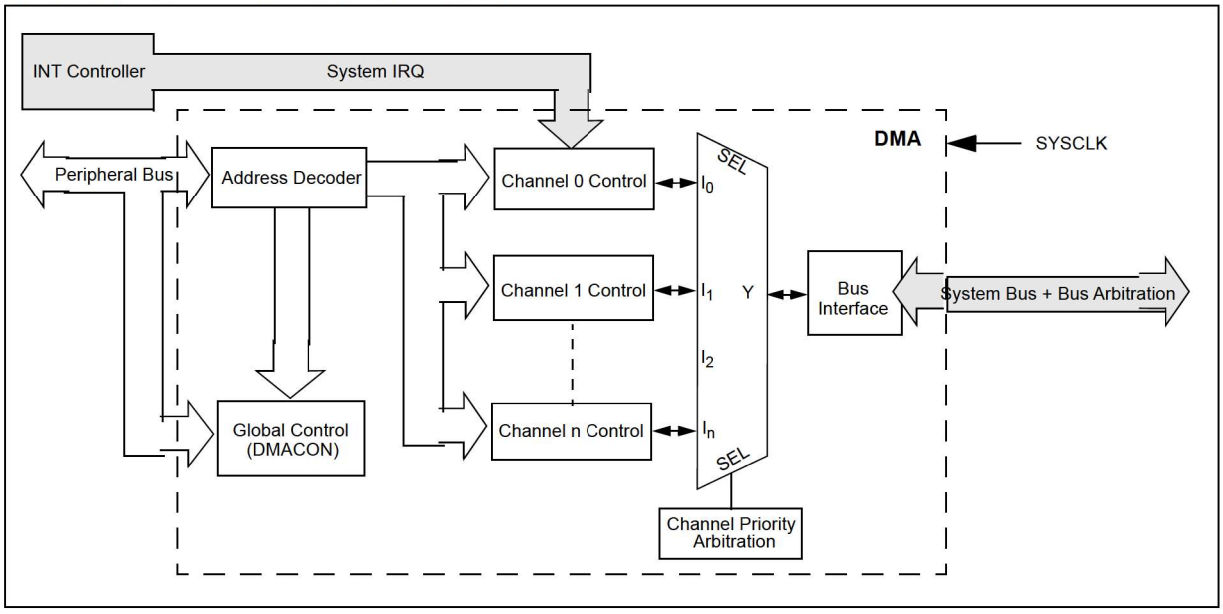

10.1 DMA Control Registers

TABLE 10-1: DMA GLOBAL REGISTER MAP

Virtual Address (BF81_#)	Register Name(1)	Bit Range	Bits															All Resets
			31/15	30/14	29/13	28/12	27/11	26/10	25/9	24/8	23/7	22/6	21/5	20/4	19/3	18/2	17/1	16/0	
1000	DMACON	31:16	—	—	—	—	—	—	—	—	—	—	—	—	—	—	—	—	0000
		15:0	ON	—	—	SUSPEND	DMABUSY	—	—	—	—	—	—	—	—	—	—	—	0000
1010	DMASTAT	31:16	RDWR	—	—	—	—	—	—	—	—	—	—	—	—	—	—	—	0000
		15:0	—	—	—	—	—	—	—	—	—	—	—	—	—	DMACH[2:0]			0000
1020	DMAADDR	31:16	DMAADDR[31:16]																0000
		15:0	DMAADDR[15:0]																0000

Legend: x = unknown value on Reset; — = unimplemented, read as '0'. Reset values are shown in hexadecimal.

Note 1: All registers in this table have corresponding CLR, SET and INV registers at its virtual address, plus an offset of 0x4, 0x8 and 0xC, respectively. See **Section 13.3 "CLR, SET, and INV Registers"** for more information.

TABLE 10-2: DMA CRC REGISTER MAP

Virtual Address (BF81_#)	Register Name(1)	Bit Range	Bits																All Resets
			31/15	30/14	29/13	28/12	27/11	26/10	25/9	24/8	23/7	22/6	21/5	20/4	19/3	18/2	17/1	16/0	
1030	DCRCCON	31:16	—	—	BYTO[1:0]		WBO	—	—	BITO	—	—	—	—	—	—	—	—	0000
		15:0	—	—	—	PLEN[4:0]					CRCEN	CRCAPP	CRCTYP	—	—	CRCCH[2:0]			0000
1040	DCRCDATA	31:16	DCRCDATA[31:16]																0000
		15:0	DCRCDATA[15:0]																0000
1050	DCRCXOR	31:16	DCRCXOR[31:16]																0000
		15:0	DCRCXOR[15:0]																0000

Legend: x = unknown value on Reset; — = unimplemented, read as '0'. Reset values are shown in hexadecimal.

Note 1: All registers in this table have corresponding CLR, SET and INV registers at their virtual addresses, plus offsets of 0x4, 0x8 and 0xC, respectively. See **Section 13.3 "CLR, SET, and INV Registers"** for more information.

© 2020 Microchip Technology Inc.

TABLE 10-3: DMA CHANNEL 0 THROUGH CHANNEL 7 REGISTER MAP

Virtual Address (BF81_#)	Register Name(1)	Bit Range	Bits																All Resets
			31/15	30/14	29/13	28/12	27/11	26/10	25/9	24/8	23/7	22/6	21/5	20/4	19/3	18/2	17/1	16/0	
1060	DCH0CON	31:16	CHPIGN[7:0]								—	—	—	—	—	—	—	—	0000
		15:0	CHBUSY	—	CHPIGNEN	—	CHPATLEN	—	—	CHCHNS	CHEN	CHAED	CHCHN	CHAEN	—	CHEDET	CHPRI[1:0]		0000
1070	DCH0ECON	31:16	—	—	—	—	—	—	—	—	CHAIRQ[7:0]								00FF
		15:0	CHSIRQ[7:0]								CFORCE	CABORT	PATEN	SIRQEN	AIRQEN	—	—	—	FF00
1080	DCH0INT	31:16	—	—	—	—	—	—	—	—	CHSDIE	CHSHIE	CHDDIE	CHDHIE	CHBCIE	CHCCIE	CHTAIE	CHERIE	0000
		15:0	—	—	—	—	—	—	—	—	CHSDIF	CHSHIF	CHDDIF	CHDHIF	CHBCIF	CHCCIF	CHTAIF	CHERIF	0000
1090	DCH0SSA	31:16	CHSSA[31:16]																0000
		15:0	CHSSA[15:0]																0000
10A0	DCH0DSA	31:16	CHDSA[31:16]																0000
		15:0	CHDSA[15:0]																0000
10B0	DCH0SSIZ	31:16	—	—	—	—	—	—	—	—	—	—	—	—	—	—	—	—	0000
		15:0	CHSSIZ[15:0]																0000
10C0	DCH0DSIZ	31:16	—	—	—	—	—	—	—	—	—	—	—	—	—	—	—	—	0000
		15:0	CHDSIZ[15:0]																0000
10D0	DCH0SPTR	31:16	—	—	—	—	—	—	—	—	—	—	—	—	—	—	—	—	0000
		15:0	CHSPTR[15:0]																0000
10E0	DCH0DPTR	31:16	—	—	—	—	—	—	—	—	—	—	—	—	—	—	—	—	0000
		15:0	CHDPTR[15:0]																0000
10F0	DCH0CSIZ	31:16	—	—	—	—	—	—	—	—	—	—	—	—	—	—	—	—	0000
		15:0	CHCSIZ[15:0]																0000
1100	DCH0CPTR	31:16	—	—	—	—	—	—	—	—	—	—	—	—	—	—	—	—	0000
		15:0	CHCPTR[15:0]																0000
1110	DCH0DAT	31:16	—	—	—	—	—	—	—	—	—	—	—	—	—	—	—	—	0000
		15:0	CHPDAT[15:0]																0000
1120	DCH1CON	31:16	CHPIGN[7:0]								—	—	—	—	—	—	—	—	0000
		15:0	CHBUSY	—	CHPIGNEN	—	CHPATLEN	—	—	CHCHNS	CHEN	CHAED	CHCHN	CHAEN	—	CHEDET	CHPRI[1:0]		0000
1130	DCH1ECON	31:16	—	—	—	—	—	—	—	—	CHAIRQ[7:0]								00FF
		15:0	CHSIRQ[7:0]								CFORCE	CABORT	PATEN	SIRQEN	AIRQEN	—	—	—	FF00
1140	DCH1INT	31:16	—	—	—	—	—	—	—	—	CHSDIE	CHSHIE	CHDDIE	CHDHIE	CHBCIE	CHCCIE	CHTAIE	CHERIE	0000
		15:0	—	—	—	—	—	—	—	—	CHSDIF	CHSHIF	CHDDIF	CHDHIF	CHBCIF	CHCCIF	CHTAIF	CHERIF	0000
1150	DCH1SSA	31:16	CHSSA[31:16]																0000
		15:0	CHSSA[15:0]																0000
1160	DCH1DSA	31:16	CHDSA[31:16]																0000
		15:0	CHDSA[15:0]																0000

Legend: x = unknown value on Reset; — = unimplemented, read as '0'. Reset values are shown in hexadecimal.

Note 1: All registers in this table have corresponding CLR, SET and INV registers at their virtual addresses, plus offsets of 0x4, 0x8 and 0xC, respectively. See **Section 13.3 "CLR, SET, and INV Registers"** for more information.

© 2020 Microchip Technology Inc.

TABLE 10-3: DMA CHANNEL 0 THROUGH CHANNEL 7 REGISTER MAP (CONTINUED)

Virtual Address (BF81_#)	Register Name(1)	Bit Range	Bits																All Resets
			31/15	30/14	29/13	28/12	27/11	26/10	25/9	24/8	23/7	22/6	21/5	20/4	19/3	18/2	17/1	16/0	
1170	DCH1SSIZ	31:16	—	—	—	—	—	—	—	—	—	—	—	—	—	—	—	—	0000
		15:0	CHSSIZ[15:0]																0000
1180	DCH1DSIZ	31:16	—	—	—	—	—	—	—	—	—	—	—	—	—	—	—	—	0000
		15:0	CHDSIZ[15:0]																0000
1190	DCH1SPTR	31:16	—	—	—	—	—	—	—	—	—	—	—	—	—	—	—	—	0000
		15:0	CHSPTR[15:0]																0000
11A0	DCH1DPTR	31:16	—	—	—	—	—	—	—	—	—	—	—	—	—	—	—	—	0000
		15:0	CHDPTR[15:0]																0000
11B0	DCH1CSIZ	31:16	—	—	—	—	—	—	—	—	—	—	—	—	—	—	—	—	0000
		15:0	CHCSIZ[15:0]																0000
11C0	DCH1CPTR	31:16	—	—	—	—	—	—	—	—	—	—	—	—	—	—	—	—	0000
		15:0	CHCPTR[15:0]																0000
11D0	DCH1DAT	31:16	—	—	—	—	—	—	—	—	—	—	—	—	—	—	—	—	0000
		15:0	CHPDAT[15:0]																0000
11E0	DCH2CON	31:16	CHPIGN[7:0]								—	—	—	—	—	—	—	—	0000
		15:0	CHBUSY	—	CHPIGNEN	—	CHPATLEN	—	—	CHCHNS	CHEN	CHAED	CHCHN	CHAEN	—	CHEDET	CHPRI[1:0]		0000
11F0	DCH2ECON	31:16	—	—	—	—	—	—	—	—	CHAIRQ[7:0]								00FF
		15:0	CHSIRQ[7:0]								CFORCE	CABORT	PATEN	SIRQEN	AIRQEN	—	—	—	FF00
1200	DCH2INT	31:16	—	—	—	—	—	—	—	—	CHSDIE	CHSHIE	CHDDIE	CHDHIE	CHBCIE	CHCCIE	CHTAIE	CHERIE	0000
		15:0	—	—	—	—	—	—	—	—	CHSDIF	CHSHIF	CHDDIF	CHDHIF	CHBCIF	CHCCIF	CHTAIF	CHERIF	0000
1210	DCH2SSA	31:16	CHSSA[31:16]																0000
		15:0	CHSSA[15:0]																0000
1220	DCH2DSA	31:16	CHDSA[31:16]																0000
		15:0	CHDSA[15:0]																0000
1230	DCH2SSIZ	31:16	—	—	—	—	—	—	—	—	—	—	—	—	—	—	—	—	0000
		15:0	CHSSIZ[15:0]																0000
1240	DCH2DSIZ	31:16	—	—	—	—	—	—	—	—	—	—	—	—	—	—	—	—	0000
		15:0	CHDSIZ[15:0]																0000
1250	DCH2SPTR	31:16	—	—	—	—	—	—	—	—	—	—	—	—	—	—	—	—	0000
		15:0	CHSPTR[15:0]																0000
1260	DCH2DPTR	31:16	—	—	—	—	—	—	—	—	—	—	—	—	—	—	—	—	0000
		15:0	CHDPTR[15:0]																0000
1270	DCH2CSIZ	31:16	—	—	—	—	—	—	—	—	—	—	—	—	—	—	—	—	0000
		15:0	CHCSIZ[15:0]																0000

Legend: x = unknown value on Reset; — = unimplemented, read as '0'. Reset values are shown in hexadecimal.

Note 1: All registers in this table have corresponding CLR, SET and INV registers at their virtual addresses, plus offsets of 0x4, 0x8 and 0xC, respectively. See **Section 13.3 "CLR, SET, and INV Registers"** for more information.

© 2020 Microchip Technology Inc.

TABLE 10-3: DMA CHANNEL 0 THROUGH CHANNEL 7 REGISTER MAP (CONTINUED)

Virtual Address (BF81_#)	Register Name(1)	Bit Range	Bits																All Resets
			31/15	30/14	29/13	28/12	27/11	26/10	25/9	24/8	23/7	22/6	21/5	20/4	19/3	18/2	17/1	16/0	
1280	DCH2CPTR	31:16	—	—	—	—	—	—	—	—	—	—	—	—	—	—	—	—	0000
		15:0	CHCPTR[15:0]																0000
1290	DCH2DAT	31:16	—	—	—	—	—	—	—	—	—	—	—	—	—	—	—	—	0000
		15:0	CHPDAT[15:0]																0000
12A0	DCH3CON	31:16	CHPIGN[7:0]								—	—	—	—	—	—	—	—	0000
		15:0	CHBUSY	—	CHPIGNEN	—	CHPATLEN	—	—	CHCHNS	CHEN	CHAED	CHCHN	CHAEN	—	CHEDET	CHPRI[1:0]		0000
12B0	DCH3ECON	31:16	—	—	—	—	—	—	—	—	CHAIRQ[7:0]								00FF
		15:0	CHSIRQ[7:0]								CFORCE	CABORT	PATEN	SIRQEN	AIRQEN	—	—	—	FF00
12C0	DCH3INT	31:16	—	—	—	—	—	—	—	—	CHSDIE	CHSHIE	CHDDIE	CHDHIE	CHBCIE	CHCCIE	CHTAIE	CHERIE	0000
		15:0	—	—	—	—	—	—	—	—	CHSDIF	CHSHIF	CHDDIF	CHDHIF	CHBCIF	CHCCIF	CHTAIF	CHERIF	0000
12D0	DCH3SSA	31:16	CHSSA[31:16]																0000
		15:0	CHSSA[15:0]																0000
12E0	DCH3DSA	31:16	CHDSA[31:16]																0000
		15:0	CHDSA[15:0]																0000
12F0	DCH3SSIZ	31:16	—	—	—	—	—	—	—	—	—	—	—	—	—	—	—	—	0000
		15:0	CHSSIZ[15:0]																0000
1300	DCH3DSIZ	31:16	—	—	—	—	—	—	—	—	—	—	—	—	—	—	—	—	0000
		15:0	CHDSIZ[15:0]																0000
1310	DCH3SPTR	31:16	—	—	—	—	—	—	—	—	—	—	—	—	—	—	—	—	0000
		15:0	CHSPTR[15:0]																0000
1320	DCH3DPTR	31:16	—	—	—	—	—	—	—	—	—	—	—	—	—	—	—	—	0000
		15:0	CHDPTR[15:0]																0000
1330	DCH3CSIZ	31:16	—	—	—	—	—	—	—	—	—	—	—	—	—	—	—	—	0000
		15:0	CHCSIZ[15:0]																0000
1340	DCH3CPTR	31:16	—	—	—	—	—	—	—	—	—	—	—	—	—	—	—	—	0000
		15:0	CHCPTR[15:0]																0000
1350	DCH3DAT	31:16	—	—	—	—	—	—	—	—	—	—	—	—	—	—	—	—	0000
		15:0	CHPDAT[15:0]																0000
1360	DCH4CON	31:16	CHPIGN[7:0]								—	—	—	—	—	—	—	—	0000
		15:0	CHBUSY	—	CHPIGNEN	—	CHPATLEN	—	—	CHCHNS	CHEN	CHAED	CHCHN	CHAEN	—	CHEDET	CHPRI[1:0]		0000
1370	DCH4ECON	31:16	—	—	—	—	—	—	—	—	CHAIRQ[7:0]								00FF
		15:0	CHSIRQ[7:0]								CFORCE	CABORT	PATEN	SIRQEN	AIRQEN	—	—	—	FF00
1380	DCH4INT	31:16	—	—	—	—	—	—	—	—	CHSDIE	CHSHIE	CHDDIE	CHDHIE	CHBCIE	CHCCIE	CHTAIE	CHERIE	0000
		15:0	—	—	—	—	—	—	—	—	CHSDIF	CHSHIF	CHDDIF	CHDHIF	CHBCIF	CHCCIF	CHTAIF	CHERIF	0000

Legend: x = unknown value on Reset; — = unimplemented, read as '0'. Reset values are shown in hexadecimal.

Note 1: All registers in this table have corresponding CLR, SET and INV registers at their virtual addresses, plus offsets of 0x4, 0x8 and 0xC, respectively. See **Section 13.3 "CLR, SET, and INV Registers"** for more information.

© 2020 Microchip Technology Inc.

TABLE 10-3: DMA CHANNEL 0 THROUGH CHANNEL 7 REGISTER MAP (CONTINUED)

Virtual Address (BF81_#)	Register Name(1)	Bit Range	Bits																All Resets
			31/15	30/14	29/13	28/12	27/11	26/10	25/9	24/8	23/7	22/6	21/5	20/4	19/3	18/2	17/1	16/0	
1390	DCH4SSA	31:16	CHSSA[31:16]																0000
		15:0	CHSSA[15:0]																0000
13A0	DCH4DSA	31:16	CHDSA[31:16]																0000
		15:0	CHDSA[15:0]																0000
13B0	DCH4SSIZ	31:16	—	—	—	—	—	—	—	—	—	—	—	—	—	—	—	—	0000
		15:0	CHSSIZ[15:0]																0000
13C0	DCH4DSIZ	31:16	—	—	—	—	—	—	—	—	—	—	—	—	—	—	—	—	0000
		15:0	CHDSIZ[15:0]																0000
13D0	DCH4SPTR	31:16	—	—	—	—	—	—	—	—	—	—	—	—	—	—	—	—	0000
		15:0	CHSPTR[15:0]																0000
13E0	DCH4DPTR	31:16	—	—	—	—	—	—	—	—	—	—	—	—	—	—	—	—	0000
		15:0	CHDPTR[15:0]																0000
13F0	DCH4CSIZ	31:16	—	—	—	—	—	—	—	—	—	—	—	—	—	—	—	—	0000
		15:0	CHCSIZ[15:0]																0000
1400	DCH4CPTR	31:16	—	—	—	—	—	—	—	—	—	—	—	—	—	—	—	—	0000
		15:0	CHCPTR[15:0]																0000
1410	DCH4DAT	31:16	—	—	—	—	—	—	—	—	—	—	—	—	—	—	—	—	0000
		15:0	CHPDAT[15:0]																0000
1420	DCH5CON	31:16	CHPIGN[7:0]								—	—	—	—	—	—	—	—	0000
		15:0	CHBUSY	—	CHPIGNEN	—	CHPATLEN	—	—	CHCHNS	CHEN	CHAED	CHCHN	CHAEN	—	CHEDET	CHPRI[1:0]		0000
1430	DCH5ECON	31:16	—	—	—	—	—	—	—	—	CHAIRQ[7:0]								00FF
		15:0	CHSIRQ[7:0]								CFORCE	CABORT	PATEN	SIRQEN	AIRQEN	—	—	—	FF00
1440	DCH5INT	31:16	—	—	—	—	—	—	—	—	CHSDIE	CHSHIE	CHDDIE	CHDHIE	CHBCIE	CHCCIE	CHTAIE	CHERIE	0000
		15:0	—	—	—	—	—	—	—	—	CHSDIF	CHSHIF	CHDDIF	CHDHIF	CHBCIF	CHCCIF	CHTAIF	CHERIF	0000
1450	DCH5SSA	31:16	CHSSA[31:16]																0000
		15:0	CHSSA[15:0]																0000
1460	DCH5DSA	31:16	CHDSA[31:16]																0000
		15:0	CHDSA[15:0]																0000
1470	DCH5SSIZ	31:16	—	—	—	—	—	—	—	—	—	—	—	—	—	—	—	—	0000
		15:0	CHSSIZ[15:0]																0000
1480	DCH5DSIZ	31:16	—	—	—	—	—	—	—	—	—	—	—	—	—	—	—	—	0000
		15:0	CHDSIZ[15:0]																0000
1490	DCH5SPTR	31:16	—	—	—	—	—	—	—	—	—	—	—	—	—	—	—	—	0000
		15:0	CHSPTR[15:0]																0000

Legend: x = unknown value on Reset; — = unimplemented, read as '0'. Reset values are shown in hexadecimal.

Note 1: All registers in this table have corresponding CLR, SET and INV registers at their virtual addresses, plus offsets of 0x4, 0x8 and 0xC, respectively. See **Section 13.3 "CLR, SET, and INV Registers"** for more information.

© 2020 Microchip Technology Inc.

TABLE 10-3: DMA CHANNEL 0 THROUGH CHANNEL 7 REGISTER MAP (CONTINUED)

Virtual Address (BF81_#)	Register Name(1)	Bit Range	Bits																All Resets
			31/15	30/14	29/13	28/12	27/11	26/10	25/9	24/8	23/7	22/6	21/5	20/4	19/3	18/2	17/1	16/0	
14A0	DCH5DPTR	31:16	—	—	—	—	—	—	—	—	—	—	—	—	—	—	—	—	0000
		15:0	CHDPTR[15:0]																0000
14B0	DCH5CSIZ	31:16	—	—	—	—	—	—	—	—	—	—	—	—	—	—	—	—	0000
		15:0	CHCSIZ[15:0]																0000
14C0	DCH5CPTR	31:16	—	—	—	—	—	—	—	—	—	—	—	—	—	—	—	—	0000
		15:0	CHCPTR[15:0]																0000
14D0	DCH5DAT	31:16	—	—	—	—	—	—	—	—	—	—	—	—	—	—	—	—	0000
		15:0	CHPDAT[15:0]																0000
14E0	DCH6CON	31:16	CHPIGN[7:0]								—	—	—	—	—	—	—	—	0000
		15:0	CHBUSY	—	CHPIGNEN	—	CHPATLEN	—	—	CHCHNS	CHEN	CHAED	CHCHN	CHAEN	—	CHEDET	CHPRI[1:0]		0000
14F0	DCH6ECON	31:16	—	—	—	—	—	—	—	—	CHAIRQ[7:0]								00FF
		15:0	CHSIRQ[7:0]								CFORCE	CABORT	PATEN	SIRQEN	AIRQEN	—	—	—	FF00
1500	DCH6INT	31:16	—	—	—	—	—	—	—	—	CHSDIE	CHSHIE	CHDDIE	CHDHIE	CHBCIE	CHCCIE	CHTAIE	CHERIE	0000
		15:0	—	—	—	—	—	—	—	—	CHSDIF	CHSHIF	CHDDIF	CHDHIF	CHBCIF	CHCCIF	CHTAIF	CHERIF	0000
1510	DCH6SSA	31:16	CHSSA[31:16]																0000
		15:0	CHSSA[15:0]																0000
1520	DCH6DSA	31:16	CHDSA[31:16]																0000
		15:0	CHDSA[15:0]																0000
1530	DCH6SSIZ	31:16	—	—	—	—	—	—	—	—	—	—	—	—	—	—	—	—	0000
		15:0	CHSSIZ[15:0]																0000
1540	DCH6DSIZ	31:16	—	—	—	—	—	—	—	—	—	—	—	—	—	—	—	—	0000
		15:0	CHDSIZ[15:0]																0000
1550	DCH6SPTR	31:16	—	—	—	—	—	—	—	—	—	—	—	—	—	—	—	—	0000
		15:0	CHSPTR[15:0]																0000
1560	DCH6DPTR	31:16	—	—	—	—	—	—	—	—	—	—	—	—	—	—	—	—	0000
		15:0	CHDPTR[15:0]																0000
1570	DCH6CSIZ	31:16	—	—	—	—	—	—	—	—	—	—	—	—	—	—	—	—	0000
		15:0	CHCSIZ[15:0]																0000
1580	DCH6CPTR	31:16	—	—	—	—	—	—	—	—	—	—	—	—	—	—	—	—	0000
		15:0	CHCPTR[15:0]																0000
1590	DCH6DAT	31:16	—	—	—	—	—	—	—	—	—	—	—	—	—	—	—	—	0000
		15:0	CHPDAT[15:0]																0000
15A0	DCH7CON	31:16	CHPIGN[7:0]								—	—	—	—	—	—	—	—	0000
		15:0	CHBUSY	—	CHPIGNEN	—	CHPATLEN	—	—	CHCHNS	CHEN	CHAED	CHCHN	CHAEN	—	CHEDET	CHPRI[1:0]		0000

Legend: x = unknown value on Reset; — = unimplemented, read as '0'. Reset values are shown in hexadecimal.

Note 1: All registers in this table have corresponding CLR, SET and INV registers at their virtual addresses, plus offsets of 0x4, 0x8 and 0xC, respectively. See **Section 13.3 "CLR, SET, and INV Registers"** for more information.

TABLE 10-3: DMA CHANNEL 0 THROUGH CHANNEL 7 REGISTER MAP (CONTINUED)

Virtual Address (BF81_#)	Register Name(1)	Bit Range	Bits																All Resets
			31/15	30/14	29/13	28/12	27/11	26/10	25/9	24/8	23/7	22/6	21/5	20/4	19/3	18/2	17/1	16/0	
15B0	DCH7ECON	31:16	—	—	—	—	—	—	—	—	CHAIRQ[7:0]								00FF
		15:0	CHSIRQ[7:0]								CFORCE	CABORT	PATEN	SIRQEN	AIRQEN	—	—	—	FF00
15C0	DCH7INT	31:16	—	—	—	—	—	—	—	—	CHSDIE	CHSHIE	CHDDIE	CHDHIE	CHBCIE	CHCCIE	CHTAIE	CHERIE	0000
		15:0	—	—	—	—	—	—	—	—	CHSDIF	CHSHIF	CHDDIF	CHDHIF	CHBCIF	CHCCIF	CHTAIF	CHERIF	0000
15D0	DCH7SSA	31:16	CHSSA[31:16]																0000
		15:0	CHSSA[15:0]																0000
15E0	DCH7DSA	31:16	CHDSA[31:16]																0000
		15:0	CHDSA[15:0]																0000
15F0	DCH7SSIZ	31:16	—	—	—	—	—	—	—	—	—	—	—	—	—	—	—	—	0000
		15:0	CHSSIZ[15:0]																0000
1600	DCH7DSIZ	31:16	—	—	—	—	—	—	—	—	—	—	—	—	—	—	—	—	0000
		15:0	CHDSIZ[15:0]																0000
1610	DCH7SPTR	31:16	—	—	—	—	—	—	—	—	—	—	—	—	—	—	—	—	0000
		15:0	CHSPTR[15:0]																0000
1620	DCH7DPTR	31:16	—	—	—	—	—	—	—	—	—	—	—	—	—	—	—	—	0000
		15:0	CHDPTR[15:0]																0000
1630	DCH7CSIZ	31:16	—	—	—	—	—	—	—	—	—	—	—	—	—	—	—	—	0000
		15:0	CHCSIZ[15:0]																0000
1640	DCH7CPTR	31:16	—	—	—	—	—	—	—	—	—	—	—	—	—	—	—	—	0000
		15:0	CHCPTR[15:0]																0000
1650	DCH7DAT	31:16	—	—	—	—	—	—	—	—	—	—	—	—	—	—	—	—	0000
		15:0	CHPDAT[15:0]																0000

Legend: x = unknown value on Reset; — = unimplemented, read as '0'. Reset values are shown in hexadecimal.

Note 1: All registers in this table have corresponding CLR, SET and INV registers at their virtual addresses, plus offsets of 0x4, 0x8 and 0xC, respectively. See **Section 13.3 "CLR, SET, and INV Registers"** for more information.

© 2020 Microchip Technology Inc.

REGISTER 10-1: DMACON: DMA CONTROLLER CONTROL REGISTER

Bit Range	Bit 31/23/15/7	Bit 30/22/14/6	Bit 29/21/13/5	Bit 28/20/12/4	Bit 27/19/11/3	Bit 26/18/10/2	Bit 25/17/9/1	Bit 24/16/8/0
31:24	U-0	U-0	U-0	U-0	U-0	U-0	U-0	U-0
	—	—	—	—	—	—	—	—
23:16	U-0	U-0	U-0	U-0	U-0	U-0	U-0	U-0
	—	—	—	—	—	—	—	—
15:8	R/W-0	U-0	U-0	R/W-0	R/W-0	U-0	U-0	U-0
	ON	—	—	SUSPEND	DMABUSY	—	—	—
7:0	U-0	U-0	U-0	U-0	U-0	U-0	U-0	U-0
	—	—	—	—	—	—	—	—

Legend:			
R = Readable bit	W = Writable bit	U = Unimplemented bit, read as '0'	
-n = Value at POR	'1' = Bit is set	'0' = Bit is cleared	x = Bit is unknown

bit 31-16 **Unimplemented:** Read as '0'

bit 15 **ON:** DMA On bit
1 = DMA module is enabled
0 = DMA module is disabled

bit 14-13 **Unimplemented:** Read as '0'

bit 12 **SUSPEND:** DMA Suspend bit
1 = DMA transfers are suspended to allow CPU uninterrupted access to data bus
0 = DMA operates normally

bit 11 **DMABUSY:** DMA Module Busy bit
1 = DMA module is active and is transferring data
0 = DMA module is disabled and not actively transferring data

bit 10-0 **Unimplemented:** Read as '0'

REGISTER 10-2: DMASTAT: DMA STATUS REGISTER

Bit Range	Bit 31/23/15/7	Bit 30/22/14/6	Bit 29/21/13/5	Bit 28/20/12/4	Bit 27/19/11/3	Bit 26/18/10/2	Bit 25/17/9/1	Bit 24/16/8/0
31:24	R-0	U-0	U-0	U-0	U-0	U-0	U-0	U-0
	RDWR	—	—	—	—	—	—	—
23:16	U-0	U-0	U-0	U-0	U-0	U-0	U-0	U-0
	—	—	—	—	—	—	—	—
15:8	U-0	U-0	U-0	U-0	U-0	U-0	U-0	U-0
	—	—	—	—	—	—	—	—
7:0	U-0	U-0	U-0	U-0	U-0	R-0	R-0	R-0
	—	—	—	—	—	DMACH[2:0]		

Legend:			
R = Readable bit	W = Writable bit	U = Unimplemented bit, read as '0'	
-n = Value at POR	'1' = Bit is set	'0' = Bit is cleared	x = Bit is unknown

bit 31 **RDWR:** Read/Write Status bit
1 = Last DMA bus access when an error was detected was a read
0 = Last DMA bus access when an error was detected was a write

bit 30-3 **Unimplemented:** Read as '0'

bit 2-0 **DMACH[2:0]:** DMA Channel bits
These bits contain the value of the most recent active DMA channel when an error is detected.

REGISTER 10-3: DMAADDR: DMA ADDRESS REGISTER

Bit Range	Bit 31/23/15/7	Bit 30/22/14/6	Bit 29/21/13/5	Bit 28/20/12/4	Bit 27/19/11/3	Bit 26/18/10/2	Bit 25/17/9/1	Bit 24/16/8/0
31:24	R-0	R-0	R-0	R-0	R-0	R-0	R-0	R-0
	DMAADDR[31:24]							
23:16	R-0	R-0	R-0	R-0	R-0	R-0	R-0	R-0
	DMAADDR[23:16]							
15:8	R-0	R-0	R-0	R-0	R-0	R-0	R-0	R-0
	DMAADDR[15:8]							
7:0	R-0	R-0	R-0	R-0	R-0	R-0	R-0	R-0
	DMAADDR[7:0]							

Legend:			
R = Readable bit	W = Writable bit	U = Unimplemented bit, read as '0'	
-n = Value at POR	'1' = Bit is set	'0' = Bit is cleared	x = Bit is unknown

bit 31-0 **DMAADDR[31:0]:** DMA Module Address bits
These bits contain the address of the most recent DMA access when an error is detected.

Note: The DMAEADDR register will be cleared when its contents are read. If more than one error occurs at the same time, the read transaction will be recorded. Additional later transfers with an error will not update this register until it has been read or cleared.

 © 2020 Microchip Technology Inc.

REGISTER 10-4: DCRCCON: DMA CRC CONTROL REGISTER

Bit Range	Bit 31/23/15/7	Bit 30/22/14/6	Bit 29/21/13/5	Bit 28/20/12/4	Bit 27/19/11/3	Bit 26/18/10/2	Bit 25/17/9/1	Bit 24/16/8/0
31:24	U-0	U-0	R/W-0	R/W-0	R/W-0	U-0	U-0	R/W-0
	—	—	BYTO[1:0]		WBO(1)	—	—	BITO
23:16	U-0	U-0	U-0	U-0	U-0	U-0	U-0	U-0
	—	—	—	—	—	—	—	—
15:8	U-0	U-0	U-0	R/W-0	R/W-0	R/W-0	R/W-0	R/W-0
	—	—	—	PLEN[4:0]				
7:0	R/W-0	R/W-0	R/W-0	U-0	U-0	R/W-0	R/W-0	R/W-0
	CRCEN	CRCAPP(1)	CRCTYP	—	—	CRCCH[2:0]		

Legend:			
R = Readable bit	W = Writable bit	U = Unimplemented bit, read as '0'	
-n = Value at POR	'1' = Bit is set	'0' = Bit is cleared	x = Bit is unknown

bit 31-30 **Unimplemented:** Read as '0'

bit 29-28 **BYTO[1:0]:** CRC Byte Order Selection bits
- 11 = Endian byte swap on half-word boundaries (in other words, source half-word order with reverse source byte order per half-word)
- 10 = Swap half-words on word boundaries (in other words, reverse source half-word order with source byte order per half-word)
- 01 = Endian byte swap on word boundaries (in other words, reverse source byte order)
- 00 = No swapping (i.e., source byte order)

bit 27 **WBO:** CRC Write Byte Order Selection bit(1)
- 1 = Source data is written to the destination re-ordered as defined by BYTO[1:0]
- 0 = Source data is written to the destination unaltered

bit 26-25 **Unimplemented:** Read as '0'

bit 24 **BITO:** CRC Bit Order Selection bit

When CRCTYP (DCRCCON[5]) = 1 (CRC module is in IP Header mode):
- 1 = The IP header checksum is calculated Least Significant bit (LSb) first (in other words, reflected)
- 0 = The IP header checksum is calculated Most Significant bit (MSb) first (in other words, not reflected)

When CRCTYP (DCRCCON[5]) = 0 (CRC module is in LFSR mode):
- 1 = The LFSR CRC is calculated Least Significant bit first (in other words, reflected)
- 0 = The LFSR CRC is calculated Most Significant bit first (in other words, not reflected)

bit 23-13 **Unimplemented:** Read as '0'

bit 12-8 **PLEN[4:0]:** Polynomial Length bits(1)

When CRCTYP (DCRCCON[5]) = 1 (CRC module is in IP Header mode):
These bits are unused.

When CRCTYP (DCRCCON[5]) = 0 (CRC module is in LFSR mode):
Denotes the length of the polynomial – 1.

bit 7 **CRCEN:** CRC Enable bit
- 1 = CRC module is enabled and channel transfers are routed through the CRC module
- 0 = CRC module is disabled and channel transfers proceed normally

Note 1: When WBO = 1, unaligned transfers are not supported and the CRCAPP bit cannot be set.

REGISTER 10-4: DCRCCON: DMA CRC CONTROL REGISTER (CONTINUED)

bit 6 **CRCAPP:** CRC Append Mode bit(1)
1 = DMA transfers data from the source into the CRC but not to the destination. When a block transfer completes the DMA writes the calculated CRC value to the location given by CHxDSA.
0 = DMA transfers data from the source through the CRC obeying WBO as it writes the data to the destination.

bit 5 **CRCTYP:** CRC Type Selection bit
1 = The CRC module calculates an IP header checksum
0 = The CRC module calculates a LFSR CRC

bit 4-3 **Unimplemented:** Read as '0'

bit 2-0 **CRCCH[2:0]:** CRC Channel Select bits
111 = CRC is assigned to Channel 7
110 = CRC is assigned to Channel 6
101 = CRC is assigned to Channel 5
100 = CRC is assigned to Channel 4
011 = CRC is assigned to Channel 3
010 = CRC is assigned to Channel 2
001 = CRC is assigned to Channel 1
000 = CRC is assigned to Channel 0

Note 1: When WBO = 1, unaligned transfers are not supported and the CRCAPP bit cannot be set.

 © 2020 Microchip Technology Inc.

REGISTER 10-5: DCRCDATA: DMA CRC DATA REGISTER

Bit Range	Bit 31/23/15/7	Bit 30/22/14/6	Bit 29/21/13/5	Bit 28/20/12/4	Bit 27/19/11/3	Bit 26/18/10/2	Bit 25/17/9/1	Bit 24/16/8/0
31:24	R/W-0	R/W-0	R/W-0	R/W-0	R/W-0	R/W-0	R/W-0	R/W-0
	DCRCDATA[31:24]							
23:16	R/W-0	R/W-0	R/W-0	R/W-0	R/W-0	R/W-0	R/W-0	R/W-0
	DCRCDATA[23:16]							
15:8	R/W-0	R/W-0	R/W-0	R/W-0	R/W-0	R/W-0	R/W-0	R/W-0
	DCRCDATA[15:8]							
7:0	R/W-0	R/W-0	R/W-0	R/W-0	R/W-0	R/W-0	R/W-0	R/W-0
	DCRCDATA[7:0]							

Legend:			
R = Readable bit	W = Writable bit	U = Unimplemented bit, read as '0'	
-n = Value at POR	'1' = Bit is set	'0' = Bit is cleared	x = Bit is unknown

bit 31-0 **DCRCDATA[31:0]:** CRC Data Register bits

Writing to this register will seed the CRC generator. Reading from this register returns the current value of the CRC. Bits greater than PLEN will return '0' on any read.

When CRCTYP (DCRCCON[5]) = 1 (CRC module is in IP Header mode):
Only the lower 16 bits contain IP header checksum information. The upper 16 bits are always '0'. Data written to this register is converted and read back in 1's complement form (in other words, current IP header checksum value).

When CRCTYP (DCRCCON[5]) = 0 (CRC module is in LFSR mode):
Bits greater than PLEN returns '0' on any read.

REGISTER 10-6: DCRCXOR: DMA CRCXOR ENABLE REGISTER

Bit Range	Bit 31/23/15/7	Bit 30/22/14/6	Bit 29/21/13/5	Bit 28/20/12/4	Bit 27/19/11/3	Bit 26/18/10/2	Bit 25/17/9/1	Bit 24/16/8/0
31:24	R/W-0	R/W-0	R/W-0	R/W-0	R/W-0	R/W-0	R/W-0	R/W-0
	DCRCXOR[31:24]							
23:16	R/W-0	R/W-0	R/W-0	R/W-0	R/W-0	R/W-0	R/W-0	R/W-0
	DCRCXOR[23:16]							
15:8	R/W-0	R/W-0	R/W-0	R/W-0	R/W-0	R/W-0	R/W-0	R/W-0
	DCRCXOR[15:8]							
7:0	R/W-0	R/W-0	R/W-0	R/W-0	R/W-0	R/W-0	R/W-0	R/W-0
	DCRCXOR[7:0]							

Legend:			
R = Readable bit	W = Writable bit	U = Unimplemented bit, read as '0'	
-n = Value at POR	'1' = Bit is set	'0' = Bit is cleared	x = Bit is unknown

bit 31-0 **DCRCXOR[31:0]:** CRC XOR Register bits
When CRCTYP (DCRCCON[5]) = 1 (CRC module is in IP Header mode):
This register is unused.

When CRCTYP (DCRCCON[5]) = 0 (CRC module is in LFSR mode):
1 = Enable the XOR input to the Shift register
0 = Disable the XOR input to the Shift register; data is shifted in directly from the previous stage in the register

 © 2020 Microchip Technology Inc.

REGISTER 10-7: DCHxCON: DMA CHANNEL x CONTROL REGISTER

Bit Range	Bit 31/23/15/7	Bit 30/22/14/6	Bit 29/21/13/5	Bit 28/20/12/4	Bit 27/19/11/3	Bit 26/18/10/2	Bit 25/17/9/1	Bit 24/16/8/0
31:24	R/W-0	R/W-0	R/W-0	R/W-0	R/W-0	R/W-0	R/W-0	R/W-0
	CHPIGN[7:0]							
23:16	U-0	U-0	U-0	U-0	U-0	U-0	U-0	U-0
	—	—	—	—	—	—	—	—
15:8	R/W-0	U-0	R/W-0	U-0	R/W-0	U-0	U-0	R/W-0
	CHBUSY	—	CHIPGNEN	—	CHPATLEN	—	—	CHCHNS(1)
7:0	R/W-0	R/W-0	R/W-0	R/W-0	U-0	R-0	R/W-0	R/W-0
	CHEN(2)	CHAED	CHCHN	CHAEN	—	CHEDET	CHPRI[1:0]	

Legend:			
R = Readable bit	W = Writable bit	U = Unimplemented bit, read as '0'	
-n = Value at POR	'1' = Bit is set	'0' = Bit is cleared	x = Bit is unknown

bit 31-24 **CHPIGN[7:0]:** Channel Register Data bits
Pattern Terminate mode:
Any byte matching these bits during a pattern match may be ignored during the pattern match determination when the CHPIGNEN bit is set. If a byte is read that is identical to this data byte, the pattern match logic will treat it as a "don't care" when the pattern matching logic is enabled and the CHPIGEN bit is set.

bit 23-16 **Unimplemented:** Read as '0'

bit 15 **CHBUSY:** Channel Busy bit
1 = Channel is active or enabled
0 = Channel is inactive or disabled

bit 14 **Unimplemented:** Read as '0'

bit 13 **CHPIGNEN:** Enable Pattern Ignore Byte bit
1 = Treat any byte that matches the CHPIGN[7:0] bits as a "don't care" when pattern matching is enabled
0 = Disable this feature

bit 12 **Unimplemented:** Read as '0'

bit 11 **CHPATLEN:** Pattern Length bit
1 = 2 byte length
0 = 1 byte length

bit 10-9 **Unimplemented:** Read as '0'

bit 8 **CHCHNS:** Chain Channel Selection bit(1)
1 = Chain to channel lower in natural priority (CH1 is enabled by CH2 transfer complete)
0 = Chain to channel higher in natural priority (CH1 is enabled by CH0 transfer complete)

bit 7 **CHEN:** Channel Enable bit(2)
1 = Channel is enabled
0 = Channel is disabled

bit 6 **CHAED:** Channel Allow Events If Disabled bit
1 = Channel start/abort events are registered, even if the channel is disabled
0 = Channel start/abort events are ignored if the channel is disabled

bit 5 **CHCHN:** Channel Chain Enable bit
1 = Allow channel to be chained
0 = Do not allow channel to be chained

Note 1: The chain selection bit takes effect when chaining is enabled (in other words, CHCHN = 1).

2: When the channel is suspended by clearing this bit, the user application should poll the CHBUSY bit (if available on the device variant) to see when the channel is suspended, as it may take some clock cycles to complete a current transaction before the channel is suspended.

REGISTER 10-7: DCHxCON: DMA CHANNEL x CONTROL REGISTER (CONTINUED)

bit 4 **CHAEN:** Channel Automatic Enable bit
1 = Channel is continuously enabled, and not automatically disabled after a block transfer is complete
0 = Channel is disabled on block transfer complete

bit 3 **Unimplemented:** Read as '0'

bit 2 **CHEDET:** Channel Event Detected bit
1 = An event has been detected
0 = No events have been detected

bit 1-0 **CHPRI[1:0]:** Channel Priority bits
11 = Channel has priority 3 (highest)
10 = Channel has priority 2
01 = Channel has priority 1
00 = Channel has priority 0

Note 1: The chain selection bit takes effect when chaining is enabled (in other words, CHCHN = 1).

2: When the channel is suspended by clearing this bit, the user application should poll the CHBUSY bit (if available on the device variant) to see when the channel is suspended, as it may take some clock cycles to complete a current transaction before the channel is suspended.

 © 2020 Microchip Technology Inc.

REGISTER 10-8: DCHxECON: DMA CHANNEL x EVENT CONTROL REGISTER

Bit Range	Bit 31/23/15/7	Bit 30/22/14/6	Bit 29/21/13/5	Bit 28/20/12/4	Bit 27/19/11/3	Bit 26/18/10/2	Bit 25/17/9/1	Bit 24/16/8/0
31:24	U-0	U-0	U-0	U-0	U-0	U-0	U-0	U-0
	—	—	—	—	—	—	—	—
23:16	R/W-1	R/W-1	R/W-1	R/W-1	R/W-1	R/W-1	R/W-1	R/W-1
	CHAIRQ[7:0](1)							
15:8	R/W-1	R/W-1	R/W-1	R/W-1	R/W-1	R/W-1	R/W-1	R/W-1
	CHSIRQ[7:0](1)							
7:0	S-0	S-0	R/W-0	R/W-0	R/W-0	U-0	U-0	U-0
	CFORCE	CABORT	PATEN	SIRQEN	AIRQEN	—	—	—

Legend:	S = Settable bit		
R = Readable bit	W = Writable bit	U = Unimplemented bit, read as '0'	
-n = Value at POR	'1' = Bit is set	'0' = Bit is cleared	x = Bit is unknown

bit 31-24 **Unimplemented:** Read as '0'

bit 23-16 **CHAIRQ[7:0]:** Channel Transfer Abort IRQ bits(1)

11111111 = Interrupt 255 aborts any transfers in progress and set CHAIF flag
•
•
•
00000001 = Interrupt 1 aborts any transfers in progress and set CHAIF flag
00000000 = Interrupt 0 aborts any transfers in progress and set CHAIF flag

bit 15-8 **CHSIRQ[7:0]:** Channel Transfer Start IRQ bits(1)

11111111 = Interrupt 255 initiates a DMA transfer
•
•
•
00000001 = Interrupt 1 initiates a DMA transfer
00000000 = Interrupt 0 initiates a DMA transfer

bit 7 **CFORCE:** DMA Forced Transfer bit

1 = A DMA transfer is forced to begin when this bit is written to a '1'
0 = This bit always reads '0'

bit 6 **CABORT:** DMA Abort Transfer bit

1 = A DMA transfer is aborted when this bit is written to a '1'
0 = This bit always reads '0'

bit 5 **PATEN:** Channel Pattern Match Abort Enable bit

1 = Abort transfer and clear CHEN on pattern match
0 = Pattern match is disabled

bit 4 **SIRQEN:** Channel Start IRQ Enable bit

1 = Start channel cell transfer if an interrupt matching CHSIRQ occurs
0 = Interrupt number CHSIRQ is ignored and does not start a transfer

bit 3 **AIRQEN:** Channel Abort IRQ Enable bit

1 = Channel transfer is aborted if an interrupt matching CHAIRQ occurs
0 = Interrupt number CHAIRQ is ignored and does not terminate a transfer

bit 2-0 **Unimplemented:** Read as '0'

Note 1: See Table 8-2 for the list of available interrupt IRQ sources.

REGISTER 10-9: DCHxINT: DMA CHANNEL x INTERRUPT CONTROL REGISTER

Bit Range	Bit 31/23/15/7	Bit 30/22/14/6	Bit 29/21/13/5	Bit 28/20/12/4	Bit 27/19/11/3	Bit 26/18/10/2	Bit 25/17/9/1	Bit 24/16/8/0
31:24	U-0	U-0	U-0	U-0	U-0	U-0	U-0	U-0
	—	—	—	—	—	—	—	—
23:16	R/W-0	R/W-0	R/W-0	R/W-0	R/W-0	R/W-0	R/W-0	R/W-0
	CHSDIE	CHSHIE	CHDDIE	CHDHIE	CHBCIE	CHCCIE	CHTAIE	CHERIE
15:8	U-0	U-0	U-0	U-0	U-0	U-0	U-0	U-0
	—	—	—	—	—	—	—	—
7:0	R/W-0	R/W-0	R/W-0	R/W-0	R/W-0	R/W-0	R/W-0	R/W-0
	CHSDIF	CHSHIF	CHDDIF	CHDHIF	CHBCIF	CHCCIF	CHTAIF	CHERIF

Legend:			
R = Readable bit	W = Writable bit	U = Unimplemented bit, read as '0'	
-n = Value at POR	'1' = Bit is set	'0' = Bit is cleared	x = Bit is unknown

bit 31-24 **Unimplemented:** Read as '0'

bit 23 **CHSDIE:** Channel Source Done Interrupt Enable bit
1 = Interrupt is enabled
0 = Interrupt is disabled

bit 22 **CHSHIE:** Channel Source Half Empty Interrupt Enable bit
1 = Interrupt is enabled
0 = Interrupt is disabled

bit 21 **CHDDIE:** Channel Destination Done Interrupt Enable bit
1 = Interrupt is enabled
0 = Interrupt is disabled

bit 20 **CHDHIE:** Channel Destination Half Full Interrupt Enable bit
1 = Interrupt is enabled
0 = Interrupt is disabled

bit 19 **CHBCIE:** Channel Block Transfer Complete Interrupt Enable bit
1 = Interrupt is enabled
0 = Interrupt is disabled

bit 18 **CHCCIE:** Channel Cell Transfer Complete Interrupt Enable bit
1 = Interrupt is enabled
0 = Interrupt is disabled

bit 17 **CHTAIE:** Channel Transfer Abort Interrupt Enable bit
1 = Interrupt is enabled
0 = Interrupt is disabled

bit 16 **CHERIE:** Channel Address Error Interrupt Enable bit
1 = Interrupt is enabled
0 = Interrupt is disabled

bit 15-8 **Unimplemented:** Read as '0'

bit 7 **CHSDIF:** Channel Source Done Interrupt Flag bit
1 = Channel Source Pointer has reached end of source (CHSPTR = CHSSIZ)
0 = No interrupt is pending

bit 6 **CHSHIF:** Channel Source Half Empty Interrupt Flag bit
1 = Channel Source Pointer has reached midpoint of source (CHSPTR = CHSSIZ/2)
0 = No interrupt is pending

 © 2020 Microchip Technology Inc.

REGISTER 10-9: DCHxINT: DMA CHANNEL x INTERRUPT CONTROL REGISTER (CONTINUED)

bit 5 **CHDDIF:** Channel Destination Done Interrupt Flag bit
1 = Channel Destination Pointer has reached end of destination (CHDPTR = CHDSIZ)
0 = No interrupt is pending

bit 4 **CHDHIF:** Channel Destination Half Full Interrupt Flag bit
1 = Channel Destination Pointer has reached midpoint of destination (CHDPTR = CHDSIZ/2)
0 = No interrupt is pending

bit 3 **CHBCIF:** Channel Block Transfer Complete Interrupt Flag bit
1 = A block transfer has been completed (the larger of CHSSIZ/CHDSIZ bytes has been transferred), or a pattern match event occurs
0 = No interrupt is pending

bit 2 **CHCCIF:** Channel Cell Transfer Complete Interrupt Flag bit
1 = A cell transfer has been completed (CHCSIZ bytes have been transferred)
0 = No interrupt is pending

bit 1 **CHTAIF:** Channel Transfer Abort Interrupt Flag bit
1 = An interrupt matching CHAIRQ has been detected and the DMA transfer has been aborted
0 = No interrupt is pending

bit 0 **CHERIF:** Channel Address Error Interrupt Flag bit
1 = A channel address error has been detected; either the source or the destination address is invalid
0 = No interrupt is pending

REGISTER 10-10: DCHxSSA: DMA CHANNEL x SOURCE START ADDRESS REGISTER

Bit Range	Bit 31/23/15/7	Bit 30/22/14/6	Bit 29/21/13/5	Bit 28/20/12/4	Bit 27/19/11/3	Bit 26/18/10/2	Bit 25/17/9/1	Bit 24/16/8/0
31:24	R/W-0	R/W-0	R/W-0	R/W-0	R/W-0	R/W-0	R/W-0	R/W-0
	CHSSA[31:24]							
23:16	R/W-0	R/W-0	R/W-0	R/W-0	R/W-0	R/W-0	R/W-0	R/W-0
	CHSSA[23:16]							
15:8	R/W-0	R/W-0	R/W-0	R/W-0	R/W-0	R/W-0	R/W-0	R/W-0
	CHSSA[15:8]							
7:0	R/W-0	R/W-0	R/W-0	R/W-0	R/W-0	R/W-0	R/W-0	R/W-0
	CHSSA[7:0]							

Legend:			
R = Readable bit	W = Writable bit	U = Unimplemented bit, read as '0'	
-n = Value at POR	'1' = Bit is set	'0' = Bit is cleared	x = Bit is unknown

bit 31-0 **CHSSA[31:0]** Channel Source Start Address bits

Note: This must be the physical address of the source.

REGISTER 10-11: DCHxDSA: DMA CHANNEL x DESTINATION START ADDRESS REGISTER

Bit Range	Bit 31/23/15/7	Bit 30/22/14/6	Bit 29/21/13/5	Bit 28/20/12/4	Bit 27/19/11/3	Bit 26/18/10/2	Bit 25/17/9/1	Bit 24/16/8/0
31:24	R/W-0	R/W-0	R/W-0	R/W-0	R/W-0	R/W-0	R/W-0	R/W-0
	CHDSA[31:24]							
23:16	R/W-0	R/W-0	R/W-0	R/W-0	R/W-0	R/W-0	R/W-0	R/W-0
	CHDSA[23:16]							
15:8	R/W-0	R/W-0	R/W-0	R/W-0	R/W-0	R/W-0	R/W-0	R/W-0
	CHDSA[15:8]							
7:0	R/W-0	R/W-0	R/W-0	R/W-0	R/W-0	R/W-0	R/W-0	R/W-0
	CHDSA[7:0]							

Legend:			
R = Readable bit	W = Writable bit	U = Unimplemented bit, read as '0'	
-n = Value at POR	'1' = Bit is set	'0' = Bit is cleared	x = Bit is unknown

bit 31-0 **CHDSA[31:0]:** Channel Destination Start Address bits

Note: This must be the physical address of the destination.

 © 2020 Microchip Technology Inc.

REGISTER 10-12: DCHxSSIZ: DMA CHANNEL x SOURCE SIZE REGISTER

Bit Range	Bit 31/23/15/7	Bit 30/22/14/6	Bit 29/21/13/5	Bit 28/20/12/4	Bit 27/19/11/3	Bit 26/18/10/2	Bit 25/17/9/1	Bit 24/16/8/0
31:24	U-0	U-0	U-0	U-0	U-0	U-0	U-0	U-0
	—	—	—	—	—	—	—	—
23:16	U-0	U-0	U-0	U-0	U-0	U-0	U-0	U-0
	—	—	—	—	—	—	—	—
15:8	R/W-0	R/W-0	R/W-0	R/W-0	R/W-0	R/W-0	R/W-0	R/W-0
	CHSSIZ[15:8]							
7:0	R/W-0	R/W-0	R/W-0	R/W-0	R/W-0	R/W-0	R/W-0	R/W-0
	CHSSIZ[7:0]							

Legend:			
R = Readable bit	W = Writable bit	U = Unimplemented bit, read as '0'	
-n = Value at POR	'1' = Bit is set	'0' = Bit is cleared	x = Bit is unknown

bit 31-16 **Unimplemented:** Read as '0'

bit 15-0 **CHSSIZ[15:0]:** Channel Source Size bits

1111111111111111 = 65,535 byte source size

•

•

•

0000000000000010 = 2 byte source size

0000000000000001 = 1 byte source size

0000000000000000 = 65,536 byte source size

REGISTER 10-13: DCHxDSIZ: DMA CHANNEL x DESTINATION SIZE REGISTER

Bit Range	Bit 31/23/15/7	Bit 30/22/14/6	Bit 29/21/13/5	Bit 28/20/12/4	Bit 27/19/11/3	Bit 26/18/10/2	Bit 25/17/9/1	Bit 24/16/8/0
31:24	U-0	U-0	U-0	U-0	U-0	U-0	U-0	U-0
	—	—	—	—	—	—	—	—
23:16	U-0	U-0	U-0	U-0	U-0	U-0	U-0	U-0
	—	—	—	—	—	—	—	—
15:8	R/W-0	R/W-0	R/W-0	R/W-0	R/W-0	R/W-0	R/W-0	R/W-0
	CHDSIZ[15:8]							
7:0	R/W-0	R/W-0	R/W-0	R/W-0	R/W-0	R/W-0	R/W-0	R/W-0
	CHDSIZ[7:0]							

Legend:			
R = Readable bit	W = Writable bit	U = Unimplemented bit, read as '0'	
-n = Value at POR	'1' = Bit is set	'0' = Bit is cleared	x = Bit is unknown

bit 31-16 **Unimplemented:** Read as '0'

bit 15-0 **CHDSIZ[15:0]:** Channel Destination Size bits

1111111111111111 = 65,535 byte destination size

•

•

•

0000000000000010 = 2 byte destination size

0000000000000001 = 1 byte destination size

0000000000000000 = 65,536 byte destination size

REGISTER 10-14: DCHxSPTR: DMA CHANNEL x SOURCE POINTER REGISTER

Bit Range	Bit 31/23/15/7	Bit 30/22/14/6	Bit 29/21/13/5	Bit 28/20/12/4	Bit 27/19/11/3	Bit 26/18/10/2	Bit 25/17/9/1	Bit 24/16/8/0
31:24	U-0	U-0	U-0	U-0	U-0	U-0	U-0	U-0
	—	—	—	—	—	—	—	—
23:16	U-0	U-0	U-0	U-0	U-0	U-0	U-0	U-0
	—	—	—	—	—	—	—	—
15:8	R-0	R-0	R-0	R-0	R-0	R-0	R-0	R-0
	CHSPTR[15:8]							
7:0	R-0	R-0	R-0	R-0	R-0	R-0	R-0	R-0
	CHSPTR[7:0]							

Legend:		
R = Readable bit	W = Writable bit	U = Unimplemented bit, read as '0'
-n = Value at POR	'1' = Bit is set	'0' = Bit is cleared x = Bit is unknown

bit 31-16 **Unimplemented:** Read as '0'

bit 15-0 **CHSPTR[15:0]:** Channel Source Pointer bits

1111111111111111 = Points to byte 65,535 of the source

.

.

.

0000000000000001 = Points to byte 1 of the source

0000000000000000 = Points to byte 0 of the source

Note: When in Pattern Detect mode, this register is reset on a pattern detect.

REGISTER 10-15: DCHxDPTR: DMA CHANNEL x DESTINATION POINTER REGISTER

Bit Range	Bit 31/23/15/7	Bit 30/22/14/6	Bit 29/21/13/5	Bit 28/20/12/4	Bit 27/19/11/3	Bit 26/18/10/2	Bit 25/17/9/1	Bit 24/16/8/0
31:24	U-0	U-0	U-0	U-0	U-0	U-0	U-0	U-0
	—	—	—	—	—	—	—	—
23:16	U-0	U-0	U-0	U-0	U-0	U-0	U-0	U-0
	—	—	—	—	—	—	—	—
15:8	R-0	R-0	R-0	R-0	R-0	R-0	R-0	R-0
	CHDPTR[15:8]							
7:0	R-0	R-0	R-0	R-0	R-0	R-0	R-0	R-0
	CHDPTR[7:0]							

Legend:		
R = Readable bit	W = Writable bit	U = Unimplemented bit, read as '0'
-n = Value at POR	'1' = Bit is set	'0' = Bit is cleared x = Bit is unknown

bit 31-16 **Unimplemented:** Read as '0'

bit 15-0 **CHDPTR[15:0]:** Channel Destination Pointer bits

1111111111111111 = Points to byte 65,535 of the destination

.

.

.

0000000000000001 = Points to byte 1 of the destination

0000000000000000 = Points to byte 0 of the destination

 © 2020 Microchip Technology Inc.

REGISTER 10-16: DCHxCSIZ: DMA CHANNEL x CELL-SIZE REGISTER

Bit Range	Bit 31/23/15/7	Bit 30/22/14/6	Bit 29/21/13/5	Bit 28/20/12/4	Bit 27/19/11/3	Bit 26/18/10/2	Bit 25/17/9/1	Bit 24/16/8/0
31:24	U-0	U-0	U-0	U-0	U-0	U-0	U-0	U-0
	—	—	—	—	—	—	—	—
23:16	U-0	U-0	U-0	U-0	U-0	U-0	U-0	U-0
	—	—	—	—	—	—	—	—
15:8	R/W-0	R/W-0	R/W-0	R/W-0	R/W-0	R/W-0	R/W-0	R/W-0
	CHCSIZ[15:8]							
7:0	R/W-0	R/W-0	R/W-0	R/W-0	R/W-0	R/W-0	R/W-0	R/W-0
	CHCSIZ[7:0]							

Legend:			
R = Readable bit	W = Writable bit	U = Unimplemented bit, read as '0'	
-n = Value at POR	'1' = Bit is set	'0' = Bit is cleared	x = Bit is unknown

bit 31-16 **Unimplemented:** Read as '0'

bit 15-0 **CHCSIZ[15:0]:** Channel Cell-Size bits

1111111111111111 = 65,535 bytes transferred on an event
.
.
.
0000000000000010 = 2 bytes transferred on an event
0000000000000001 = 1 byte transferred on an event
0000000000000000 = 65,536 bytes transferred on an event

REGISTER 10-17: DCHxCPTR: DMA CHANNEL x CELL POINTER REGISTER

Bit Range	Bit 31/23/15/7	Bit 30/22/14/6	Bit 29/21/13/5	Bit 28/20/12/4	Bit 27/19/11/3	Bit 26/18/10/2	Bit 25/17/9/1	Bit 24/16/8/0
31:24	U-0	U-0	U-0	U-0	U-0	U-0	U-0	U-0
	—	—	—	—	—	—	—	—
23:16	U-0	U-0	U-0	U-0	U-0	U-0	U-0	U-0
	—	—	—	—	—	—	—	—
15:8	R-0	R-0	R-0	R-0	R-0	R-0	R-0	R-0
	CHCPTR[15:8]							
7:0	R-0	R-0	R-0	R-0	R-0	R-0	R-0	R-0
	CHCPTR[7:0]							

Legend:			
R = Readable bit	W = Writable bit	U = Unimplemented bit, read as '0'	
-n = Value at POR	'1' = Bit is set	'0' = Bit is cleared	x = Bit is unknown

bit 31-16 **Unimplemented:** Read as '0'

bit 15-0 **CHCPTR[15:0]:** Channel Cell Progress Pointer bits

1111111111111111 = 65,535 bytes have been transferred since the last event
.
.
.
0000000000000001 = 1 byte has been transferred since the last event
0000000000000000 = 0 bytes have been transferred since the last event

Note: When in Pattern Detect mode, this register is reset on a pattern detect.

REGISTER 10-18: DCHxDAT: DMA CHANNEL x PATTERN DATA REGISTER

Bit Range	Bit 31/23/15/7	Bit 30/22/14/6	Bit 29/21/13/5	Bit 28/20/12/4	Bit 27/19/11/3	Bit 26/18/10/2	Bit 25/17/9/1	Bit 24/16/8/0
31:24	U-0	U-0	U-0	U-0	U-0	U-0	U-0	U-0
	—	—	—	—	—	—	—	—
23:16	U-0	U-0	U-0	U-0	U-0	U-0	U-0	U-0
	—	—	—	—	—	—	—	—
15:8	R/W-0	R/W-0	R/W-0	R/W-0	R/W-0	R/W-0	R/W-0	R/W-0
	CHPDAT[15:8]							
7:0	R/W-0	R/W-0	R/W-0	R/W-0	R/W-0	R/W-0	R/W-0	R/W-0
	CHPDAT[7:0]							

Legend:			
R = Readable bit	W = Writable bit	U = Unimplemented bit, read as '0'	
-n = Value at POR	'1' = Bit is set	'0' = Bit is cleared	x = Bit is unknown

bit 31-16 **Unimplemented:** Read as '0'

bit 15-0 **CHPDAT[15:0]:** Channel Data Register bits

Pattern Terminate mode:
Data to be matched must be stored in this register to allow terminate on match.

All other modes:
Unused.

 © 2020 Microchip Technology Inc.

11.0 OSCILLATOR CONFIGURATION

Note: This data sheet summarizes the features of the PIC32MZ W1 family of devices. It is not intended to be a comprehensive reference source. To complement the information in this data sheet, refer to **Section 42. "Oscillators with Enhanced PLL"** (DS60001250) in the *"PIC32 Family Reference Manual"*, which is available from the Microchip web site (www.microchip.com/PIC32).

The PIC32MZ W1 oscillator system has the following modules and features:

- Four external and internal oscillator options as clock sources
- Four on-chip PLLs with user-selectable input divider, multiplier and output divider to boost operating frequency on select internal and external oscillator sources
- On-chip user-selectable divisor postscaler on select oscillator sources
- Software-controllable switching between various clock sources
- Dedicated on-chip PLL for USB, Wi-Fi/Ethernet and Bluetooth modules
- Flexible reference clock output
- Multiple clock branches for peripherals for better performance flexibility
- Clock switch/slew control with output divider

A block diagram of the oscillator system is shown in Figure 11-1. The clock distribution is provided in Table 11-1.

FIGURE 11-1: PIC32MZ W1 FAMILY OSCILLATOR DIAGRAM

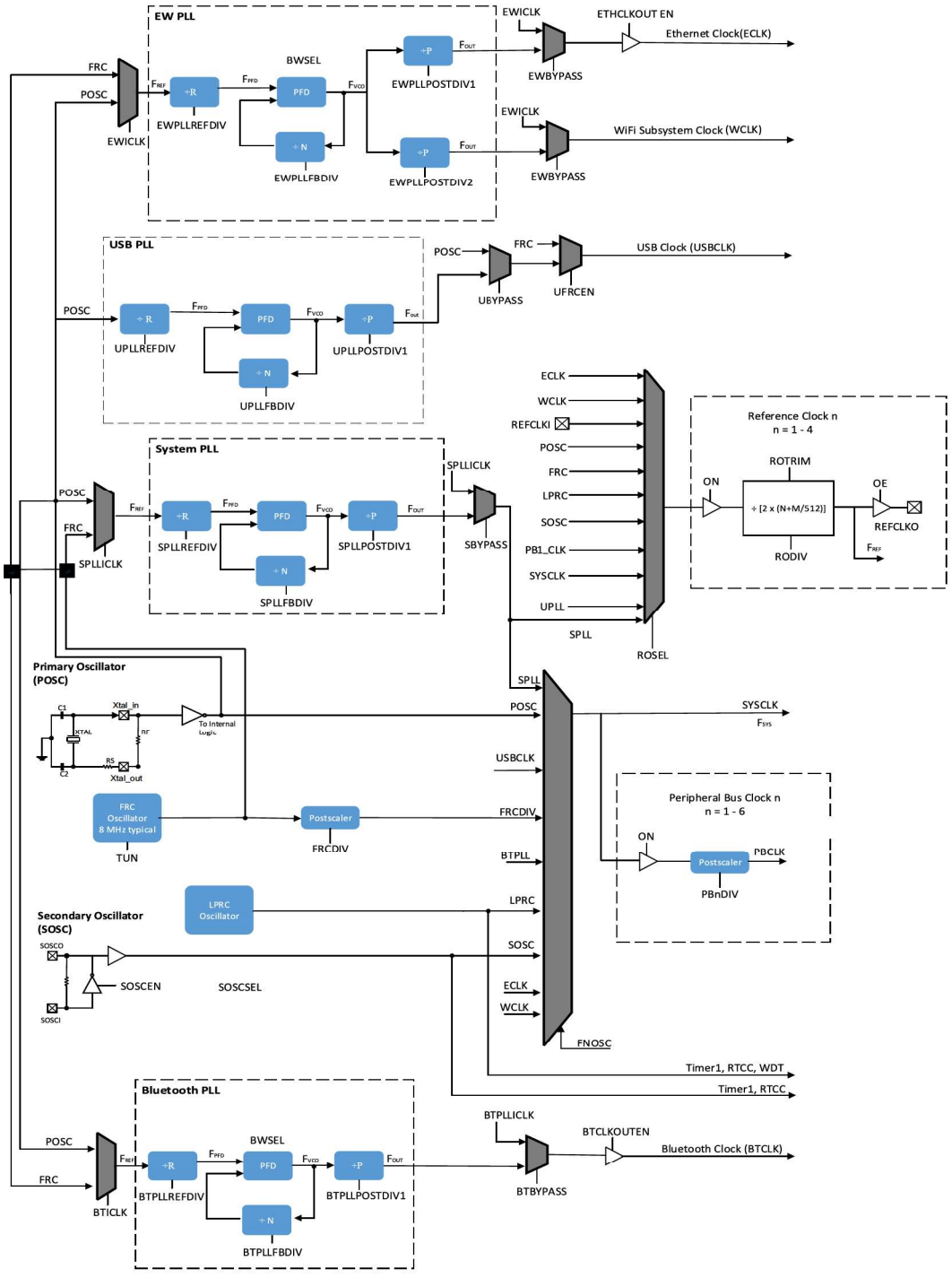

Notes:
1. A series resistor, RS, may be required for AT strip cut crystals, or to eliminate clipping.
2. The internal feedback resistor, RF, is typically1 MΩ.
3. Refer to *Oscillators with Enhanced PLL* (DS60001250) in the "*PIC32 Family Reference Manual*" for help in determining the best oscillator components.
4. Refer to **41.0 "Packaging Information"** for frequency limitations.

 © 2020 Microchip Technology Inc.

TABLE 11-1: SYSTEM AND PERIPHERAL CLOCK DISTRIBUTION

Peripheral	Clock Source																	
	BTPLL	ETHPLL	FRC	LPRC	PB1_CLK	PB2_CLK	PB3_CLK	PB4_CLK	PB5_CLK	PB6_CLK	POSC	REFO1	REFO2	REFO3	REFO4	SOSC	SYSCLK	UPLL
ADC			X											X			X	
Asymmetric Crypto									X									
BOR					X													
BT-CLKOUT	X																	
CAN						X												
CAN-FD		X				X												
CPU										X								
CVD			X	X		X						X						
DMA																	X	
DMT					X													
DSCON								X										
DSWDT				X												X		
Ethernet		X					X											
EVIC																	X	
Flash Controller			X		X													
I2C1						X												
I2C2							X											
ICAP1							X											
ICAP2							X											
ICAP3							X											
ICAP4							X											
ICD																	X	
OCMP1							X											
OCMP2							X											
OCMP3							X											
OCMP4							X											
PMU			X								X							
PORT A						X												
PORT B						X												
PORT C						X												
PORT K						X												
PPS					X													
Prefetch Cache																	X	
PTG			X		X									X			X	
RTCC				X				X								X		
SPI1							X					X						
SPI2							X					X						

TABLE 11-1: SYSTEM AND PERIPHERAL CLOCK DISTRIBUTION (CONTINUED)

Peripheral	Clock Source																	
	BTPLL	ETHPLL	FRC	LPRC	PB1_CLK	PB2_CLK	PB3_CLK	PB4_CLK	PB5_CLK	PB6_CLK	POSC	REFO1	REFO2	REFO3	REFO4	SOSC	SYSCLK	UPLL
SQI								X					X					
Symmetric Crypto									X									
Timer 1				X												X		
Timer 2					X													
Timer 3					X													
Timer 4					X													
Timer 5					X													
Timer 6					X													
Timer 7					X													
UART1			X				X					X		X			X	
UART2			X				X					X					X	
UART3			X		X							X					X	
USB							X											X
WDT				X	X													
Wi-Fi®		X	X	X				X			X					X		
TRNG									X									

 © 2020 Microchip Technology Inc.

11.1 Oscillator Control Registers

TABLE 11-2: OSCILLATOR CONFIGURATION REGISTER MAP

Virtual Address (BF80_#)	Register Name(1)	Bit Range	Bits																All Resets
			31/15	30/14	29/13	28/12	27/11	26/10	25/9	24/8	23/7	22/6	21/5	20/4	19/3	18/2	17/1	16/0	
1200	OSCCON	31:16	—	—	—	—	—	FRCDIV[2:0]			DRMEN	—	WAKE2SPD	—	—	—	—	—	0000
		15:0	COSC[3:0]				NOSC[3:0]				CLKLOCK	—	—	SLPEN	CF	UFRCEN	SOSCEN	OSWEN	0000
1210	OSCTUN	31:16	—	—	—	—	—	—	—	—	—	—	—	—	—	—	—	—	0000
		15:0	—	—	—	—	—	—	—	—	—	—	TUN[5:0]						0000
1220	SPLLCON	31:16	SPLL_BYP	SPLLICLK	—	—	SPLLREFDIV[5:0]						SPLLFBDIV[9:0]						0000
		15:0	SPLLFBDIV[9:0]				SPLLRST	SPLL-FLOCK	SPLLPOSTDIV1[5:0]						SPLLPWDN	SPLLBSWSEL[2:0]			0000
1230	UPLLCON	31:16	UPLL_BYP	—	—	—	UPLLREFDIV[5:0]						UPLLFBDIV[9:0]						0000
		15:0	UPLLFBDIV[9:0]				UPLLRST	UPLL-FLOCK	UPLLPOSTDIV1[5:0]						UPLLPWDN	UPLLBSWSEL[2:0]			0000
1240	BTPLLCON	31:16	BTPLL_BYP	BTPLLICLK	—	BTCLKOUTEN	BTPLLREFDIV[5:0]						BTPLLFBDIV[9:0]						0000
		15:0	BTPLLFBDIV[9:0]				BTPLLRST	BTPLL-FLOCK	BTPLLPOSTDIV1[5:0]						BTPLLPWDN	BTPLLBSWSEL[2:0]			0000
1250	EWPLLCON	31:16	EWPLL_BYP	EWPLLICLK	—	ETHCLKOUTEN	EWPLLREFDIV[5:0]						EWPLLFBDIV[9:0]						0000
		15:0	EWPLLFBDIV[9:0]				EWPLLRST	EWPLL-FLOCK	EWPLLPOSTDIV1[5:0]						EWPLLPWDN	EWPLLBSWSEL[2:0]			0000
12A0	REFO1CON	31:16	—	RODIV[14:0]															0000
		15:0	ON	—	SIDL	OE	RSLP	—	DIVSWEN	ACTIVE	—	—	—	—	RCSEL[3:0]				0000
12B0	REFO1TRIM	31:16	ROTRIM[8:0]									—	—	—	—	—	—	—	0000
		15:0	—	—	—	—	—	—	—	—	—	—	—	—	—	—	—	—	0000
12C0	REFO2CON	31:16	—	RODIV[14:0]															0000
		15:0	ON	—	SIDL	OE	RSLP	—	DIVSWEN	ACTIVE	—	—	—	—	RCSEL[3:0]				0000
12D0	REFO2TRIM	31:16	ROTRIM[8:0]									—	—	—	—	—	—	—	0000
		15:0	—	—	—	—	—	—	—	—	—	—	—	—	—	—	—	—	0000
12E0	REFO3CON	31:16	—	RODIV[14:0]															0000
		15:0	ON	—	SIDL	OE	RSLP	—	DIVSWEN	ACTIVE	—	—	—	—	RCSEL[3:0]				0000
12F0	REFO3TRIM	31:16	ROTRIM[8:0]									—	—	—	—	—	—	—	0000
		15:0	—	—	—	—	—	—	—	—	—	—	—	—	—	—	—	—	0000
1300	REFO4CON	31:16	—	RODIV[14:0]															0000
		15:0	ON	—	SIDL	OE	RSLP	—	DIVSWEN	ACTIVE	—	—	—	—	RCSEL[3:0]				0000
1310	REFO4TRIM	31:16	ROTRIM[8:0]									—	—	—	—	—	—	—	0000
		15:0	—	—	—	—	—	—	—	—	—	—	—	—	—	—	—	—	0000
1320	PB1DIV	31:16	—	—	—	—	—	—	—	—	—	—	—	—	—	—	—	—	0000
		15:0	PB1DIVON	—	—	—	PBDIVRDY	—	—	—	—	PBDIV[6:0]							0000

Legend: x = unknown value on Reset; — = unimplemented, read as '0'. Reset values are shown in hexadecimal.

Note 1: All registers in this table have corresponding CLR, SET, and INV registers at their virtual addresses, plus offsets of 0x4, 0x8 and 0xC, respectively. See **Section 13.3 "CLR, SET, and INV Registers"** for more information.

2: Reset values are dependent on the CFGCONx Configuration bits and the type of Reset.

© 2020 Microchip Technology Inc.

TABLE 11-2: OSCILLATOR CONFIGURATION REGISTER MAP (CONTINUED)

Virtual Address (BF80_#)	Register Name(1)	Bit Range	Bits																All Resets
			31/15	30/14	29/13	28/12	27/11	26/10	25/9	24/8	23/7	22/6	21/5	20/4	19/3	18/2	17/1	16/0	
1330	PB2DIV	31:16	—	—	—	—	—	—	—	—	—	—	—	—	—	—	—	—	0000
		15:0	PB2DIVON	—	—	—	PBDIVRDY	—	—	—	—	PBDIV[6:0]							0000
1340	PB3DIV	31:16	—	—	—	—	—	—	—	—	—	—	—	—	—	—	—	—	0000
		15:0	PB3DIVON	—	—	—	PBDIVRDY	—	—	—	—	PBDIV[6:0]							0000
1350	PB4DIV	31:16	—	—	—	—	—	—	—	—	—	—	—	—	—	—	—	—	0000
		15:0	PB4DIVON	—	—	—	PBDIVRDY	—	—	—	—	PBDIV[6:0]							0000
1360	PB5DIV	31:16	—	—	—	—	—	—	—	—	—	—	—	—	—	—	—	—	0000
		15:0	PB5DIVON	—	—	—	PBDIVRDY	—	—	—	—	PBDIV[6:0]							0000
1370	PB6DIV	31:16	—	—	—	—	—	—	—	—	—	—	—	—	—	—	—	—	0000
		15:0	PB6DIVON	—	—	—	PBDIVRDY	—	—	—	—	PBDIV[6:0]							0000
1380	SLEWCON	31:16	—	—	—	—	SLWDLY[3:0]				—	—	—	—	SYSDIV[3:0]				0000
		15:0	—	—	—	—	—	SLWDIV[2:0]			—	—	—	—	—	UPEN	DNEN	BUSY	0000
1390	CLKSTAT	31:16	—	—	—	—	—	—	—	—	—	—	—	—	—	—	—	—	0000
		15:0	—	—	—	—	SYSCLKRDY	PB1-CLKRDY	SPLLAL-TRDY	WIFI-CLKRDY	ETHPLL-RDY	BTPLLRDY	LPRC RDY	SOSC RDY	UPLLRDY	POSC RDY	SPLL DIVRDY	FRCRDY	0000
13A0	OSCCON-BAR	31:16	—	—	—	—	—	—	—	—	—	—	—	—	—	—	—	—	0000
		15:0	—	—	—	—	—	—	—	—	—	—	—	—	—	—	—	—	0000
13B0	CLKDIAG	31:16	—	—	—	—	—	—	—	—	—	—	—	—	—	—	—	—	0000
		15:0	—	—	—	—	—	—	—	—	—	ETHPLL-STOP	UPLLSTOP	SPLL-STOP	LPRCSTOP	FRC-STOP	SOSC-STOP	POSC-STOP	0000

Legend: x = unknown value on Reset; — = unimplemented, read as '0'. Reset values are shown in hexadecimal.

Note 1: All registers in this table have corresponding CLR, SET, and INV registers at their virtual addresses, plus offsets of 0x4, 0x8 and 0xC, respectively. See **Section 13.3 "CLR, SET, and INV Registers"** for more information.

2: Reset values are dependent on the CFGCONx Configuration bits and the type of Reset.

© 2020 Microchip Technology Inc.

REGISTER 11-1: OSCCON: CRU OSCILLATOR CONTROL REGISTER

Bit Range	Bit 31/23/15/7	Bit 30/22/14/6	Bit 29/21/13/5	Bit 28/20/12/4	Bit 27/19/11/3	Bit 26/18/10/2	Bit 25/17/9/1	Bit 24/16/8/0
31:24	U-0	U-0	U-0	U-0	U-0	R/W/L-0	R/W/L-0	R/W/L-0
	—	—	—	—	—	FRCDIV[2:0]		
23:16	R/W/L-0	U-0	R/W/L-1	U-0	U-0	U-0	U-0	U-0
	DRMEN	—	2SPDSLP	—	—	—	—	—
15:8	R/W/L-0	R/W/L-0	R/W/L-0	R/W/L-0	R/W/L-0	R/W/L-0	R/W/L-0	R/W/L-0
	COSC[3:0]				NOSC[3:0]			
7:0	R/W/L-0	U-0	U-0	R/W/L-0	R/W/HS/L-0	R/W/L-1	R/W/L-1	R/W/HC/L-1
	CLKLOCK	—	—	SLPEN	CF	UFRCEN	SOSCEN	OSWEN

Legend:	HC = Hardware Cleared		HS = Hardware Set
R = Readable bit	W = Writable bit	U = Unimplemented bit, read as '0'	
-n = Value at POR	'1' = Bit is set	'0' = Bit is cleared	x = Bit is unknown
L = Value set from Configuration bits on POR			

bit 31-27 **Unimplemented:** Read as '0'

bit 26-24 **FRCDIV[2:0]:** Fast RC Clock Divider bits
- 000 = FRC divided by 1 (default value)
- 001 = FRC divided by 2
- 010 = FRC divided by 4
- 011 = FRC divided by 8
- 100 = FRC divided by 16
- 101 = FRC divided by 32
- 110 = FRC divided by 64
- 111 = FRC divided by 256

bit 23 **DRMEN:** Enable Dream Mode bit
- 1 = When SLPEN = 1, DMA transfer complete causes Sleep mode to be entered
- 0 = DMA transfer has no effect

bit 22 **Unimplemented:** Read as '0'

bit 21 **WAKE2SPD:** 2-Speed startup enabled in Sleep mode bit
- 1 = When the device exits Sleep mode, the SYS_CLK is from FRC until the selected clock is ready
- 0 = When the device exits Sleep mode, the SYS_CLK is from the selected clock

bit 20-16 **Unimplemented:** Read as '0'

bit 15-12 **COSC[3:0]:** Current Oscillator Selection bits (Read-only)
- 0000 = Fast RC Oscillator (FRC) divided by OSCCON.FRCDIV (supports FRC/16 and FRC/1)
- 0001 = System PLL (SPLL module) (input clock and divider set by SPLLCON)
- 0010 = Primary Oscillator (POSC)
- 0011 = USB PLL (UPLL module) (input clock and divider set by UPLLCON)
- 0100 = Secondary Oscillator (SOSC)
- 0101 = Low-Power RC Oscillator (LPRC)
- 0110 = BT PLL (input clock and divider set by BTPLLCON)
- 0111 = EWPLL Ethernet clock (input clock and divider set by EWPLLCON)
- 1000 = EWPLL Wi-Fi clock (input clock and divider set by EWPLLCON)

Note 1: Loaded with NOSC[3:0] at the completion of a successful clock switch.

2: Set to FRC value (0000) when FSCM detects a failure and switches clock to FRC.

Note: The system unlock sequence must be done before this register can be written.

REGISTER 11-1: OSCCON: CRU OSCILLATOR CONTROL REGISTER (CONTINUED)

bit 11-8 **NOSC[3:0]:** New Oscillator Selection bits
0000 = FRC divided by OSCCON. FRCDIV (supports FRC/16 and FRC/1)
0001 = SPLL module (input clock and divider set by SPLLCON)
0010 = POSC
0011 = UPLL mode (input clock divider set by UPLLCON), was POSC with PLL
0100 = SOSC
0101 = LPRC
0110 = BT PLL (input clock and divider set by BTPLLCON)
0111 = EWPLL Ethernet clock (input clock and divider set by EWPLLCON)
1000 = EWPLL Wi-Fi clock (input clock and divider set by EWPLLCON)

bit 7 **CLKLOCK:** Clock Lock Enabled bit
1 = All clock and PLL configuration registers are locked. These include OSCCON, OSCTRIM, SPLLCON, UPLLCON, and PBxDIV.
0 = Clock and PLL selection registers are not locked, configurations may be modified

Note 1: Once set, this bit can only be cleared via a device Reset.
2: When active, this bit prevents writes to the following registers: NOSC[3:0], and OSWEN.

bit 6-5 **Unimplemented:** Read as '0'

bit 4 **SLPEN:** Enable Sleep Mode bit
1 = When a WAIT instruction is executed, device enters Sleep mode
0 = When a WAIT instruction is executed, device enters Idle mode

bit 3 **CF:** Clock Fail Detect bit (readable/writable/clearable by application)
1 = FSCM detects clock failure
0 = FSCM does not detect clock failure

Note 1: Writing a '1' to this bit causes a clock switching sequence to be initiated by the clock switch state machine.
2: Reset when a valid clock switching sequence is initiated by the clock switch state machine.
3: This bit is set when clock fail event detected.

bit 2 **UFRCEN:** USB FRC Clock Enable bit
1 = Enable FRC as the clock source for the USB clock source
0 = Use the primary oscillator or UPLL as the USB clock source

bit 1 **SOSCEN:** 32 kHz Secondary (LP) Oscillator Enable bit
1 = Enable SOSC
0 = Disable SOSC

bit 0 **OSWEN:** Oscillator Switch Enable bit
1 = Request oscillator switch to selection specified by NOSC[3:0] bits
0 = Oscillator switch is complete

Note 1: A Write of value '0' has no effect.
2: This bit is cleared by hardware after a successful clock switch; after redundant clock switch (NOSC = COSC) and when FSCM switches the oscillator to Fail-Safe Clock Source (FRC).

Note: The system unlock sequence must be done before this register can be written.

 © 2020 Microchip Technology Inc.

REGISTER 11-2: OSCTUN: FRC TUNING REGISTER

Bit Range	Bit 31/23/15/7	Bit 30/22/14/6	Bit 29/21/13/5	Bit 28/20/12/4	Bit 27/19/11/3	Bit 26/18/10/2	Bit 25/17/9/1	Bit 24/16/8/0
31:24	U-0	U-0	U-0	U-0	U-0	U-0	U-0	U-0
	—	—	—	—	—	—	—	—
23:16	U-0	R-0	U-0	U-0	U-0	U-0	U-0	U-0
	—	—	—	—	—	—	—	—
15:8	U-0	R-0	U-0	U-0	U-0	U-0	U-0	U-0
	—	—	—	—	—	—	—	—
7:0	U-0	U-0	R/W/L-0					
	—	—	TUN[5:0]					

Legend:	L = Value set from Configuration bits on POR		
R = Readable bit	W = Writable bit	U = Unimplemented bit, read as '0'	
-n = Value at POR	'1' = Bit is set	'0' = Bit is cleared	x = Bit is unknown

bit 31-6 **Unimplemented:** Read as '0'

bit 5-0 **TUN[5:0]:** Internal FRC Oscillator Tuning bits

This bit field specifies the user tuning capability for the internal FRC oscillator.

011111 = Center frequency +2%
011110 =
•
•
•
000001 =
000000 = Center frequency, oscillator is running at calibrated frequency (8MHz)
111111 =
111110 =
•
•
•
100001 =
100000 = Center frequency -2%

Note 1: The system unlock sequence must be done before this register can be written.

2: OSCTUN functionality has been provided to help customers compensate for temperature effects on the FRC frequency over a wide range of temperatures. The tuning step size is an approximation, and is neither characterized nor tested.

REGISTER 11-3: SPLLCON: SPLL CONTROL REGISTER

Bit Range	Bit 31/23/15/7	Bit 30/22/14/6	Bit 29/21/13/5	Bit 28/20/12/4	Bit 27/19/11/3	Bit 26/18/10/2	Bit 25/17/9/1	Bit 24/16/8/0
31:24	R/W/L-1	R/W/L-1	U-0	U-0	R/W-0	R/W/L-0	R/W-0	R/W-0
	SPLL_BYP	SPLLICLK	—	—	SPLLREFDIV[5:2]			
23:16	R/W/L-0	R/W/L-0	R/W/L-0	R/W/L-0	R/W/L-0	R/W/L-0	R/W/L-0	R/W/L-0
	SPLLREFDIV[1:0]		SPLLFBDIV[9:4]					
15:8	R/W/L-0	R/W/L-0	R/W/L-0	R/W/L-0	R/W/L-1	R/W/L-0	R/W/L-0	R/W/L-0
	SPLLFBDIV[3:0]				SPLLRST	SPLLFLOCK	SPLLPOSTDIV1[5-4]	
7:0	R/W/L-0	R/W/L-0	R/W/L-0	R/W/L-0	R/W/L-1	R/W/L-0	R/W/L-0	R/W/L-0
	SPLLPOSTDIV1[3:0]				SPLLPWDN	SPLLBSWSEL[2:0]		

Legend:	L = Value set from Configuration bits on POR		
R = Readable bit	W = Writable bit	U = Unimplemented bit, read as '0'	
-n = Value at POR	'1' = Bit is set	'0' = Bit is cleared	x = Bit is unknown

bit 31 **SPLL_BYP:** SPLL Bypass bit; when this bit is set, the input clock REF bypasses PLL to PLLOUTx.

Note: Recommendation is to setup SPLL first before setting up other PLLs especially when using SYS-PLL for generating main system clock. Reset value must be 1, because PLL needs setup in SW for generating desired frequency.

bit 30 **SPLLICLK:** Source Input Clock Selection bit:

0 = POSC is the SPLL input clock source
1 = FRC is the SPLL input clock source

Note: The Reset value must be 1, because the POSC is not available upon Reset.

bit 29-28 **Unimplemented:** Read as '0'

bit 27-22 **SPLLREFDIV[5:0]:** Reference Frequency Divide bit,1 ? SPLLDIVR ? 63, value of 0 is unused.

bit 21-12 **SPLLFBDIV[9:0]:** PLL Feedback Divider bit, 16 ? SPLLFBDIV ? 1023, values of 0 to 15 are unused.

bit 11 **SPLLRST:** System PLL Reset bit

1 = Assert the Reset to the SPLL
0 = De-assert the Reset to the SPLL

bit 10 **SPLLFLOCK:** System PLL Force Lock bit

1 = Force the SPLL lock signal to be asserted
0 = Do not force the SPLL lock signal to be asserted

bit 9-4 **SPLLPOSTDIV1[5:0]:** First Post Divide Value bit. 1 ? SPLLPOSTDIV1 ? 63, value of 0 is unused.

bit 3 **SPLLPWDN:** PLL Power Down Register bit

1 = PLL is powered down
0 = PLL is active

bit 2-0 **SPLLBSWSEL[2:0]:** PLL Bandwidth Select bit

Use the frequency range that matches the PLL closed loop bandwidth as based on the reference frequency divided by REFDIV to be set to allow the PLL loop filter to work with the post-reference divider frequency.

Note: The system unlock sequence must be done before this register can be written.

 © 2020 Microchip Technology Inc.

REGISTER 11-4: UPLLCON: UPLL CONTROL REGISTER

Bit Range	Bit 31/23/15/7	Bit 30/22/14/6	Bit 29/21/13/5	Bit 28/20/12/4	Bit 27/19/11/3	Bit 26/18/10/2	Bit 25/17/9/1	Bit 24/16/8/0
31:24	R/W/L-1	U-0	U-0	U-0	R/W-0	R/W/L-0	R/W-0	R/W-0
	UPLL_BYP	—	—	—	UPLLREFDIV[5:2]			
23:16	R/W/L-0	R/W/L-0	R/W/L-0	R/W/L-0	R/W/L-0	R/W/L-0	R/W/L-0	R/W/L-0
	UPLLREFDIV[1:0]		UPLLFBDIV[9:4]					
15:8	R/W/L-0	R/W/L-0	R/W/L-0	R/W/L-0	R/W/L-1	R/W/L-0	R/W/L-0	R/W/L-0
	UPLLFBDIV[3:0]				UPLLRST	UPLLFLOCK	UPLLPOSTDIV1[5-4]	
7:0	R/W/L-0	R/W/L-0	R/W/L-0	R/W/L-0	R/W/L-1	R/W/L-0	R/W/L-0	R/W/L-0
	UPLLPOSTDIV1[3:0]				USPLLPWDN	UPLLBSWSEL[2:0]		

Legend:	L = Value set from Configuration bits on POR		
R = Readable bit	W = Writable bit	U = Unimplemented bit, read as '0'	
-n = Value at POR	'1' = Bit is set	'0' = Bit is cleared	x = Bit is unknown

bit 31 **UPLL_BYP:** UPLL Bypass; when this bit is set, the input clock REF bypasses PLL to PLLOUTx.

Note: Recommendation is to setup SPLL first before setting up other PLLs especially when using SYS-PLL for generating main system clock. Reset value must be 1, because PLL needs setup in SW for generating desired frequency.

bit 30-28 **Unimplemented:** Read as '0'

bit 29-28 **Unimplemented:** Read as '0'

bit 27-22 **UPLLREFDIV[5:0]:** Reference Frequency Divide, 1 ? UPLLDIVR ? 63, value of 0 is unused.

bit 21-12 **UPLLFBDIV[9:0]:** PLL Feedback Divider, 16 ? UPLLFBDIV ? 1023, values of 0 to 15 are unused.

bit 11 **UPLLRST:** USB PLL Reset
1 = Assert the reset to the UPLL
0 = De-assert the reset to the UPLL

bit 10 **UPLLFLOCK:** USB PLL Force Lock
1 = Force the UPLL lock signal to be asserted
0 = Do not force the UPLL lock signal to be asserted

bit 9-4 **UPLLPOSTDIV1[5:0]:** First Post Divide Value, 1 ? UPLLPOSTDIV1 ? 63, value of 0 is unused.

bit 3 **UPLLPWDN:** PLL Power Down Register bit
1 = PLL is powered down
0 = PLL is active

bit 2-0 **UPLLBSWSEL[2:0]:** PLL Bandwidth Select

Use the frequency range that matches the PLL closed loop bandwidth as based on the reference frequency divided by REFDIV to be set to allow the PLL loop filter to work with the post-reference divider frequency.

Note: The system unlock sequence must be done before this register can be written.

REGISTER 11-5: BTPLLCON: BTPLL CONTROL REGISTER

Bit Range	Bit 31/23/15/7	Bit 30/22/14/6	Bit 29/21/13/5	Bit 28/20/12/4	Bit 27/19/11/3	Bit 26/18/10/2	Bit 25/17/9/1	Bit 24/16/8/0
31:24	R/W/L-1	R/W/L-1	U-0	R/W/L-0	R/W-0	R/W/L-0	R/W-0	R/W-0
	BTPLL_BYP	BTPLLICLK	—	BTCLKOUTEN	BTPLLREFDIV[5:2]			
23:16	R/W/L-0	R/W/L-0	R/W/L-0	R/W/L-0	R/W/L-0	R/W/L-0	R/W/L-0	R/W/L-0
	BTPLLREFDIV[1:0]		BTPLLFBDIV[9:4]					
15:8	R/W/L-0	R/W/L-0	R/W/L-0	R/W/L-0	R/W/L-1	R/W/L-0	R/W/L-0	R/W/L-0
	BTPLLFBDIV[3:0]				BTPLLRST	BTPLLFLOCK	BTPLLPOSTDIV1[5-4]	
7:0	R/W/L-0	R/W/L-0	R/W/L-0	R/W/L-0	R/W/L-1	R/W/L-0	R/W/L-0	R/W/L-0
	BTPLLPOSTDIV1[3:0]				BTPLLPWDN	BTPLLBSWSEL[2:0]		

Legend:	L = Value set from Configuration bits on POR		
R = Readable bit	W = Writable bit	U = Unimplemented bit, read as '0'	
-n = Value at POR	'1' = Bit is set	'0' = Bit is cleared	x = Bit is unknown

bit 31 **BTPLL_BYP:** BTPLL Bypass; when this bit is set, the input clock REF bypasses PLL to PLLOUTx.

Note: Recommendation is to setup SPLL first before setting up other PLLs especially when using SYS-PLL for generating main system clock. Reset value must be 1, because PLL needs setup in SW for generating desired frequency.

bit 30 **BTPLLICLK:** Source Input Clock Selection bit:

0 = POSC is the BTPLL input clock source
1 = FRC is the BTPLL input clock source

Note: The Reset value must be 1, because the POSC is not available upon Reset.

bit 29 **Unimplemented:** Read as '0'

bit 28 **BTCLKOUTEN:** BT Clock Out pin Enable bit

1 = BT_CLK_OUT Pin is enabled
0 = BT_CLK_OUT Pin is disabled

bit 27-22 **BTPLLREFDIV[5:0]:** Reference Frequency Divide, 1 ? BTPLLDIVR ? 63, value of 0 is unused.

bit 21-12 **BTPLLFBDIV[9:0]:** PLL Feedback Divider, 16 ? BTPLLFBDIV ? 1023, values of 0 to 15 are unused.

bit 11 **BTPLLRST:** BT PLL Reset

1 = Assert the reset to the BTPLL
0 = De-assert the reset to the BTPLL

bit 10 **BTPLLFLOCK:** BT PLL Force Lock

1 = Force the BTPLL lock signal to be asserted
0 = Do not force the BTPLL lock signal to be asserted

bit 9-4 **BTPLLPOSTDIV1[5:0]:** First Post Divide Value, 1 ? BTPLLPOSTDIV1 ? 63, value of 0 is unused.

bit 3 **BTPLLPWDN:** PLL Power Down Register bit

1 = PLL is powered down
0 = PLL is active

bit 2-0 **BTPLLBSWSEL[2:0]:** PLL Bandwidth Select

Use the frequency range that matches the PLL closed loop bandwidth as based on the reference frequency divided by REFDIV to be set to allow the PLL loop filter to work with the post-reference divider frequency.

Note: The system unlock sequence must be done before this register can be written.

 © 2020 Microchip Technology Inc.

REGISTER 11-6: EWPLLCON: EWPLL CONTROL REGISTER

Bit Range	Bit 31/23/15/7	Bit 30/22/14/6	Bit 29/21/13/5	Bit 28/20/12/4	Bit 27/19/11/3	Bit 26/18/10/2	Bit 25/17/9/1	Bit 24/16/8/0
31:24	R/W/L-1	R/W/L-1	U-0	R/W/L-0	R/W-0	R/W/L-0	R/W-0	R/W-0
	EWPLL_BYP	EWPLLICLK	—	ETHCLKOUTEN	EWPLLREFDIV[5:2]			
23:16	R/W/L-0	R/W/L-0	R/W/L-0	R/W/L-0	R/W/L-0	R/W/L-0	R/W/L-0	R/W/L-0
	EWPLLREFDIV[1:0]		EWPLLFBDIV[9:4]					
15:8	R/W/L-0	R/W/L-0	R/W/L-0	R/W/L-0	R/W/L-1	R/W/L-0	R/W/L-0	R/W/L-0
	EWPLLFBDIV[3:0]				EWPLLRST	EWPLLFLOCK	EWPLLPOSTDIV1[5-4]	
7:0	R/W/L-0	R/W/L-0	R/W/L-0	R/W/L-0	R/W/L-1	R/W/L-0	R/W/L-0	R/W/L-0
	EWPLLPOSTDIV1[3:0]				EWPLLPWDN	EWPLLBSWSEL[2:0]		

Legend:	L = Value set from Configuration bits on POR		
R = Readable bit	W = Writable bit	U = Unimplemented bit, read as '0'	
-n = Value at POR	'1' = Bit is set	'0' = Bit is cleared	x = Bit is unknown

bit 31 **EWPLL_BYP:** EWPLL Bypass; when this bit is set, the input clock REF bypasses PLL to PLLOUTx.

Note: Recommendation is to setup SPLL first before setting up other PLLs especially when using SYSPLL for generating main system clock. Reset value must be 1, because PLL needs setup in SW for generating desired frequency.

bit 30 **EWPLLICLK:** Source Input Clock Selection bit:
0 = POSC is the EWPLL input clock source
1 = FRC is the EWPLL input clock source

Note: The Reset value must be 1, because the POSC is not available upon Reset. For Wi-Fi operation this bit must be set to 0. For Ethernet when providing reference clock to external PHY this bit must be set to 0.

bit 29 **Unimplemented:** Read as '0'

bit 28 **ETHCLKOUTEN:** Ethernet Clock Out pin Enable bit
1 = ETH_CLK_OUT pin is enabled
0 = ETH_CLK_OUT pin is disabled

bit 27-22 **EWPLLREFDIV[5:0]:** Reference Frequency Divide, 1 ? EWPLLDIVR ? 63, value of 0 is unused.

bit 21-12 **EWPLLFBDIV[9:0]:** PLL Feedback Divider, 16 ? EWPLLFBDIV ? 1023, values of 0 to 15 are unused.

bit 11 **EWPLLRST:** EW PLL Reset
1 = Assert the reset to the EWPLL
0 = De-assert the reset to the EWPLL

bit 10 **EWPLLFLOCK:** EW PLL Force Lock
1 = Force the EWPLL lock signal to be asserted
0 = Do not force the EWPLL lock signal to be asserted

bit 9-4 **EWPLLPOSTDIV1[5:0]:** First Post Divide Value, 1 ? EWPLLPOSTDIV1 ? 63, value of 0 is unused.

bit 3 **EWPLLPWDN:** PLL Power Down Register bit
1 = PLL is powered down
0 = PLL is active

bit 2-0 **EWPLLBSWSEL[2:0]:** PLL Bandwidth Select

Use the frequency range that matches the PLL closed loop bandwidth as based on the reference frequency divided by REFDIV to be set to allow the PLL loop filter to work with the post-reference divider frequency.

Note: The system unlock sequence must be done before this register can be written.

REGISTER 11-7: REFOxCON: REFERENCE OSCILLATOR 1 CONTROL REGISTER (x = 1-4)

Bit Range	Bit 31/23/15/7	Bit 30/22/14/6	Bit 29/21/13/5	Bit 28/20/12/4	Bit 27/19/11/3	Bit 26/18/10/2	Bit 25/17/9/1	Bit 24/16/8/0
31:24	U-0	R/W-0	R/W-0	R/W-0	R/W-0	R/W-0	R/W-0	R/W-0
	—	RODIV[14:8]						
23:16	R/W-0	R/W-0	R/W-0	R/W-0	R/W-0	R/W-0	R/W-0	R/W-0
	RODIV[7:0]							
15:8	R/W-0	R/W-0	R/W-0	R/W-0	R/W-0	U-0	HC/ R/W-0	HS/HC/ R-0
	ON	—	SIDL	OE	RSLP	—	DIVSWEN	ACTIVE
7:0	U-0	U-0	U-0	U-0	R/W-0	R/W-0	R/W-0	R/W-0
	—	—	—	—	ROSEL[3:0]			

Legend:	HC = Hardware Cleared	HS = Hardware Set	
R = Readable bit	W = Writable bit	U = Unimplemented bit, read as '0'	
-n = Value at POR	'1' = Bit is set	'0' = Bit is cleared	x = Bit is unknown

bit 31 **Unimplemented:** Read as '0'
Reserved for expansion of RODIV[15]

bit 30-16 **RODIV[14:0]** Reference Clock Divider bits
Specifies 1/2 period of reference clock in the source clocks.
111111111111111 = REFO clock is base clock frequency divided by 65,534 (32,767 *2)
111111111111110 = REFO clock is base clock frequency divided by 65,532 (32,766 * 2)
•
•
•
000000000000011 = REFO clock is base clock frequency divided by 6 (3*2)
000000000000010 = REFO clock is base clock frequency divided by 4 (2*2)
000000000000001 = REFO clock is base clock frequency divided by 2 (1*2)
000000000000000 = REFO clock is same frequency as base clock (no divider)

bit 15 **ON:** Output Enable bit
1 = Reference oscillator module enabled
0 = Reference oscillator module disabled

bit 14 **Unimplemented:** Read as '0'

bit 13 **SIDL:** Peripheral Stop in Idle Mode bit
1 = Discontinue module operation when device enters Idle mode
0 = Continue module operation in Idle mode

bit 12 **OE:** Reference Clock Output Enable bit
1 = Reference clock is driven out on REFO pin
0 = Reference clock is not driven out on REFO pin

bit 11 **RSLP:** Reference Oscillator Run in Sleep bit
1 = Reference oscillator output continues to run in Sleep mode
0 = Reference oscillator output is disabled in Sleep mode
Note: This bit is ignored when ROSEL[3:0] = (0000 or 0001).

bit 10 **Unimplemented:** Read as '0'

bit 9 **DIVSWEN:** Clock RODIV/ROTRIM switch enabled
1 = Clock divider switching currently in progress
0 = Clock divider switching is completed

bit 8 **ACTIVE:** Reference Clock Request Status bit
1 = Reference clock request is active (user should not update this REFOCON register)
0 = Reference clock request is not active (user can update this REFOCON register)

bit 7-4 **Unimplemented:** Read as '0'

Note 1: REFOCON.ROSEL should not be written while the REFOCON.ACTIVE bit is "1" - undefined behavior will result.
2: REFOCON should not be written when REFOCON[ON] != REFOCON[ACTIVE] - undefined behavior will result..

 © 2020 Microchip Technology Inc.

REGISTER 11-7: REFOxCON: REFERENCE OSCILLATOR 1 CONTROL REGISTER (x = 1-4) (CONTINUED)

bit 3-0 **ROSEL[3:0]:** Reference Clock Source Select bits

Select one of various clock sources to be used as the reference clock.

1012 - 1111 = Reserved
1011 = REFI Pin
1010 = BTPLL clock(2)
1001 = EWPLL Wi-Fi clock
1000 = EWPLL Ethernet clock
0111 = System PLL
0110 = USB PLL
0101 = SOSC
0100 = LPRC
0011 = FRC
0010 = POSC
0001 = Peripheral clock (reference clock reflects any peripheral clock switching)
0000 = System clock (reference clock reflects any device clock switching)

Note 1: REFOCON.ROSEL should not be written while the REFOCON.ACTIVE bit is “1” - undefined behavior will result.
2: REFOCON should not be written when REFOCON[ON] != REFOCON[ACTIVE] - undefined behavior will result..

REGISTER 11-8: REFOxTRIM: REFERENCE OSCILLATOR 1 TRIM REGISTER (x = 1-4)

Bit Range	Bit 31/23/15/7	Bit 30/22/14/6	Bit 29/21/13/5	Bit 28/20/12/4	Bit 27/19/11/3	Bit 26/18/10/2	Bit 25/17/9/1	Bit 24/16/8/0
31:24	R/W-0	R/W-0	R/W-0	R/W-0	R/W-0	R/W-0	R/W-0	R/W-0
	ROTRIM[8:1]							
23:16	R/W-0	U-0	U-0	U-0	U-0	U-0	U-0	U-0
	ROTRIM[0]	—	—	—	—	—	—	—
15:8	U-0	R-0	U-0	U-0	U-0	U-0	U-0	U-0
	—	—	—	—	—	—	—	—
7:0	U-0	U-0	U-0	U-0	U-0	U-0	U-0	U-0
	—	—	—	—	—	—	—	—

Legend:			
R = Readable bit	W = Writable bit	U = Unimplemented bit, read as '0'	
-n = Value at POR	'1' = Bit is set	'0' = Bit is cleared	x = Bit is unknown

bit 31-23 **ROTRIM[8:0]** Trim bits - Provides fractional additive to RODIV value for 1/2 period of REFO1 clock

0000_0000_0 = 0/512 (0.0) divisor added to RODIV value
0000_0000_1 = 1/512 (0.001953125) divisor added to RODIV value
0000_0001_0 = 2/512 (0.00390625) divisor added to RODIV value
•
•
•
100000000 = 256/512 (0.5000) divisor added to RODIV value
•
•
•
1111_1111_0 = 510/512 (0.99609375) divisor added to RODIV value
1111_1111_1 = 511/512 (0.998046875) divisor added to RODIV value

Note: ROTRIM values greater than zero are only valid when RODIV values are greater than 0.

bit 22-0 **Unimplemented:** Read as '0'

Note: REFOxTRIM should not be written when REFOxCON[ON] ! = REFOxCON[ACTIVE] - Undefined behavior will result.

 © 2020 Microchip Technology Inc.

REGISTER 11-9: PBxDIV: PERIPHERAL BUS 'x' CLOCK DIVISOR CONTROL REGISTER (x = 1-6)

Bit Range	Bit 31/23/15/7	Bit 30/22/14/6	Bit 29/21/13/5	Bit 28/20/12/4	Bit 27/19/11/3	Bit 26/18/10/2	Bit 25/17/9/1	Bit 24/16/8/0
31:24	U-0	U-0	U-0	U-0	U-0	U-0	U-0	U-0
	—	—	—	—	—	—	—	—
23:16	U-0	U-0	U-0	U-0	U-0	U-0	U-0	U-0
	—	—	—	—	—	—	—	—
15:8	R-1	U-0	U-0	U-0	R-1	U-0	U-0	U-0
	PBxDIVON	—	—	—	PBDIVRDY	—	—	—
7:0	U-0	R/W-0	R/W-0	R/W-0	R/W-0	R/W-0	R/W-0	R/W-1
	—	PBDIV[6:0]						

Legend:			
R = Readable bit	W = Writable bit	U = Unimplemented bit, read as '0'	
-n = Value at POR	'1' = Bit is set	'0' = Bit is cleared	x = Bit is unknown

bit 31-16 **Unimplemented:** Read as '0'

bit 15 **PBxDIVON:** Peripheral Bus 'x' Output Clock Enable bit
1 = Output clock is enabled
0 = Output clock is disabled

Note 1: PB1DIV[PB1DIVON] bit cannot be written to a '0', as this clock is used by CRU.
2: PB6DIV[PB6DIVON] bit cannot be written to a '0', as this clock is used by CPU.
3: PB3DIV[PB3DIVON] bit cannot be written to a '0', as this clock is used by Wi-Fi subsystem.
4: PB4DIV[PB4DIVON] bit cannot be written to a '0', as this clock is used by Deep Sleep Controller.

bit 14-12 **Unimplemented:** Read as '0'

bit 11 **PBDIVRDY:** Peripheral Bus 'x' Clock Divisor Ready bit
1 = Clock divisor logic is not switching divisors and the PBxDIV[6:0] bits may be written
0 = Clock divisor logic is currently switching values and the PBxDIV[6:0] bits cannot be written

bit 10-7 **Unimplemented:** Read as '0'

bit 6-0 **PBDIV[6:0]:** Peripheral Bus 'x' Clock Divisor Control bits
1111111 = PBCLKx is SYSCLK divided by 128
1111110 = PBCLKx is SYSCLK divided by 127
•
•
•
0000011 = PBCLKx is SYSCLK divided by 4
0000010 = PBCLKx is SYSCLK divided by 3
0000001 = PBCLKx is SYSCLK divided by 2
0000000 = PBCLKx is SYSCLK divided by 1

Note: The system unlock sequence must be done before this register can be written.

REGISTER 11-10: SLEWCON: SLEW RATE CONTROL FOR CLOCK SWITCHING REGISTER

Bit Range	Bit 31/23/15/7	Bit 30/22/14/6	Bit 29/21/13/5	Bit 28/20/12/4	Bit 27/19/11/3	Bit 26/18/10/2	Bit 25/17/9/1	Bit 24/16/8/0
31:24	U-0	U-0	U-0	U-0	R/W-cfg	R/W-cfg	R/W-cfg	R/W-cfg
	—	—	—	—	SLWDLY[3:0]			
23:16	U-0	U-0	U-0	U-0	R/W-cfg	R/W-cfg	R/W-cfg	R/W-cfg
	—	—	—	—	SYSDIV[3:0]			
15:8	U-0	U-0	U-0	U-0	U-0	R/W-cfg	R/W-cfg	R/W-cfg
	—	—	—	—	—	SLWDIV[2:0]		
7:0	U-0	U-0	U-0	U-0	U-0	R/W-cfg	R/W-cfg	R/W-cfg
	—	—	—	—	—	UPEN	DNEN	BUSY

Legend:	cfg- Configurable at Reset		
R = Readable bit	W = Writable bit	U = Unimplemented bit, read as '0'	
-n = Value at POR	'1' = Bit is set	'0' = Bit is cleared	x = Bit is unknown

bit 31-28 **Unimplemented:** Read as '0'

bit 27-24 **SLWDLY[3:0]:** Number of clocks generated at each slew step for a clock switch

0000 = 1 clock is generated at each slew step
0001 = 2 clocks is generated at each slew step

1111 = 16 clocks is generated at each slew step

bit 19-16 **SYSDIV[3:0]:** PBx Peripheral Clock Divisor Control bit

1111 = SYSCLK is divided by 16
1110 = SYSCLK is divided by 15
•
•
•
0010 = SYSCLK is divided by 3
0001 = SYSCLK is divided by 2
0000 = SYSCLK is not divided

bit 15-11 **Unimplemented:** Read as '0'.

bit 10-8 **SLWDIV[2:0]:** Slew Divisor Steps Control bits

These bits control the maximum division steps used when slewing during a frequency change.

111 = Steps are divided by 128, 64, 32, 16, 8, 4, 2, and then no divisor 110 = Steps are divided by 64, 32, 16, 8, 4, 2, and then no divisor
101 = Steps are divided by 32, 16, 8, 4, 2, and then no divisor
100 = Steps are divided by 16, 8, 4, 2, and then no divisor
011 = Steps are divided by 8, 4, 2, and then no divisor
010 = Steps are divided by 4, 2, and then no divisor
001 = Steps are divided by 2, and then no divisor
000 = No divisor is used during slewing

Note: Each divisor step lasts 4 clocks.

bit 7-3 **Unimplemented:** Read as '0'

Note 1: The system unlock sequence must be done before this register can be written.
2: Updates to this register do not take affect until OSCCON[OSWEN] is set.

 © 2020 Microchip Technology Inc.

REGISTER 11-10: SLEWCON: SLEW RATE CONTROL FOR CLOCK SWITCHING REGISTER (CONTINUED)

bit 2 **UPEN:** Upward Slew Enable bit
Enable clock slew for switching up to faster clocks
1 = Slewing enabled for switching to a higher frequency
0 = Slewing disabled for switching to a higher frequency

bit 1 **DNEN:** Downward Slew Enable bit
Enable clock slew for switching down to slower clocks
1 = Slewing enabled for switching to a lower frequency
0 = Slewing disabled for switching to a lower frequency

bit 0 **BUSY:** Clock Switch Slewing Active Status bit (Read-only)
0 = Clock switch has reached its final value
1 = Clock frequency is actively slewed

Note 1: The system unlock sequence must be done before this register can be written.
2: Updates to this register do not take affect until OSCCON[OSWEN] is set.

REGISTER 11-11: CLKSTAT: CLOCK STATUS REGISTER

Bit Range	Bit 31/23/15/7	Bit 30/22/14/6	Bit 29/21/13/5	Bit 28/20/12/4	Bit 27/19/11/3	Bit 26/18/10/2	Bit 25/17/9/1	Bit 24/16/8/0
31:24	U-0	U-0	U-0	U-0	U-0	U-0	U-0	U-0
	—	—	—	—	—	—	—	—
23:16	U-0	U-0	U-0	U-0	U-0	U-0	U-0	U-0
	—	—	—	—	—	—	—	—
15:8	U-0	U-0	U-0	U-0	R/HS/HC-0	R/HS/HC-0	R/HS/HC-0	R/HS/HC-0
	—	—	—	—	SYSCLKRDY	PB1CLKRDY	SPLLALTRDY	WIFICLKRDY
7:0	R/HS/HC-0	R/HS/HC-0	R/HS/HC-0	R/HS/HC-0	R/HS/HC-0	R/HS/HC-0	R/HS/HC-0	R/HS/HC-0
	ETHPLLRDY	BTPLLRDY	LPRCRDY	SOSCRDY	UPLLRDY	POSCRDY	SPLLRDY	FRCRDY

Legend:	HC = Hardware Set	HC = Hardware Cleared	
R = Readable bit	W = Writable bit	U = Unimplemented bit, read as '0'	
-n = Value at POR	'1' = Bit is set	'0' = Bit is cleared	x = Bit is unknown

bit 31-12 **Unimplemented:** Read as '0'

bit 11 **SYSCLKRDY:** System Clock Ready Status bit
- 0 = SYSCLK is not stable and not ready
- 1 = SYSCLK is stable and ready

bit 10 **PB1CLKRDY:** PB1 Clock Ready Status bit
- 0 = PB1CLK is not stable and not ready
- 1 = PB1CLK is stable and ready

bit 9 **SPLLALTRDY:** System PLL Ready Status bit
- 0 = SPLL alternate output is not stable and not ready
- 1 = SPLL alternate output is stable and ready

bit 8 **WIFICLKRDY:** Wi-Fi Clock Ready Status bit
- 0 = WIFICLK is not stable and not ready
- 1 = WIFICLK is stable and ready

bit 7 **ETHPLLRDY:** ETHPLL Ready Status bit
- 0 = ETHPLL is not stable and not ready
- 1 = ETHPLL is stable and ready

bit 6 **BTPLLRDY:** Bluetooth PLL Ready Status bit
- 0 = BTPLL is not stable and not ready
- 1 = BTPLL is stable and ready

bit 5 **LPRCRDY:** LPRC Ready Status bit
- 0 = LPRC is not stable and not ready
- 1 = LPRC is stable and ready

bit 4 **SOSCRDY:** SOSC Ready Status bit
- 0 = SOSC is not stable and not ready
- 1 = SOSC is stable and ready

bit 3 **UPLLRDY:** USB PLL Ready Status bit
- 0 = UPLL is not stable and not ready
- 1 = UPLL is stable and ready

 © 2020 Microchip Technology Inc.

REGISTER 11-11: CLKSTAT: CLOCK STATUS REGISTER (CONTINUED)

bit 2 **POSCRDY:** Primary Oscillator Ready Status bit
0 = POSC is not stable and not ready
1 = POSC is stable and ready

bit 1 **SPLLRDY:** System PLL Ready Status bit
0 = SPLL Primary output is not stable and not ready
1 = SPLL Primary output is stable and ready

bit 0 **FRCRDY:** FRC Ready Status bit
0 = FRC is not stable and not ready
1 = FRC is stable and ready

REGISTER 11-12: CLKDIAG: USER CLOCK DIAGNOSTICS CONTROL REGISTER

Bit Range	Bit 31/23/15/7	Bit 30/22/14/6	Bit 29/21/13/5	Bit 28/20/12/4	Bit 27/19/11/3	Bit 26/18/10/2	Bit 25/17/9/1	Bit 24/16/8/0
31:24	U-0	U-0	U-0	U-0	U-0	U-0	U-0	U-0
	—	—	—	—	—	—	—	—
23:16	U-0	U-0	U-0	U-0	U-0	U-0	U-0	U-0
	—	—	—	—	—	—	—	—
15:8	U-0	U-0	U-0	U-0	U-0	U-0	U-0	U-0
	—	—	—	—	—	—	—	—
7:0	U-0	R/W-0	R/W-0	R/W-0	R/W-0	R/W-0	R/W-0	R/W-0
	—	ETHPLLSTOP	UPLLSTOP	SPLLSTOP	LPRCSTOP	FRCSTOP	SOSCSTOP	POSCSTOP

Legend:			
R = Readable bit	W = Writable bit	U = Unimplemented bit, read as '0'	
-n = Value at POR	'1' = Bit is set	'0' = Bit is cleared	x = Bit is unknown

bit 31-15 **Unimplemented:** Read as '0'

bit 6 **ETHPLLSTOP:** ETHPLL Clock Stop Control bit
- 0 = ETHPLL clock source runs as normal
- 1 = ETHPLL clock source is stopped

bit 5 **UPLLSTOP:** UPLL Clock Stop Control bit
- 0 = UPLL clock source runs as normal
- 1 = UPLL clock source is stopped

bit 4 **SPLLSTOP:** SPLL Clock Stop Control bit
- 0 = SPLL clock source runs as normal
- 1 = SPLL clock source is stopped

bit 3 **LPRCSTOP:** LPRC Clock Stop Control bit
- 0 = LPRC clock source runs as normal
- 1 = LPRC clock source is stopped

bit 2 **FRCSTOP:** FRC Clock Stop Control bit
- 0 = FRC clock source runs as normal
- 1 = FRC clock source is stopped

bit 1 **SOSCSTOP:** SOSC Clock Stop Control bit
- 0 = SOSC clock source runs as normal
- 1 = SOSC clock source is stopped

bit 0 **POSCSTOP:** POSC Clock Stop Control bit
- 0 = POSC clock source runs as normal
- 1 = POSC clock source is stopped

Note: The system unlock sequence must be done before this register can be written.

 © 2020 Microchip Technology Inc.

12.0 FULL-SPEED USB ON-THE-GO (OTG)

Note 1: This data sheet summarizes the features of the PIC32MZ W1 of family of devices. It is not intended to be a comprehensive reference source. To complement the information in this data sheet, refer to **Section 27. "USB On-The-Go (OTG)"** (DS61126) of the *"PIC32 Family Reference Manual"*, which is available from the Microchip web site (www.microchip.com/PIC32).

2: Some registers and associated bits described in this section may not be available on all devices. Refer to **Section 6.0 "Memory Organization"** in this data sheet for device-specific register and bit information.

The Universal Serial Bus (USB) module contains analog and digital components to provide a USB 2.0 full-speed and low-speed embedded host, full-speed device, and OTG implementation with minimum external components. This module in Host mode is intended for use as an embedded host and therefore does not implement a UHCI or OHCI controller.

The USB module consists of the following:

- Clock generator
- USB voltage comparators
- Transceiver
- Serial Interface Engine (SIE)
- USB DMA controller
- Pull-up and pull-down resistors
- Register interface

The interface diagram of the PIC32 USB OTG module is illustrated in Figure 12-1.

The clock generator provides the 48 MHz clock required for USB full-speed and low-speed communication. The voltage comparators monitor the voltage on the V_{BUS} pin to determine the state of the bus. The transceiver provides the analog translation between the USB bus and the digital logic. The SIE is a state machine that transfers data to and from the endpoint buffers, and generates the hardware protocol for data transfers. The USB DMA controller transfers data between the data buffers in RAM and the SIE. The integrated pull-up and pull-down resistors eliminate the need for external signaling components. The register interface allows the CPU to configure and communicate with the module.

The PIC32 USB module has the following features:

- USB full-speed support for host and device
- Low-speed host support
- USB OTG support
- Integrated signaling resistors
- Integrated analog comparators for VBUS monitoring
- Integrated USB transceiver
- Transaction handshaking performed by hardware
- Endpoint buffering anywhere in system RAM
- Integrated DMA to access system RAM and Flash

Note: The implementation and use of the USB specifications, as well as other third-party specifications or technologies, may require licensing; including, but not limited to, USB Implementers Forum, Inc. (USB-IF). The user is fully responsible for investigating and satisfying any applicable licensing obligations.

FIGURE 12-1: PIC32 USB INTERFACE DIAGRAM

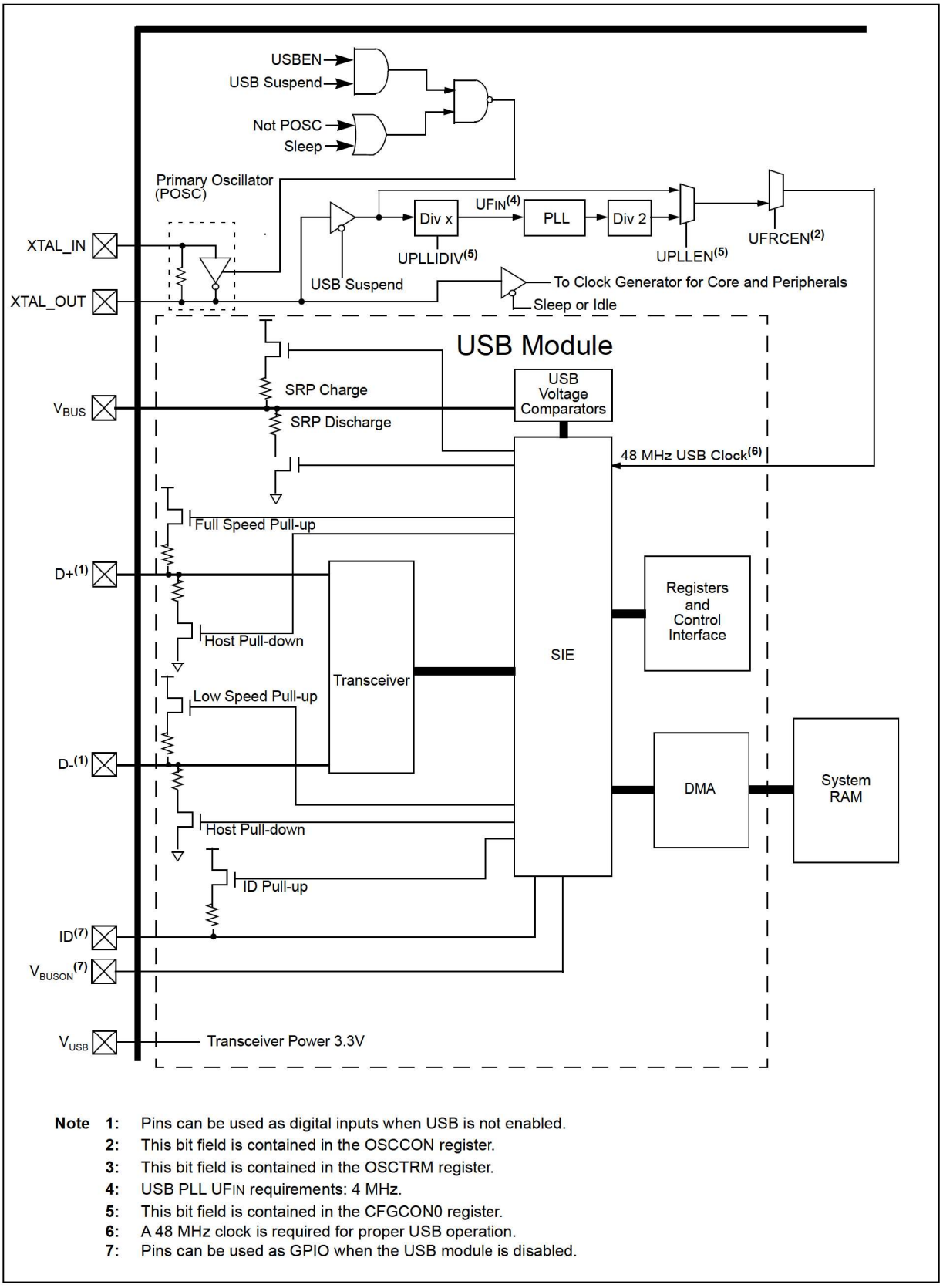

Note 1: Pins can be used as digital inputs when USB is not enabled.
2: This bit field is contained in the OSCCON register.
3: This bit field is contained in the OSCTRM register.
4: USB PLL UFIN requirements: 4 MHz.
5: This bit field is contained in the CFGCON0 register.
6: A 48 MHz clock is required for proper USB operation.
7: Pins can be used as GPIO when the USB module is disabled.

 © 2020 Microchip Technology Inc.

12.1 USB OTG Control Registers

TABLE 12-1: USB REGISTERS MAP(1)

Virtual Address (BF84_#)	Register Name	Bit Range	Bits																All Resets
			31/15	30/14	29/13	28/12	27/11	26/10	25/9	24/8	23/7	22/6	21/5	20/4	19/3	18/2	17/1	16/0	
4040	U1OTGIR(2)	31:16	—	—	—	—	—	—	—	—	—	—	—	—	—	—	—	—	
		15:0	—	—	—	—	—	—	—	—	IDIF	T1MSECIF	LSTATEIF	ACTVIF	SESVDIF	SESENDIF	—	VBUSVDIF	0000
4050	U1OTGIE	31:16	—	—	—	—	—	—	—	—	—	—	—	—	—	—	—	—	0000
		15:0	—	—	—	—	—	—	—	—	IDIE	T1MSECIE	LSTATEIE	ACTVIE	SESVDIE	SESENDIE	—	VBUSVDIE	0000
4060	U1OTGSTAT(3)	31:16	—	—	—	—	—	—	—	—	—	—	—	—	—	—	—	—	0000
		15:0	—	—	—	—	—	—	—	—	ID	—	LSTATE	—	SESVD	SESEND	—	VBUSVD	0000
4070	U1OTGCON	31:16	—	—	—	—	—	—	—	—	—	—	—	—	—	—	—	—	0000
		15:0	—	—	—	—	—	—	—	—	DPPULUP	DMPULUP	DPPULDWN	DMPULDWN	VBUSON	OTGEN	VBUSCHG	VBUSDIS	0000
4080	U1PWRC	31:16	—	—	—	—	—	—	—	—	—	—	—	—	—	—	—	—	0000
		15:0	—	—	—	—	—	—	—	—	UACTPND(4)	—	—	USLPGRD	—	—	USUSPEND	USBPWR	0000
4200	U1IR(2)	31:16	—	—	—	—	—	—	—	—	—	—	—	—	—	—	—	—	0000
		15:0	—	—	—	—	—	—	—	—	STALLIF	ATTACHIF	RESUMEIF	IDLEIF	TRNIF	SOFIF	UERRIF	URSTIF	0000
																		DETACHIF	0000
4210	U1IE	31:16	—	—	—	—	—	—	—	—	—	—	—	—	—	—	—	—	0000
		15:0	—	—	—	—	—	—	—	—	STALLIE	ATTACHIE	RESUMEIE	IDLEIE	TRNIE	SOFIE	UERRIE	URSTIE	0000
																		DETACHIE	0000
4220	U1EIR	31:16	—	—	—	—	—	—	—	—	—	—	—	—	—	—	—	—	0000
		15:0	—	—	—	—	—	—	—	—	BTSEF	BMXEF	DMAEF	BTOEF	DFN8EF	CRC16EF	CRC5EF	PIDEF	0000
																	EOFEF		0000
4230	U1EIE	31:16	—	—	—	—	—	—	—	—	—	—	—	—	—	—	—	—	0000
		15:0	—	—	—	—	—	—	—	—	BTSEE	BMXEE	DMAEE	BTOEE	DFN8EE	CRC16EE	CRC5EE	PIDEE	0000
																	EOFEE		0000
4240	U1STAT(3)	31:16	—	—	—	—	—	—	—	—	—	—	—	—	—	—	—	—	0000
		15:0	—	—	—	—	—	—	—	—	ENDPT[3:0](4)				DIR	PPBI	—	—	0000
4250	U1CON	31:16	—	—	—	—	—	—	—	—	—	—	—	—	—	—	—	—	0000
		15:0	—	—	—	—	—	—	—	—	JSTATE(4)	SE0(4)	PKTDIS	USBRST	HOSTEN	RESUME	PPBRST	USBEN	0000
													TOKBUSY					SOFEN	0000
4260	U1ADDR	31:16	—	—	—	—	—	—	—	—	—	—	—	—	—	—	—	—	0000
		15:0	—	—	—	—	—	—	—	—	LSPDEN	DEVADDR[6:0]							0000

Legend: x = unknown value on Reset, — = unimplemented, read as '0'. Reset values are shown in hexadecimal.

Note 1: Except where noted, all registers in this table have corresponding CLR, SET and INV registers at their virtual addresses, plus offsets of 0x4, 0x8 and 0xC, respectively. See **Section 13.3 "CLR, SET, and INV Registers"** for more information.

2: This register does not have asscciated CLR, SET, and INV registers.

3: All bits in this register are read-only; therefore, CLR, SET, and INV registers are not supported.

4: The Reset value for this bit is undefined.

© 2020 Microchip Technology Inc.

TABLE 12-1: USB REGISTERS MAP(1) (CONTINUED)

Virtual Address (BF84_#)	Register Name	Bit Range	Bits																All Resets
			31/15	30/14	29/13	28/12	27/11	26/10	25/9	24/8	23/7	22/6	21/5	20/4	19/3	18/2	17/1	16/0	
4270	U1BDTP1	31:16	—	—	—	—	—	—	—	—	—	—	—	—	—	—	—	—	0000
		15:0	—	—	—	—	—	—	—	—	BDTPTRL[7:1]							—	0000
4280	U1FRML(3)	31:16	—	—	—	—	—	—	—	—	—	—	—	—	—	—	—	—	0000
		15:0	—	—	—	—	—	—	—	—	FRML[7:0]								0000
4290	U1FRMH(3)	31:16	—	—	—	—	—	—	—	—	—	—	—	—	—	—	—	—	0000
		15:0	—	—	—	—	—	—	—	—	—	—	—	—	—	FRMH[10:8]			0000
42A0	U1TOK	31:16	—	—	—	—	—	—	—	—	—	—	—	—	—	—	—	—	0000
		15:0	—	—	—	—	—	—	—	—	PID[3:0]				EP[3:0]				0000
42B0	U1SOF	31:16	—	—	—	—	—	—	—	—	—	—	—	—	—	—	—	—	0000
		15:0	—	—	—	—	—	—	—	—	CNT[7:0]								0000
42C0	U1BDTP2	31:16	—	—	—	—	—	—	—	—	—	—	—	—	—	—	—	—	0000
		15:0	—	—	—	—	—	—	—	—	BDTPTRH[7:0]								0000
42D0	U1BDTP3	31:16	—	—	—	—	—	—	—	—	—	—	—	—	—	—	—	—	0000
		15:0	—	—	—	—	—	—	—	—	BDTPTRU[7:0]								0000
42E0	U1CNFG1	31:16	—	—	—	—	—	—	—	—	—	—	—	—	—	—	—	—	0000
		15:0	—	—	—	—	—	—	—	—	UTEYE	UOEMON	USBFRZ	USBSIDL	—	—	—	—	0000
4300	U1EP0	31:16	—	—	—	—	—	—	—	—	—	—	—	—	—	—	—	—	0000
		15:0	—	—	—	—	—	—	—	—	LSPD	RETRYDIS	—	EPCONDIS	EPRXEN	EPTXEN	EPSTALL	EPHSHK	0000
4310	U1EP1	31:16	—	—	—	—	—	—	—	—	—	—	—	—	—	—	—	—	0000
		15:0	—	—	—	—	—	—	—	—	—	—	—	EPCONDIS	EPRXEN	EPTXEN	EPSTALL	EPHSHK	0000
4320	U1EP2	31:16	—	—	—	—	—	—	—	—	—	—	—	—	—	—	—	—	0000
		15:0	—	—	—	—	—	—	—	—	—	—	—	EPCONDIS	EPRXEN	EPTXEN	EPSTALL	EPHSHK	0000
4330	U1EP3	31:16	—	—	—	—	—	—	—	—	—	—	—	—	—	—	—	—	0000
		15:0	—	—	—	—	—	—	—	—	—	—	—	EPCONDIS	EPRXEN	EPTXEN	EPSTALL	EPHSHK	0000
4340	U1EP4	31:16	—	—	—	—	—	—	—	—	—	—	—	—	—	—	—	—	0000
		15:0	—	—	—	—	—	—	—	—	—	—	—	EPCONDIS	EPRXEN	EPTXEN	EPSTALL	EPHSHK	0000
4350	U1EP5	31:16	—	—	—	—	—	—	—	—	—	—	—	—	—	—	—	—	0000
		15:0	—	—	—	—	—	—	—	—	—	—	—	EPCONDIS	EPRXEN	EPTXEN	EPSTALL	EPHSHK	0000
4360	U1EP6	31:16	—	—	—	—	—	—	—	—	—	—	—	—	—	—	—	—	0000
		15:0	—	—	—	—	—	—	—	—	—	—	—	EPCONDIS	EPRXEN	EPTXEN	EPSTALL	EPHSHK	0000
4370	U1EP7	31:16	—	—	—	—	—	—	—	—	—	—	—	—	—	—	—	—	0000
		15:0	—	—	—	—	—	—	—	—	—	—	—	EPCONDIS	EPRXEN	EPTXEN	EPSTALL	EPHSHK	0000

Legend: x = unknown value on Reset, — = unimplemented, read as '0'. Reset values are shown in hexadecimal.

Note 1: Except where noted, all registers in this table have corresponding CLR, SET and INV registers at their virtual addresses, plus offsets of 0x4, 0x8 and 0xC, respectively. See **Section 13.3 "CLR, SET, and INV Registers"** for more information.

2: This register does not have asscciated CLR, SET, and INV registers.

3: All bits in this register are read-only; therefore, CLR, SET, and INV registers are not supported.

4: The Reset value for this bit is undefined.

© 2020 Microchip Technology Inc.

TABLE 12-1: USB REGISTERS MAP(1) (CONTINUED)

Virtual Address (BF84_#)	Register Name	Bit Range	Bits															All Resets
			31/15	30/14	29/13	28/12	27/11	26/10	25/9	24/8	23/7	22/6	21/5	20/4	19/3	18/2	17/1	16/0	
4380	U1EP8	31:16	—	—	—	—	—	—	—	—	—	—	—	—	—	—	—	—	0000
		15:0	—	—	—	—	—	—	—	—	—	—	—	EPCONDIS	EPRXEN	EPTXEN	EPSTALL	EPHSHK	0000
4390	U1EP9	31:16	—	—	—	—	—	—	—	—	—	—	—	—	—	—	—	—	0000
		15:0	—	—	—	—	—	—	—	—	—	—	—	EPCONDIS	EPRXEN	EPTXEN	EPSTALL	EPHSHK	0000
43A0	U1EP10	31:16	—	—	—	—	—	—	—	—	—	—	—	—	—	—	—	—	0000
		15:0	—	—	—	—	—	—	—	—	—	—	—	EPCONDIS	EPRXEN	EPTXEN	EPSTALL	EPHSHK	0000
43B0	U1EP11	31:16	—	—	—	—	—	—	—	—	—	—	—	—	—	—	—	—	0000
		15:0	—	—	—	—	—	—	—	—	—	—	—	EPCONDIS	EPRXEN	EPTXEN	EPSTALL	EPHSHK	0000
43C0	U1EP12	31:16	—	—	—	—	—	—	—	—	—	—	—	—	—	—	—	—	0000
		15:0	—	—	—	—	—	—	—	—	—	—	—	EPCONDIS	EPRXEN	EPTXEN	EPSTALL	EPHSHK	0000
43D0	U1EP13	31:16	—	—	—	—	—	—	—	—	—	—	—	—	—	—	—	—	0000
		15:0	—	—	—	—	—	—	—	—	—	—	—	EPCONDIS	EPRXEN	EPTXEN	EPSTALL	EPHSHK	0000
43E0	U1EP14	31:16	—	—	—	—	—	—	—	—	—	—	—	—	—	—	—	—	0000
		15:0	—	—	—	—	—	—	—	—	—	—	—	EPCONDIS	EPRXEN	EPTXEN	EPSTALL	EPHSHK	0000
43F0	U1EP15	31:16	—	—	—	—	—	—	—	—	—	—	—	—	—	—	—	—	0000
		15:0	—	—	—	—	—	—	—	—	—	—	—	EPCONDIS	EPRXEN	EPTXEN	EPSTALL	EPHSHK	0000

Legend: x = unknown value on Reset, — = unimplemented, read as '0'. Reset values are shown in hexadecimal.

Note 1: Except where noted, all registers in this table have corresponding CLR, SET and INV registers at their virtual addresses, plus offsets of 0x4, 0x8 and 0xC, respectively. See **Section 13.3 "CLR, SET, and INV Registers"** for more information.

2: This register does not have asscciated CLR, SET, and INV registers.

3: All bits in this register are read-only; therefore, CLR, SET, and INV registers are not supported.

4: The Reset value for this bit is undefined.

© 2020 Microchip Technology Inc.

REGISTER 12-1: U1OTGIR: USB OTG INTERRUPT STATUS REGISTER

Bit Range	Bit 31/23/15/7	Bit 30/22/14/6	Bit 29/21/13/5	Bit 28/20/12/4	Bit 27/19/11/3	Bit 26/18/10/2	Bit 25/17/9/1	Bit 24/16/8/0
31:24	U-0	U-0	U-0	U-0	U-0	U-0	U-0	U-0
	—	—	—	—	—	—	—	—
23:16	U-0	U-0	U-0	U-0	U-0	U-0	U-0	U-0
	—	—	—	—	—	—	—	—
15:8	U-0	U-0	U-0	U-0	U-0	U-0	U-0	U-0
	—	—	—	—	—	—	—	—
7:0	R/K-0	R/K-0	R/K-0	R/K-0	R/K-0	R/K-0	U-0	R/K-0
	IDIF	T1MSECIF	LSTATEIF	ACTVIF	SESVDIF	SESENDIF	—	VBUSVDIF

Legend:			
R = Readable bit	W = Writable bit	P = Programmable bit	r = Reserved bit
U = Unimplemented bit	K = Write '1' to clear	-n = Bit Value at POR: (0, 1, x = unknown)	

bit 31-8 **Unimplemented:** Read as '0'

bit 7 **IDIF:** ID State Change Indicator bit
Write a '1' to this bit to clear the interrupt.
1 = Change in ID state detected
0 = No change in ID state detected

bit 6 **T1MSECIF:** 1 Millisecond Timer bit
Write a '1' to this bit to clear the interrupt.
1 = 1 millisecond timer has expired
0 = 1 millisecond timer has not expired

bit 5 **LSTATEIF:** Line State Stable Indicator bit
Write a '1' to this bit to clear the interrupt.
1 = USB line state is stable for 1 ms, but different from last time
0 = USB line state is not stable for 1 ms

bit 4 **ACTVIF:** Bus Activity Indicator bit
Write a '1' to this bit to clear the interrupt.
1 = Activity on the D+, D-, ID or V_{BUS} pins has caused the device to wake up
0 = Activity has not been detected

bit 3 **SESVDIF:** Session Valid Change Indicator bit
Write a '1' to this bit to clear the interrupt.
1 = V_{BUS} voltage has dropped below the session end level
0 = V_{BUS} voltage has not dropped below the session end level

bit 2 **SESENDIF:** B-Device V_{BUS} Change Indicator bit
Write a '1' to this bit to clear the interrupt.
1 = A change on the session end input was detected
0 = No change on the session end input was detected

bit 1 **Unimplemented:** Read as '0'

bit 0 **VBUSVDIF:** A-Device V_{BUS} Change Indicator bit
Write a '1' to this bit to clear the interrupt.
1 = Change on the session valid input detected
0 = No change on the session valid input detected

 © 2020 Microchip Technology Inc.

REGISTER 12-2: U1OTGIE: USB OTG INTERRUPT ENABLE REGISTER

Bit Range	Bit 31/23/15/7	Bit 30/22/14/6	Bit 29/21/13/5	Bit 28/20/12/4	Bit 27/19/11/3	Bit 26/18/10/2	Bit 25/17/9/1	Bit 24/16/8/0
31:24	U-0	U-0	U-0	U-0	U-0	U-0	U-0	U-0
	—	—	—	—	—	—	—	—
23:16	U-0	U-0	U-0	U-0	U-0	U-0	U-0	U-0
	—	—	—	—	—	—	—	—
15:8	U-0	U-0	U-0	U-0	U-0	U-0	U-0	U-0
	—	—	—	—	—	—	—	—
7:0	R/W-0	R/W-0	R/W-0	R/W-0	R/W-0	R/W-0	U-0	R/W-0
	IDIE	T1MSECIE	LSTATEIE	ACTVIE	SESVDIE	SESENDIE	—	VBUSVDIE

Legend:			
R = Readable bit	W = Writable bit	P = Programmable bit	r = Reserved bit
U = Unimplemented bit	-n = Bit Value at POR: (‘0’, ‘1’, x = Unknown)		

bit 31-8 **Unimplemented:** Read as ‘0’

bit 7 **IDIE:** ID Interrupt Enable bit
1 = ID interrupt enabled
0 = ID interrupt disabled

bit 6 **T1MSECIE:** 1 Millisecond Timer Interrupt Enable bit
1 = 1 millisecond timer interrupt enabled
0 = 1 millisecond timer interrupt disabled

bit 5 **LSTATEIE:** Line State Interrupt Enable bit
1 = Line state interrupt enabled
0 = Line state interrupt disabled

bit 4 **ACTVIE:** Bus Activity Interrupt Enable bit
1 = Bus activity interrupt enabled
0 = Bus activity interrupt disabled

bit 3 **SESVDIE:** Session Valid Interrupt Enable bit
1 = Session valid interrupt enabled
0 = Session valid interrupt disabled

bit 2 **SESENDIE:** B-Session End Interrupt Enable bit
1 = B-session end interrupt enabled
0 = B-session end interrupt disabled

bit 1 **Unimplemented:** Read as ‘0’

bit 0 **VBUSVDIE:** A-V_{BUS} Valid Interrupt Enable bit
1 = A-V_{BUS} valid interrupt enabled
0 = A-V_{BUS} valid interrupt disabled

REGISTER 12-3: U1OTGSTAT: USB OTG STATUS REGISTER

Bit Range	Bit 31/23/15/7	Bit 30/22/14/6	Bit 29/21/13/5	Bit 28/20/12/4	Bit 27/19/11/3	Bit 26/18/10/2	Bit 25/17/9/1	Bit 24/16/8/0
31:24	U-0	U-0	U-0	U-0	U-0	U-0	U-0	U-0
	—	—	—	—	—	—	—	—
23:16	U-0	U-0	U-0	U-0	U-0	U-0	U-0	U-0
	—	—	—	—	—	—	—	—
15:8	U-0	U-0	U-0	U-0	U-0	U-0	U-0	U-0
	—	—	—	—	—	—	—	—
7:0	R-0	U-0	R-0	U-0	R-0	R-0	U-0	R-0
	ID	—	LSTATE	—	SESVD	SESEND	—	VBUSVD

Legend:			
R = Readable bit	W = Writable bit	P = Programmable bit	r = Reserved bit
U = Unimplemented bit	-n = Bit Value at POR: (‘0’, ‘1’, x = Unknown)		

bit 31-8 **Unimplemented:** Read as ‘0’

bit 7 **ID:** ID Pin State Indicator bit
1 = No cable is attached or a type B cable has been plugged into the USB receptacle
0 = A “type A” OTG cable has been plugged into the USB receptacle

bit 6 **Unimplemented:** Read as ‘0’

bit 5 **LSTATE:** Line State Stable Indicator bit
1 = USB line state (U1CON[SE0] and U1CON[JSTATE]) has been stable for the last 1 ms
0 = USB line state (U1CON[SE0] and U1CON[JSTATE]) has not been stable for the last 1 ms

bit 4 **Unimplemented:** Read as ‘0’

bit 3 **SESVD:** Session Valid Indicator bit
1 = V_{BUS} voltage is above Session Valid on the A or B device
0 = V_{BUS} voltage is below Session Valid on the A or B device

bit 2 **SESEND:** B-Session End Indicator bit
1 = V_{BUS} voltage is below Session Valid on the B device
0 = V_{BUS} voltage is above Session Valid on the B device

bit 1 **Unimplemented:** Read as ‘0’

bit 0 **VBUSVD:** A-V_{BUS} Valid Indicator bit
1 = V_{BUS} voltage is above Session Valid on the A device
0 = V_{BUS} voltage is below Session Valid on the A device

 © 2020 Microchip Technology Inc.

REGISTER 12-4: U1OTGCON: USB OTG STATUS REGISTER

Bit Range	Bit 31/23/15/7	Bit 30/22/14/6	Bit 29/21/13/5	Bit 28/20/12/4	Bit 27/19/11/3	Bit 26/18/10/2	Bit 25/17/9/1	Bit 24/16/8/0
31:24	U-0	U-0	U-0	U-0	U-0	U-0	U-0	U-0
	—	—	—	—	—	—	—	—
23:16	U-0	U-0	U-0	U-0	U-0	U-0	U-0	U-0
	—	—	—	—	—	—	—	—
15:8	U-0	U-0	U-0	U-0	U-0	U-0	U-0	U-0
	—	—	—	—	—	—	—	—
7:0	R/W-0	R/W-0	R/W-0	R/W-0	R/W-0	R/W-0	R/W-0	R/W-0
	DPPULUP	DMPULUP	DPPULDWN	DMPULDWN	VBUSON	OTGEN	VBUSCHG	VBUSDIS

Legend:			
R = Readable bit	W = Writable bit	P = Programmable bit	r = Reserved bit
U = Unimplemented bit	-n = Bit Value at POR: (‘0’, ‘1’, x = Unknown)		

bit 31-8 **Unimplemented:** Read as ‘0’

bit 7 **DPPULUP:** D+ Pull-Up Enable bit
1 = D+ data line pull-up resistor is enabled
0 = D+ data line pull-up resistor is disabled

bit 6 **DMPULUP:** D- Pull-Up Enable bit
1 = D- data line pull-up resistor is enabled
0 = D- data line pull-up resistor is disabled

bit 5 **DPPULDWN:** D+ Pull-Down Enable bit
1 = D+ data line pull-down resistor is enabled
0 = D+ data line pull-down resistor is disabled

bit 4 **DMPULDWN:** D- Pull-Down Enable bit
1 = D- data line pull-down resistor is enabled
0 = D- data line pull-down resistor is disabled

bit 3 **VBUSON:** V_{BUS} Power-on bit
1 = V_{BUS} line is powered
0 = V_{BUS} line is not powered

bit 2 **OTGEN:** OTG Functionality Enable bit
1 = DPPULUP, DMPULUP, DPPULDWN and DMPULDWN bits are under software control
0 = DPPULUP, DMPULUP, DPPULDWN and DMPULDWN bits are under USB hardware control

bit 1 **VBUSCHG:** V_{BUS} Charge Enable bit
1 = V_{BUS} line is charged through a pull-up resistor
0 = V_{BUS} line is not charged through a resistor

bit 0 **VBUSDIS:** V_{BUS} Discharge Enable bit
1 = V_{BUS} line is discharged through a pull-down resistor
0 = V_{BUS} line is not discharged through a resistor

REGISTER 12-5: U1PWRC: USB POWER CONTROL REGISTER

Bit Range	Bit 31/23/15/7	Bit 30/22/14/6	Bit 29/21/13/5	Bit 28/20/12/4	Bit 27/19/11/3	Bit 26/18/10/2	Bit 25/17/9/1	Bit 24/16/8/0
31:24	U-0	U-0	U-0	U-0	U-0	U-0	U-0	U-0
	—	—	—	—	—	—	—	—
23:16	U-0	U-0	U-0	U-0	U-0	U-0	U-0	U-0
	—	—	—	—	—	—	—	—
15:8	U-0	U-0	U-0	U-0	U-0	U-0	U-0	U-0
	—	—	—	—	—	—	—	—
7:0	HS,HC-x	U-0	U-0	R/W-0	R/W-0	U-0	R/W-0	R/W-0
	UACTPND	—	—	USLPGRD	USBBUSY(1)	—	USUSPEND	USBPWR

Legend:			
HS = Cleared by hardware	HW = Set by hardware		
R = Readable bit	W = Writable bit	P = Programmable bit	r = Reserved bit
U = Unimplemented bit	K = Write '1' to clear	-n = Bit Value at POR: (0, 1, x = unknown)	

bit 31-8 **Unimplemented:** Read as '0'

bit 7 **UACTPND:** USB Activity Pending bit
1 = USB bus activity has been detected; but an interrupt is pending, it has not been generated yet
0 = An interrupt is not pending

bit 6-5 **Unimplemented:** Read as '0'

bit 4 **USLPGRD:** USB Sleep Entry Guard bit
1 = Sleep entry is blocked if USB bus activity is detected or if a notification is pending
0 = USB OTG module does not block Sleep entry

bit 3 **USBBUSY:** USB OTG module Busy bit(1)
1 = USB OTG module is active or disabled, but not ready to be enabled
0 = USB OTG module is not active and is ready to be enabled

Note: When USBPWR = 0 and USBBUSY = 1, status from all other registers is invalid and writes to all USB OTG module registers produce undefined results.

bit 2 **Unimplemented:** Read as '0'

bit 1 **USUSPEND:** USB Suspend Mode bit
1 = USB OTG module is placed in Suspend mode
(The 48 MHz USB clock is gated off. The transceiver is placed in a low-power state.)
0 = USB OTG module operates normally

bit 0 **USBPWR:** USB Operation Enable bit
1 = USB OTG module is turned on
0 = USB OTG module is disabled
(Outputs held inactive, device pins not used by USB, analog features are shut down to reduce power consumption.)

Note 1: This bit is not available on all devices. Refer to the specific device data sheet for details.

 © 2020 Microchip Technology Inc.

REGISTER 12-6: U1IR: USB INTERRUPT REGISTER

Bit Range	Bit 31/23/15/7	Bit 30/22/14/6	Bit 29/21/13/5	Bit 28/20/12/4	Bit 27/19/11/3	Bit 26/18/10/2	Bit 25/17/9/1	Bit 24/16/8/0
31:24	U-0	U-0	U-0	U-0	U-0	U-0	U-0	U-0
	—	—	—	—	—	—	—	—
23:16	U-0	U-0	U-0	U-0	U-0	U-0	U-0	U-0
	—	—	—	—	—	—	—	—
15:8	U-0	U-0	U-0	U-0	U-0	U-0	U-0	U-0
	—	—	—	—	—	—	—	—
7:0	R/K-0	R/K-0	R/K-0	R/K-0	R/K-0	R/K-0	R/K-0	R/K-0
	STALLIF	ATTACHIF(1)	RESUMEIF(2)	IDLEIF	TRNIF(3)	SOFIF	UERRIF(4)	URSTIF(5) / DETACHIF(6)

Legend:		
R = Readable bit	W = Writable bit	P = Programmable bit r = Reserved bit
U = Unimplemented bit	K = Write '1' to clear	-n = Bit Value at POR: (0, 1, x = unknown)

bit 31-8 **Unimplemented:** Read as '0'

bit 7 **STALLIF:** STALL Handshake Interrupt bit
Write a '1' to this bit to clear the interrupt.
1 = In Host mode, a STALL handshake was received during the handshake phase of the transaction. In Device mode, a STALL handshake was transmitted during the handshake phase of the transaction.
0 = STALL handshake has not been sent

bit 6 **ATTACHIF:** Peripheral Attach Interrupt bit(1)
Write a '1' to this bit to clear the interrupt.
1 = Peripheral attachment was detected by the USB OTG module
0 = Peripheral attachment was not detected

bit 5 **RESUMEIF:** Resume Interrupt bit(2)
Write a '1' to this bit to clear the interrupt.
1 = K-State is observed on the D+ or D- pin for 2.5 µs
0 = K-State is not observed

bit 4 **IDLEIF:** Idle Detect Interrupt bit
Write a '1' to this bit to clear the interrupt.
1 = Idle condition detected (constant Idle state of 3 ms or more)
0 = No Idle condition detected

bit 3 **TRNIF:** Token Processing Complete Interrupt bit(3)
Write a '1' to this bit to clear the interrupt.
1 = Processing of current token is complete; a read of the U1STAT register provides endpoint information
0 = Processing of current token not complete

bit 2 **SOFIF:** SOF Token Interrupt bit
Write a '1' to this bit to clear the interrupt.
1 = SOF token received by the peripheral or the SOF threshold reached by the host
0 = SOF token was not received nor threshold reached

Note 1: This bit is valid only if the HOSTEN bit is set (see Register 12-11), there is no activity on the USB for 2.5 µs, and the current bus state is not SE0.
2: When not in Suspend mode, this interrupt should be disabled.
3: Clearing this bit will cause the STAT FIFO to advance.
4: Only error conditions enabled through the U1EIE register will set this bit.
5: Device mode.
6: Host mode.

REGISTER 12-6: U1IR: USB INTERRUPT REGISTER (CONTINUED)

bit 1 **UERRIF:** USB Error Condition Interrupt bit(4)
Write a '1' to this bit to clear the interrupt.
1 = Unmasked Error condition has occurred
0 = Unmasked Error condition has not occurred

bit 0 **URSTIF:** USB Reset Interrupt bit (Device mode)(5)
1 = Valid USB Reset has occurred
0 = No USB Reset has occurred
DETACHIF: USB Detach Interrupt bit (Host mode)(6)
1 = Peripheral detachment was detected by the USB OTG module
0 = Peripheral detachment was not detected

Note 1: This bit is valid only if the HOSTEN bit is set (see Register 12-11), there is no activity on the USB for 2.5 µs, and the current bus state is not SE0.

2: When not in Suspend mode, this interrupt should be disabled.

3: Clearing this bit will cause the STAT FIFO to advance.

4: Only error conditions enabled through the U1EIE register will set this bit.

5: Device mode.

6: Host mode.

 © 2020 Microchip Technology Inc.

REGISTER 12-7: U1IE: USB INTERRUPT ENABLE REGISTER(1)

Bit Range	Bit 31/23/15/7	Bit 30/22/14/6	Bit 29/21/13/5	Bit 28/20/12/4	Bit 27/19/11/3	Bit 26/18/10/2	Bit 25/17/9/1	Bit 24/16/8/0
31:24	U-0	U-0	U-0	U-0	U-0	U-0	U-0	U-0
	—	—	—	—	—	—	—	—
23:16	U-0	U-0	U-0	U-0	U-0	U-0	U-0	U-0
	—	—	—	—	—	—	—	—
15:8	U-0	U-0	U-0	U-0	U-0	U-0	U-0	U-0
	—	—	—	—	—	—	—	—
7:0	R/W-0	R/W-0	R/W-0	R/W-0	R/W-0	R/W-0	R/W-0	R/W-0
	STALLIE	ATTACHIE	RESUMEIE	IDLEIE	TRNIE	SOFIE	UERRIE	URSTIE(2) / DETACHIE(3)

Legend:			
R = Readable bit	W = Writable bit	P = Programmable bit	r = Reserved bit
U = Unimplemented bit	-n = Bit Value at POR: (‘0’, ‘1’, x = Unknown)		

bit 31-8 **Unimplemented:** Read as ‘0’

bit 7 **STALLIE:** STALL Handshake Interrupt Enable bit
1 = STALL interrupt enabled
0 = STALL interrupt disabled

bit 6 **ATTACHIE:** ATTACH Interrupt Enable bit
1 = ATTACH interrupt enabled
0 = ATTACH interrupt disabled

bit 5 **RESUMEIE:** RESUME Interrupt Enable bit
1 = RESUME interrupt enabled
0 = RESUME interrupt disabled

bit 4 **IDLEIE:** Idle Detect Interrupt Enable bit
1 = Idle interrupt enabled
0 = Idle interrupt disabled

bit 3 **TRNIE:** Token Processing Complete Interrupt Enable bit
1 = TRNIF interrupt enabled
0 = TRNIF interrupt disabled

bit 2 **SOFIE:** SOF Token Interrupt Enable bit
1 = SOFIF interrupt enabled
0 = SOFIF interrupt disabled

bit 1 **UERRIE:** USB Error Interrupt Enable bit
1 = USB Error interrupt enabled
0 = USB Error interrupt disabled

bit 0 **URSTIE:** USB Reset Interrupt Enable bit(2)
1 = URSTIF interrupt enabled
0 = URSTIF interrupt disabled
DETACHIE: USB Detach Interrupt Enable bit(3)
1 = DATTCHIF interrupt enabled
0 = DATTCHIF interrupt disabled

Note 1: For an interrupt to propagate to the USBIF bit (IFS1[25]), the UERRIE bit (U1IE[1]) must be set.
2: Device mode.
3: Host mode.

REGISTER 12-8: U1EIR: USB ERROR INTERRUPT STATUS REGISTER

Bit Range	Bit 31/23/15/7	Bit 30/22/14/6	Bit 29/21/13/5	Bit 28/20/12/4	Bit 27/19/11/3	Bit 26/18/10/2	Bit 25/17/9/1	Bit 24/16/8/0
31:24	U-0	U-0	U-0	U-0	U-0	U-0	U-0	U-0
	—	—	—	—	—	—	—	—
23:16	U-0	U-0	U-0	U-0	U-0	U-0	U-0	U-0
	—	—	—	—	—	—	—	—
15:8	U-0	U-0	U-0	U-0	U-0	U-0	U-0	U-0
	—	—	—	—	—	—	—	—
7:0	R/K-0	R/K-0	R/K-0	R/K-0	R/K-0	R/K-0	R/K-0	R/W-0
	BTSEF	BMXEF	DMAEF(1)	BTOEF(2)	DFN8EF	CRC16EF	CRC5EF(3,4) / EOFEF(5)	PIDEF

Legend:			
R = Readable bit	W = Writable bit	P = Programmable bit	r = Reserved bit
U = Unimplemented bit	K = Write '1' to clear	-n = Bit Value at POR: ('0', '1', x = unknown)	

bit 31-8 **Unimplemented:** Read as '0'

bit 7 **BTSEF:** Bit Stuff Error Flag bit
Write a '1' to this bit to clear the interrupt.
1 = Packet rejected due to bit stuff error
0 = Packet accepted

bit 6 **BMXEF:** Bus Matrix Error Flag bit
Write a '1' to this bit to clear the interrupt.
1 = The base address of the BDT or the address of an individual buffer pointed to by a BDT entry, is invalid.
0 = No address error

bit 5 **DMAEF:** DMA Error Flag bit(1)
Write a '1' to this bit to clear the interrupt.
1 = USB DMA error condition detected
0 = No DMA error

bit 4 **BTOEF:** Bus Turnaround Time-Out Error Flag bit(2)
Write a '1' to this bit to clear the interrupt.
1 = Bus turnaround time-out has occurred
0 = No bus turnaround time-out

bit 3 **DFN8EF:** Data Field Size Error Flag bit
Write a '1' to this bit to clear the interrupt.
1 = Data field received is not an integral number of bytes
0 = Data field received is an integral number of bytes

Note 1: This type of error occurs when the module's request for the DMA bus is not granted in time to service the module's demand for memory, resulting in an overflow or underflow condition, and/or the allocated buffer size is not sufficient to store the received data packet causing it to be truncated.

2: This type of error occurs when more than 16-bit-times of Idle from the previous End-of-Packet (EOP) has elapsed.

3: This type of error occurs when the module is transmitting or receiving data and the SOF counter has reached zero.

4: Device mode.

5: Host mode.

 © 2020 Microchip Technology Inc.

REGISTER 12-8: U1EIR: USB ERROR INTERRUPT STATUS REGISTER (CONTINUED)

bit 2 **CRC16EF:** CRC16 Failure Flag bit
Write a '1' to this bit to clear the interrupt.
1 = Data packet rejected due to CRC16 error
0 = Data packet accepted

bit 1 **CRC5EF:** CRC5 Host Error Flag bit(3,4)
Write a '1' to this bit to clear the interrupt.
1 = Token packet rejected due to CRC5 error
0 = Token packet accepted
EOFEF: EOF Error Flag bit(5)
1 = EOF error condition detected
0 = No EOF error condition

bit 0 **PIDEF:** PID Check Failure Flag bit
1 = PID check failed
0 = PID check passed

Note 1: This type of error occurs when the module's request for the DMA bus is not granted in time to service the module's demand for memory, resulting in an overflow or underflow condition, and/or the allocated buffer size is not sufficient to store the received data packet causing it to be truncated.

2: This type of error occurs when more than 16-bit-times of Idle from the previous End-of-Packet (EOP) has elapsed.

3: This type of error occurs when the module is transmitting or receiving data and the SOF counter has reached zero.

4: Device mode.

5: Host mode.

REGISTER 12-9: U1EIE: USB ERROR INTERRUPT ENABLE REGISTER(1)

Bit Range	Bit 31/23/15/7	Bit 30/22/14/6	Bit 29/21/13/5	Bit 28/20/12/4	Bit 27/19/11/3	Bit 26/18/10/2	Bit 25/17/9/1	Bit 24/16/8/0
31:24	U-0	U-0	U-0	U-0	U-0	U-0	U-0	U-0
	—	—	—	—	—	—	—	—
23:16	U-0	U-0	U-0	U-0	U-0	U-0	U-0	U-0
	—	—	—	—	—	—	—	—
15:8	U-0	U-0	U-0	U-0	U-0	U-0	U-0	U-0
	—	—	—	—	—	—	—	—
7:0	R/W-0	R/W-0	R/W-0	R/W-0	R/W-0	R/W-0	R/W-0	R/W-0
	BTSEE	BMXEE	DMAEE	BTOEE	DFN8EE	CRC16EE	CRC5EE(2) / EOFEE(3)	PIDEE

Legend:			
R = Readable bit	W = Writable bit	P = Programmable bit	r = Reserved bit
U = Unimplemented bit	-n = Bit Value at POR: (‘0’, ‘1’, x = Unknown)		

bit 31-8 **Unimplemented:** Read as ‘0’

bit 7 **BTSEE:** Bit Stuff Error Interrupt Enable bit
1 = BTSEF interrupt enabled
0 = BTSEF interrupt disabled

bit 6 **BMXEE:** Bus Matrix Error Interrupt Enable bit
1 = BMXEF interrupt enabled
0 = BMXEF interrupt disabled

bit 5 **DMAEE:** DMA Error Interrupt Enable bit
1 = DMAEF interrupt enabled
0 = DMAEF interrupt disabled

bit 4 **BTOEE:** Bus Turnaround Time-Out Error Interrupt Enable bit
1 = BTOEF interrupt enabled
0 = BTOEF interrupt disabled

bit 3 **DFN8EE:** Data Field Size Error Interrupt Enable bit
1 = DFN8EF interrupt enabled
0 = DFN8EF interrupt disabled

bit 2 **CRC16EE:** CRC16 Failure Interrupt Enable bit
1 = CRC16EF interrupt enabled
0 = CRC16EF interrupt disabled

bit 1 **CRC5EE:** CRC5 Host Error Interrupt Enable bit(2)
1 = CRC5EF interrupt enabled
0 = CRC5EF interrupt disabled
EOFEE: EOF Error Interrupt Enable bit(3)
1 = EOF interrupt enabled
0 = EOF interrupt disabled

Note 1: For an interrupt to propagate USBIF bit (IFS1[25]), the UERRIE bit (U1IE[1]) must be set.
2: Device mode.
3: Host mode.

 © 2020 Microchip Technology Inc.

REGISTER 12-9: U1EIE: USB ERROR INTERRUPT ENABLE REGISTER(1) (CONTINUED)

bit 0 **PIDEE:** PID Check Failure Interrupt Enable bit
1 = PIDEF interrupt enabled
0 = PIDEF interrupt disabled

Note 1: For an interrupt to propagate USBIF bit (IFS1[25]), the UERRIE bit (U1IE[1]) must be set.
2: Device mode.
3: Host mode.

REGISTER 12-10: U1STAT: USB STATUS REGISTER(1)

Bit Range	Bit 31/23/15/7	Bit 30/22/14/6	Bit 29/21/13/5	Bit 28/20/12/4	Bit 27/19/11/3	Bit 26/18/10/2	Bit 25/17/9/1	Bit 24/16/8/0
31:24	U-0	U-0	U-0	U-0	U-0	U-0	U-0	U-0
	—	—	—	—	—	—	—	—
23:16	U-0	U-0	U-0	U-0	U-0	U-0	U-0	U-0
	—	—	—	—	—	—	—	—
15:8	U-0	U-0	U-0	U-0	U-0	U-0	U-0	U-0
	—	—	—	—	—	—	—	—
7:0	R-x	R-x	R-x	R-x	R-x	R-x	U-0	U-0
	ENDPT[3:0]				DIR	PPBI	—	—

Legend:			
R = Readable bit	W = Writable bit	P = Programmable bit	r = Reserved bit
U = Unimplemented bit	-n = Bit Value at POR: (‘0’, ‘1’, x = Unknown)		

bit 31-8 **Unimplemented:** Read as ‘0’

bit 7-4 **ENDPT[3:0]:** Encoded Number of Last Endpoint Activity bits
(Represents the number of the BDT, updated by the last USB transfer.)
1111 = Endpoint 15
1110 = Endpoint 14
•
•
•
0001 = Endpoint 1
0000 = Endpoint 0

bit 3 **DIR:** Last BD Direction Indicator bit
1 = Last transaction was a TX
0 = Last transaction was a RX

bit 2 **PPBI:** Ping-pong BD Pointer Indicator bit
1 = Last transaction was to the ODD BD bank
0 = Last transaction was to the EVEN BD bank

bit 1-0 **Unimplemented:** Read as ‘0’

Note 1: The U1STAT register is a window into a 4 byte FIFO maintained by the USB OTG module. U1STAT value is only valid when the TRNIF bit (U1IR[3]) is active. Clearing the TRNIF bit (U1IR[3]) advances the FIFO. Data in register is invalid when the TRNIF bit (U1IR[3]) = 0.

REGISTER 12-11: U1CON: USB CONTROL REGISTER

Bit Range	Bit 31/23/15/7	Bit 30/22/14/6	Bit 29/21/13/5	Bit 28/20/12/4	Bit 27/19/11/3	Bit 26/18/10/2	Bit 25/17/9/1	Bit 24/16/8/0
31:24	U-0	U-0	U-0	U-0	U-0	U-0	U-0	U-0
	—	—	—	—	—	—	—	—
23:16	U-0	U-0	U-0	U-0	U-0	U-0	U-0	U-0
	—	—	—	—	—	—	—	—
15:8	U-0	U-0	U-0	U-0	U-0	U-0	U-0	U-0
	—	—	—	—	—	—	—	—
7:0	R-x	R-x	R/W-0	R/W-0	R/W-0	R/W-0	R/W-0	U-0
	JSTATE	SE0	PKTDIS(4) / TOKBUSY(1,5)	USBRST	HOSTEN(2)	RESUME(3)	PPBRST	USBEN(4) / SOFEN(5)

Legend:			
R = Readable bit	W = Writable bit	P = Programmable bit	r = Reserved bit
U = Unimplemented bit	-n = Bit Value at POR: (‘0’, ‘1’, x = Unknown)		

bit 31-8 **Unimplemented:** Read as ‘0’

bit 7 **JSTATE:** Live Differential Receiver JSTATE flag bit
1 = JSTATE detected on the USB
0 = No JSTATE detected

bit 6 **SE0:** Live Single-Ended Zero flag bit
1 = Single-Ended Zero detected on the USB
0 = No Single-Ended Zero detected

bit 5 **PKTDIS:** Packet Transfer Disable bit(4)
1 = Token and packet processing disabled (set upon SETUP token received)
0 = Token and packet processing enabled
TOKBUSY: Token Busy Indicator bit(1,5)
1 = Token being executed by the USB OTG module
0 = No token being executed

bit 4 **USBRST:** Module Reset bit(5)
1 = USB Reset generated
0 = USB Reset terminated

bit 3 **HOSTEN:** Host Mode Enable bit(2)
1 = USB host capability enabled
0 = USB host capability disabled

bit 2 **RESUME:** RESUME Signaling Enable bit(3)
1 = RESUME signaling activated
0 = RESUME signaling disabled

Note 1: Software is required to check this bit before issuing another token command to the U1TOK register, see Register 12-15.
2: All host control logic is reset any time that the value of this bit is toggled.
3: Software must set RESUME for 10 ms if the part is a function, or for 25 ms if the part is a host, and then clear it to enable remote wake-up. In Host mode, the USB OTG module will append a low-speed EOP to the RESUME signaling when this bit is cleared.
4: Device mode.
5: Host mode.

 © 2020 Microchip Technology Inc.

REGISTER 12-11: U1CON: USB CONTROL REGISTER (CONTINUED)

bit 1 **PPBRST:** Ping-Pong Buffers Reset bit
1 = Reset all Even/Odd buffer pointers to the EVEN BD banks
0 = Even/Odd buffer pointers not being Reset

bit 0 **USBEN:** USB OTG Module Enable bit(4)
1 = USB OTG module and supporting circuitry enabled
0 = USB OTG module and supporting circuitry disabled
SOFEN: SOF Enable bit(5)
1 = SOF token sent every 1 ms
0 = SOF token disabled

Note 1: Software is required to check this bit before issuing another token command to the U1TOK register, see Register 12-15.
2: All host control logic is reset any time that the value of this bit is toggled.
3: Software must set RESUME for 10 ms if the part is a function, or for 25 ms if the part is a host, and then clear it to enable remote wake-up. In Host mode, the USB OTG module will append a low-speed EOP to the RESUME signaling when this bit is cleared.
4: Device mode.
5: Host mode.

REGISTER 12-12: U1ADDR: USB ADDRESS REGISTER

Bit Range	Bit 31/23/15/7	Bit 30/22/14/6	Bit 29/21/13/5	Bit 28/20/12/4	Bit 27/19/11/3	Bit 26/18/10/2	Bit 25/17/9/1	Bit 24/16/8/0
31:24	U-0	U-0	U-0	U-0	U-0	U-0	U-0	U-0
	—	—	—	—	—	—	—	—
23:16	U-0	U-0	U-0	U-0	U-0	U-0	U-0	U-0
	—	—	—	—	—	—	—	—
15:8	U-0	U-0	U-0	U-0	U-0	U-0	U-0	U-0
	—	—	—	—	—	—	—	—
7:0	R/W-0	R/W-0	R/W-0	R/W-0	R/W-0	R/W-0	R/W-0	R/W-0
	LSPDEN	DEVADDR[6:0]						

Legend:			
R = Readable bit	W = Writable bit	P = Programmable bit	r = Reserved bit
U = Unimplemented bit	-n = Bit Value at POR: (‘0’, ‘1’, x = Unknown)		

bit 31-8 **Unimplemented:** Read as ‘0’

bit 7 **LSPDEN:** Low-Speed Enable Indicator bit
1 = Next token command to be executed at low-speed
0 = Next token command to be executed at full-speed

bit 6-0 **DEVADDR[6:0]:** 7-bit USB Device Address bits

REGISTER 12-13: U1FRML: USB FRAME NUMBER LOW REGISTER

Bit Range	Bit 31/23/15/7	Bit 30/22/14/6	Bit 29/21/13/5	Bit 28/20/12/4	Bit 27/19/11/3	Bit 26/18/10/2	Bit 25/17/9/1	Bit 24/16/8/0
31:24	U-0	U-0	U-0	U-0	U-0	U-0	U-0	U-0
	—	—	—	—	—	—	—	—
23:16	U-0	U-0	U-0	U-0	U-0	U-0	U-0	U-0
	—	—	—	—	—	—	—	—
15:8	U-0	U-0	U-0	U-0	U-0	U-0	U-0	U-0
	—	—	—	—	—	—	—	—
7:0	R/W-0	R/W-0	R/W-0	R/W-0	R/W-0	R/W-0	R/W-0	R/W-0
	FRML[7:0]							

Legend:			
R = Readable bit	W = Writable bit	P = Programmable bit	r = Reserved bit
U = Unimplemented bit	-n = Bit Value at POR: (‘0’, ‘1’, x = Unknown)		

bit 31-8 **Unimplemented:** Read as ‘0’

bit 7-0 **FRML[7:0]:** 11-bit Frame Number Lower bits
The register bits are updated with the current frame number whenever a SOF TOKEN is received.

REGISTER 12-14: U1FRMH: USB FRAME NUMBER HIGH REGISTER

Bit Range	Bit 31/23/15/7	Bit 30/22/14/6	Bit 29/21/13/5	Bit 28/20/12/4	Bit 27/19/11/3	Bit 26/18/10/2	Bit 25/17/9/1	Bit 24/16/8/0
31:24	U-0	U-0	U-0	U-0	U-0	U-0	U-0	U-0
	—	—	—	—	—	—	—	—
23:16	U-0	U-0	U-0	U-0	U-0	U-0	U-0	U-0
	—	—	—	—	—	—	—	—
15:8	U-0	U-0	U-0	U-0	U-0	U-0	U-0	U-0
	—	—	—	—	—	—	—	—
7:0	R/W-0	R/W-0	R/W-0	R/W-0	R/W-0	R/W-0	R/W-0	R/W-0
	—	—	—	—	—	FRMH[2:0]		

Legend:			
R = Readable bit	W = Writable bit	P = Programmable bit	r = Reserved bit
U = Unimplemented bit	-n = Bit Value at POR: (‘0’, ‘1’, x = Unknown)		

bit 31-3 **Unimplemented:** Read as ‘0’

bit 2-0 **FRMH[2:0]:** Upper 3 bits of the Frame Number bits
The register bits are updated with the current frame number whenever a SOF TOKEN is received.

 © 2020 Microchip Technology Inc.

REGISTER 12-15: U1TOK: USB TOKEN REGISTER

Bit Range	Bit 31/23/15/7	Bit 30/22/14/6	Bit 29/21/13/5	Bit 28/20/12/4	Bit 27/19/11/3	Bit 26/18/10/2	Bit 25/17/9/1	Bit 24/16/8/0
31:24	U-0	U-0	U-0	U-0	U-0	U-0	U-0	U-0
	—	—	—	—	—	—	—	—
23:16	U-0	U-0	U-0	U-0	U-0	U-0	U-0	U-0
	—	—	—	—	—	—	—	—
15:8	U-0	U-0	U-0	U-0	U-0	U-0	U-0	U-0
	—	—	—	—	—	—	—	—
7:0	R/W-0	R/W-0	R/W-0	R/W-0	R/W-0	R/W-0	R/W-0	R/W-0
	PID[3:0](1)				EP[3:0]			

Legend:			
R = Readable bit	W = Writable bit	P = Programmable bit	r = Reserved bit
U = Unimplemented bit	-n = Bit Value at POR: (‘0’, ‘1’, x = Unknown)		

bit 31-8 **Unimplemented:** Read as ‘0’

bit 7-4 **PID[3:0]:** Token Type Indicator bits(1)
0001 = OUT (TX) token type transaction
1001 = IN (RX) token type transaction
1101 = SETUP (TX) token type transaction
Note: All other values are reserved and must not be used.

bit 3-0 **EP[3:0]:** Token Command Endpoint Address bits
The four bit value must specify a valid endpoint.

Note 1: All other values are reserved and must not be used.

REGISTER 12-16: U1SOF: USB SOF THRESHOLD REGISTER

Bit Range	Bit 31/23/15/7	Bit 30/22/14/6	Bit 29/21/13/5	Bit 28/20/12/4	Bit 27/19/11/3	Bit 26/18/10/2	Bit 25/17/9/1	Bit 24/16/8/0
31:24	U-0	U-0	U-0	U-0	U-0	U-0	U-0	U-0
	—	—	—	—	—	—	—	—
23:16	U-0	U-0	U-0	U-0	U-0	U-0	U-0	U-0
	—	—	—	—	—	—	—	—
15:8	U-0	U-0	U-0	U-0	U-0	U-0	U-0	U-0
	—	—	—	—	—	—	—	—
7:0	R/W-0	R/W-0	R/W-0	R/W-0	R/W-0	R/W-0	R/W-0	R/W-0
	CNT[7:0]							

Legend:			
R = Readable bit	W = Writable bit	P = Programmable bit	r = Reserved bit
U = Unimplemented bit	-n = Bit Value at POR: (‘0’, ‘1’, x = Unknown)		

bit 31-8 **Unimplemented:** Read as ‘0’

bit 7-0 **CNT[7:0]:** SOF Threshold Value bits
Typical values of the threshold are:
0100 1010 = 64-byte packet
0010 1010 = 32-byte packet
0001 1010 = 16-byte packet
0001 0010 = 8-byte packet

 © 2020 Microchip Technology Inc.

REGISTER 12-17: U1BDTP1: USB BDT REGISTER

Bit Range	Bit 31/23/15/7	Bit 30/22/14/6	Bit 29/21/13/5	Bit 28/20/12/4	Bit 27/19/11/3	Bit 26/18/10/2	Bit 25/17/9/1	Bit 24/16/8/0
31:24	U-0	U-0	U-0	U-0	U-0	U-0	U-0	U-0
	—	—	—	—	—	—	—	—
23:16	U-0	U-0	U-0	U-0	U-0	U-0	U-0	U-0
	—	—	—	—	—	—	—	—
15:8	U-0	U-0	U-0	U-0	U-0	U-0	U-0	U-0
	—	—	—	—	—	—	—	—
7:0	R/W-0	R/W-0	R/W-0	R/W-0	R/W-0	R/W-0	R/W-0	U-0
	BDTPTRL[15:9]							—

Legend:			
R = Readable bit	W = Writable bit	P = Programmable bit	r = Reserved bit
U = Unimplemented bit	-n = Bit Value at POR: (‘0’, ‘1’, x = Unknown)		

bit 31-8 **Unimplemented:** Read as ‘0’

bit 7-1 **BDTPTRL[15:9]:** BDT Base Address Low bits
This 7-bit value provides address bits 15 through 9 of the BDT base address, which defines the BDT’s starting location in the system memory.
The 32-bit BDT base address is 512 byte aligned.

bit 0 **Unimplemented:** Read as ‘0’

REGISTER 12-18: U1BDTP2: USB BDT PAGE 2 REGISTER

Bit Range	Bit 31/23/15/7	Bit 30/22/14/6	Bit 29/21/13/5	Bit 28/20/12/4	Bit 27/19/11/3	Bit 26/18/10/2	Bit 25/17/9/1	Bit 24/16/8/0
31:24	U-0	U-0	U-0	U-0	U-0	U-0	U-0	U-0
	—	—	—	—	—	—	—	—
23:16	U-0	U-0	U-0	U-0	U-0	U-0	U-0	U-0
	—	—	—	—	—	—	—	—
15:8	U-0	U-0	U-0	U-0	U-0	U-0	U-0	U-0
	—	—	—	—	—	—	—	—
7:0	R/W-0	R/W-0	R/W-0	R/W-0	R/W-0	R/W-0	R/W-0	R/W-0
	BDTPTRH[23:16]							

Legend:			
R = Readable bit	W = Writable bit	P = Programmable bit	r = Reserved bit
U = Unimplemented bit	-n = Bit Value at POR: (‘0’, ‘1’, x = Unknown)		

bit 31-8 **Unimplemented:** Read as ‘0’

bit 7-0 **BDTPTRH[23:16]:** BDT Base Address High bits
This 8-bit value provides address bits 23 through 16 of the BDT base address, which defines the BDT’s starting location in the system memory.
The 32-bit BDT base address is 512 byte aligned.

REGISTER 12-19: U1BDTP3: USB BDT PAGE 3 REGISTER

Bit Range	Bit 31/23/15/7	Bit 30/22/14/6	Bit 29/21/13/5	Bit 28/20/12/4	Bit 27/19/11/3	Bit 26/18/10/2	Bit 25/17/9/1	Bit 24/16/8/0
31:24	U-0	U-0	U-0	U-0	U-0	U-0	U-0	U-0
	—	—	—	—	—	—	—	—
23:16	U-0	U-0	U-0	U-0	U-0	U-0	U-0	U-0
	—	—	—	—	—	—	—	—
15:8	U-0	U-0	U-0	U-0	U-0	U-0	U-0	U-0
	—	—	—	—	—	—	—	—
7:0	R/W-0	R/W-0	R/W-0	R/W-0	R/W-0	R/W-0	R/W-0	R/W-0
	BDTPTRU[31:24]							

Legend:			
R = Readable bit	W = Writable bit	P = Programmable bit	r = Reserved bit
U = Unimplemented bit	-n = Bit Value at POR: (‘0’, ‘1’, x = Unknown)		

bit 31-8 **Unimplemented:** Read as ‘0’

bit 7-0 **BDTPTRU[31:24]:** BDT Base Address Upper bits

This 8-bit value provides address bits 31 through 24 of the BDT base address, which defines the BDT’s starting location in the system memory.

The 32-bit BDT base address is 512 byte aligned.

 © 2020 Microchip Technology Inc.

REGISTER 12-20: U1CNFG1: USB CONFIGURATION 1 REGISTER

Bit Range	Bit 31/23/15/7	Bit 30/22/14/6	Bit 29/21/13/5	Bit 28/20/12/4	Bit 27/19/11/3	Bit 26/18/10/2	Bit 25/17/9/1	Bit 24/16/8/0
31:24	U-0	U-0	U-0	U-0	U-0	U-0	U-0	U-0
	—	—	—	—	—	—	—	—
23:16	U-0	U-0	U-0	U-0	U-0	U-0	U-0	U-0
	—	—	—	—	—	—	—	—
15:8	U-0	U-0	U-0	U-0	U-0	U-0	U-0	U-0
	—	—	—	—	—	—	—	—
7:0	R/W-0	R/W-0	R/W-0	R/W-0	U-0	U-0	U-0	R/W-0
	UTEYE	UOEMON	USBFRZ	USBSIDL	—	—	—	UASUSPND

Legend:			
R = Readable bit	W = Writable bit	P = Programmable bit	r = Reserved bit
U = Unimplemented bit	-n = Bit Value at POR: (‘0’, ‘1’, x = Unknown)		

bit 31-8 **Unimplemented:** Read as ‘0’

bit 7 **UTEYE:** USB Eye-Pattern Test Enable bit
1 = Eye-Pattern test enabled
0 = Eye-Pattern test disabled

bit 6 **UOEMON:** USB $\overline{OE}$ Monitor Enable bit
1 = OE signal is active; it indicates intervals during which the D+/D- lines are driving
0 = OE signal is inactive

bit 5 **USBFRZ:** Freeze in Debug Mode bit
1 = When emulator is in Debug mode, module freezes operation
0 = When emulator is in Debug mode, module continues operation

bit 4 **USBSIDL:** Stop in Idle Mode bit
1 = Discontinue module operation when device enters Idle mode
0 = Continue module operation in Idle mode

bit 3-1 **Unimplemented:** Read as ‘0’

bit 0 **UASUSPND:** Automatic Suspend Enable bit
1 = USB OTG module automatically suspends upon entry to Sleep mode. See the USUSPEND bit (U1PWRC[1]) in Register 12-5.
0 = USB OTG module does not automatically suspend upon entry to Sleep mode. Software must use the USUSPEND bit (U1PWRC[1]) to suspend the module, including the USB 48 MHz clock

REGISTER 12-21: U1EP0-U1EP15: USB ENDPOINT CONTROL REGISTERS

Bit Range	Bit 31/23/15/7	Bit 30/22/14/6	Bit 29/21/13/5	Bit 28/20/12/4	Bit 27/19/11/3	Bit 26/18/10/2	Bit 25/17/9/1	Bit 24/16/8/0
31:24	U-0	U-0	U-0	U-0	U-0	U-0	U-0	U-0
	—	—	—	—	—	—	—	—
23:16	U-0	U-0	U-0	U-0	U-0	U-0	U-0	U-0
	—	—	—	—	—	—	—	—
15:8	U-0	U-0	U-0	U-0	U-0	U-0	U-0	U-0
	—	—	—	—	—	—	—	—
7:0	R/W-0	R/W-0	U-0	R/W-0	R/W-0	R/W-0	R/W-0	R/W-0
	LSPD	RETRYDIS	—	EPCONDIS	EPRXEN	EPTXEN	EPSTALL	EPHSHK

Legend:			
R = Readable bit	W = Writable bit	P = Programmable bit	r = Reserved bit
U = Unimplemented bit	-n = Bit Value at POR: (‘0’, ‘1’, x = Unknown)		

bit 31-8 **Unimplemented:** Read as ‘0’

bit 7 **LSPD:** Low-Speed Direct Connection Enable bit (Host mode and U1EP0 only)
1 = Direct connection to a low-speed device enabled
0 = Direct connection to a low-speed device disabled; hub required with PRE_PID

bit 6 **RETRYDIS:** Retry Disable bit (Host mode and U1EP0 only)
1 = Retry NAK’d transactions disabled
0 = Retry NAK’d transactions enabled; retry done in hardware

bit 5 **Unimplemented:** Read as ‘0’

bit 4 **EPCONDIS:** Bidirectional Endpoint Control bit
If EPTXEN = 1 and EPRXEN = 1:
1 = Disable endpoint n for control transfers; only TX and RX transfers are allowed
0 = Enable endpoint n for control (SETUP) transfers; TX and RX transfers are also allowed
Otherwise, this bit is ignored.

bit 3 **EPRXEN:** Endpoint Receive Enable bit
1 = Endpoint n receive enabled
0 = Endpoint n receive disabled

bit 2 **EPTXEN:** Endpoint Transmit Enable bit
1 = Endpoint n transmit enabled
0 = Endpoint n transmit disabled

bit 1 **EPSTALL:** Endpoint Stall Status bit
1 = Endpoint n is stalled
0 = Endpoint n is not stalled

bit 0 **EPHSHK:** Endpoint Handshake Enable bit
1 = Endpoint handshake enabled
0 = Endpoint handshake disabled (typically used for isochronous endpoints)

 © 2020 Microchip Technology Inc.

13.0 I/O PORTS

Note:	This data sheet summarizes the features of the PIC32MZ W1 family of devices. It is not intended to be a comprehensive reference source. To complement the information in this data sheet, refer to **Section 12. "I/O Ports"** (DS60001120) in the *"PIC32 Family Reference Manual"*, which is available from the Microchip web site (www.microchip.com/PIC32).

General purpose I/O pins allow the PIC32MZ W1 family of devices to monitor and control other devices. To add flexibility and functionality, some pins are multiplexed with alternate function(s). These functions depend on which peripheral features are on the device. In general, when a peripheral is functioning, that pin may not be used as a GPIO pin.

Some of the key features of the I/O ports are:

- Individual output pin open-drain enable/disable
- Individual input pin weak pull-up and pull-down
- Monitor selective inputs and generate interrupt when change in pin state is detected
- Operation during Sleep and Idle modes
- Fast bit manipulation using CLR, SET and INV registers

Figure 13-1 illustrates a block diagram of a typical multiplexed I/O port.

FIGURE 13-1: BLOCK DIAGRAM OF A TYPICAL MULTIPLEXED PORT STRUCTURE

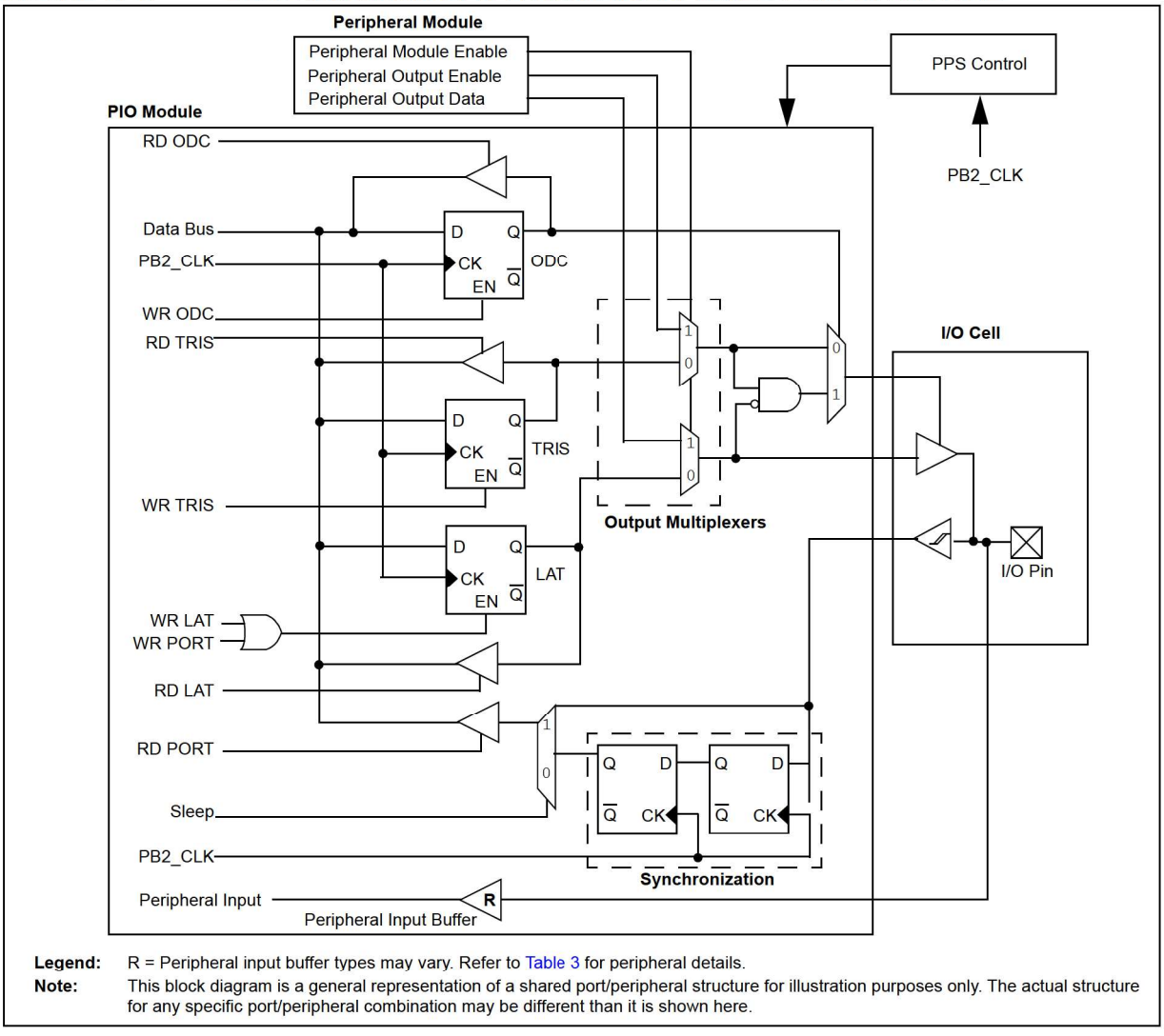

Legend: R = Peripheral input buffer types may vary. Refer to Table 3 for peripheral details.

Note: This block diagram is a general representation of a shared port/peripheral structure for illustration purposes only. The actual structure for any specific port/peripheral combination may be different than it is shown here.

13.1 Parallel I/O (PIO) Ports

All port pins have up to 14 registers directly associated with their operation as digital I/O. The data direction register (TRISx) determines whether the pin is an input or an output. If the data direction bit is a '1', then the pin is an input. All port pins are defined as inputs after a Reset. Reads from the latch (LATx) read the latch. Writes to the latch write the latch. Reads from the port (PORTx) read the port pins, while writes to the port pins write the latch.

13.1.1 OPEN-DRAIN CONFIGURATION

In addition to the PORTx, LATx, and TRISx registers for data control, some port pins can also be individually configured for either digital or open-drain output. This is controlled by the Open-Drain Control register, ODCx, associated with each port. Setting any of the bits configures the corresponding pin to act as an open-drain output.

The open-drain feature allows the generation of outputs higher than VDD (for example, 5V) on any desired 5V tolerant pins by using external pull-up resistors. The maximum open-drain voltage allowed is the same as the maximum VIH specification. For pin names, refer to Table 3.

13.1.2 CONFIGURING ANALOG AND DIGITAL PORT PINS

The ANSELx register controls the operation of the analog port pins. The port pins that are to function as analog inputs must have their corresponding ANSEL and TRIS bits set. In order to use port pins for I/O functionality with digital modules, such as timers, UARTs, and so on, the corresponding ANSELx bit must be cleared.

The ANSELx register has a default value of 0xFFFF; therefore, all pins that share analog functions are analog (not digital) by default.

If the TRIS bit is cleared (output) while the ANSELx bit is set, the digital output level (VOH or VOL) is converted by an analog peripheral, such as the ADC module or Comparator module.

When the PORT register is read, all pins configured as analog input channels are read as cleared (a low level).

Pins configured as digital inputs do not convert an analog input. Analog levels on any pin defined as a digital input (including the ANx pins) can cause the input buffer to consume current that exceeds the device specifications.

13.1.3 I/O PORT WRITE/READ TIMING

One instruction cycle is required between a port direction change or port write operation and a read operation of the same port. Typically this instruction would be an NOP.

13.1.4 INPUT CHANGE NOTIFICATION

The input change notification function of the I/O ports allows the PIC32MZ W1 family of devices to generate interrupt requests to the processor in response to a change-of-state on selected input pins. This feature can detect input change-of-states even in Sleep mode, when the clocks are disabled. Every I/O port pin can be selected (enabled) for generating an interrupt request on a change-of-state.

Seven control registers are associated with the Change Notice (CN) functionality of each I/O port. The CNENx/CNNEx registers contain the CN interrupt enable control bits for each of the input pins. Setting any of these bits enables a CN interrupt for the corresponding pins. CNENx enables a mismatch CN interrupt condition when the EDGEDETECT bit (CNCONx<11>) is not set. When the EDGEDETECT bit is set, CNNEx controls the negative edge while CNENx controls the positive.

The CNSTATx/CNFx registers indicate the status of change notice based on the setting of the EDGEDETECT bit. If the EDGEDETECT bit is set to '0', the CNSTATx register indicates whether a change occurred on the corresponding pin since the last read of the PORTx bit. If the EDGEDETECT bit is set to '1', the CNFx register indicates whether a change has occurred and through the CNNEx/CNENx registers the edge type of the change that occurred is also indicated.

Each I/O pin also has a weak pull-up and a weak pull-down connected to it. The pull-ups act as a current source or sink source connected to the pin, and eliminate the need for external resistors when push-button or keypad devices are connected. The pull-ups and pull-downs are enabled separately using the CNPUx and the CNPDx registers, which contain the control bits for each of the pins. Setting any of the control bits enables the weak pull-ups and/or pull-downs for the corresponding pins.

Note:	Pull-ups and pull-downs on change notification pins should always be disabled when the port pin is configured as a digital output.

An additional control register (CNCONx) is shown in Register 13-3.

 © 2020 Microchip Technology Inc.

13.2 Registers for Slew Rate Control

Some I/O pins can be configured for various types of slew rate control on its associated port. This is controlled by the Slew Rate Control bits in the SRCON1x and SRCON0x registers that are associated with each I/O port. The slew rate control is configured using the corresponding bit in each register, as shown in Table 13-1.

As an example, writing 0x0001, 0x0000 to SRCON1A and SRCON0A, respectively, will enable slew rate control on the RA0 pin and sets the slew rate to the slow edge rate.

TABLE 13-1: SLEW RATE CONTROL BIT SETTINGS(1)

SRCON1x	SRCON0x	Description
1	1	Slew rate control is enabled and is set to the slowest edge rate.
1	0	Slew rate control is enabled and is set to the slow edge rate.
0	1	Slew rate control is enabled and is set to the medium edge rate.
0	0	Slew rate control is disabled and is set to the fastest edge rate.

Note 1: By default, all of the port pins are set to the fastest edge rate.

13.3 CLR, SET, and INV Registers

Every I/O module register has a corresponding CLR (clear), SET (set) and INV (invert) register designed to provide fast atomic bit manipulations. As the name of the register implies, a value written to a SET, CLR or INV register effectively performs the implied operation, but only on the corresponding base register and only bits specified as '1' are modified. Bits specified as '0' are not modified.

Reading SET, CLR and INV registers return undefined values. To see the affects of a write operation to a SET, CLR or INV register, the base register must be read.

13.4 Peripheral Pin Select (PPS)

A major challenge in general purpose devices is providing the largest possible set of peripheral features while minimizing the conflict of features on I/O pins. The challenge is even greater on low pin-count devices. In an application where more than one peripheral needs to be assigned to a single pin, inconvenient workarounds in application code or a complete redesign may be the only option.

PPS configuration provides an alternative to these choices by enabling peripheral set selection and their placement on a wide range of I/O pins. By increasing the pinout options available on a particular device, users can better tailor the device to their entire application, rather than trimming the application to fit the device.

The PPS configuration feature operates over a fixed subset of digital I/O pins. Users may independently map the input and/or output of most digital peripherals to these I/O pins. PPS is performed in software and generally does not require the device to be reprogrammed. Hardware safeguards are included that prevent accidental or spurious changes to the peripheral mapping once it has been established.

13.4.1 AVAILABLE PINS

The number of available pins is dependent on the particular device and its pin count. Pins that support the PPS feature include the designation "RPn" in their full pin designation, where "RP" designates a remappable peripheral and "n" is the remappable port number.

13.4.2 AVAILABLE PERIPHERALS

The peripherals managed by the PPS are all digital-only peripherals. These include general serial communications (UART, SPI, and CAN), general purpose timer clock inputs, timer-related peripherals (input capture and output compare), interrupt-on-change inputs, and reference clocks (input and output).

In comparison, some digital-only peripheral modules are never included in the PPS feature. This is because the peripheral's function requires special I/O circuitry on a specific port and cannot be easily connected to multiple pins. These modules include I^2C among others. A similar requirement excludes all modules with analog inputs, such as the ADC.

A key difference between remappable and non-remappable peripherals is that remappable peripherals are not associated with a default I/O pin. The peripheral must always be assigned to a specific I/O pin before it can be used. In contrast, non-remappable peripherals are always available on a default pin, assuming that the peripheral is active and not conflicting with another peripheral.

When a remappable peripheral is active on a given I/O pin, it takes priority over all other digital I/O and digital communication peripherals associated with the pin. Priority is given regardless of the type of peripheral that is mapped. Remappable peripherals never take priority over any analog functions associated with the pin.

13.4.3 CONTROLLING PERIPHERAL PIN SELECT

PPS features are controlled through two sets of SFRs: one to map peripheral inputs, and one to map outputs. As they are separately controlled, a particular peripheral's input and output (if the peripheral has both) can be placed on any selectable function pin without constraint.

The association of a peripheral to a peripheral-selectable pin is handled in two different ways, depending on whether an input or output is being mapped.

13.4.4 INPUT MAPPING

The inputs of the PPS options are mapped on the basis of the peripheral. That is, a control register associated with a peripheral dictates the pin it will be mapped to. The [*pin name*]R registers, where [*pin name*] refers to the peripheral pins listed in Table 13-2, are used to configure peripheral input mapping (see Register 13-1). Each register contains set of 4-bit fields. Programming these bit fields with an appropriate value maps the RPn pin with the corresponding value to that peripheral. For any given device, the valid range of values for any bit field is shown in Table 13-2.

For example, Figure 13-2 illustrates the remappable pin selection for the U1RX input.

FIGURE 13-2: REMAPPABLE INPUT EXAMPLE FOR U1RX

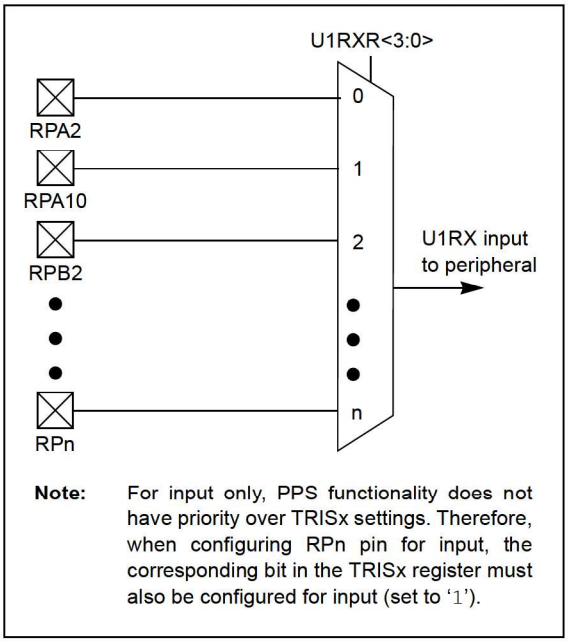

Note: For input only, PPS functionality does not have priority over TRISx settings. Therefore, when configuring RPn pin for input, the corresponding bit in the TRISx register must also be configured for input (set to '1').

13.4.5 VIRTUAL INPUT PINS

Included in the input pin mappings are special inputs taken from nodes within the device. These nodes include outputs from built-in digital noise filters. These inputs may be used to filter a pin input before presenting that signal to another module like a ICAP or UART input.

This is accomplished by configuring a particular module to use PTG30 or PTG31 (which come from the PTG module) instead of a device pin, using the mapping.

 © 2020 Microchip Technology Inc.

TABLE 13-2: INPUT PIN SELECTION

Peripheral Pin	[*pin name*]R SFR	[*pin name*]R bits	[*pin name*]R Value to RPn Pin Selection
INT4	INT4R	INT4R<3:0>	4'b0000 = RPA0 4'b0001 = RPA4 4'b0010 = RPA12 4'b0011 = RPB0 4'b0100 = RPB4 4'b0101 = RPB8 4'b0110 = RPB12 4'b0111 = RPC0 4'b1000 = RPC4 4'b1001 = RPC9 4'b1010 = RPC13 4'b1011 = RPK0 4'b1100 = RPK4 4'b1100 = RPK8 4'b1101 = RPK12 4'b1111 = Reserved
INT0	INT0R	INT0R<3:0>	
T1CK	T1CKR	T1CKR<3:0>	
T5CK	T5CKR	T5CKR<3:0>	
IC4	IC4R	IC4R<3:0>	
U3RX	U3RXR	U3RXR<3:0>	
SDI1	SDI1R	SDI1R<3:0>	
ECOL	ECOLR	ECOLR<3:0>	
ETXCLK	ETXCLKR	ETXCLKR<3:0>	
REFI	REFIR	REFIR<3:0>	
OCFD	OCFDR	OCFDR<3:0>	
INT3	INT3R	INT3R<3:0>	4'b0000 = RPA1 4'b0001 = RPA5 4'b0010 = RPA13 4'b0011 = RPB1 4'b0100 = RPB5 4'b0101 = RPB9 4'b0110 = RPB13 4'b0111 = RPC1 4'b1000 = RPC5 4'b1001 = RPC10 4'b1010 = RPC14 4'b1011 = RPK1 4'b1100 = RPK5 4'b1100 = RPK9 4'b1101 = RPK13 4'b1111 = Reserved
T2CK	T2CKR	T2CKR<3:0>	
T6CK	T6CKR	T6CKR<3:0>	
IC3	IC3R	IC3R<3:0>	
U1CTS	U1CTSR	U1CTSR<3:0>	
U2RX	U2RXR	U2RXR<3:0>	
SDI2	SDI2R	SDI2R<3:0>	
ERXD3	ERXD3R	ERXD3R<3:0>	
OCFC	OCFCR	OCFCR<3:0>	
INT2	INT2R	INT2R<3:0>	4'b0000 = RPA2 4'b0001 = RPA10 4'b0010 = RPA14 4'b0011 = RPB2 4'b0100 = RPB6 4'b0101 = RPB10 4'b0110 = RB14 4'b0111 = RPC2 4'b1000 = RPC6 4'b1001 = RPC11 4'b1010 = RPC15 4'b1011 = RPK2 4'b1100 = RPK6 4'b1100 = RPK10 4'b1101 = RPK14 4'b1111 = PTG30
T3CK	T3CKR	T3CKR<3:0>	
T7CK	T7CKR	T7CKR<3:0>	
IC1	IC1R	IC1R<3:0>	
U1RX	U1RXR	U1RXR<3:0>	
U2CTSn	U2CTSnR	U2CTSnR<3:0>	
C1RX	C1RXR	C1RXR<3:0>	
ECRS	ECRSR	ECRSR<3:0>	
ERXD2	ERXD2R	ERXD2R<3:0>	
$\overline{SS1}$	SS1R	SS1R<3:0>	
OCFB	OCFBR	OCFBR<3:0>	

TABLE 13-2: INPUT PIN SELECTION (CONTINUED)

Peripheral Pin	[*pin name*]R SFR	[*pin name*]R bits	[*pin name*]R Value to RPn Pin Selection
INT1	INT1R	INT1R<3:0>	4'b0000 = RPA3 4'b0001 = RPA11 4'b0010 = RPA15 4'b0011 = RPB3 4'b0100 = RPB7 4'b0101 = RPB11 4'b0110 = Reserved 4'b0111 = RPC3 4'b1000 = RPC7 4'b1001 = RPC8 4'b1010 = RPC12 4'b1011 = RPK3 4'b1100 = RPK7 4'b1100 = RPK11 4'b1101 = Reserved 4'b1111 = PTG31
T4CK	T4CKR	T4CKR<3:0>	
IC2	IC2R	IC2R<3:0>	
U3CTSn	U3CTSnR	U3CTSnR<3:0>	
SS2	SS2R	SS2R<3:0>	
C2RX	C2RXR	C2RXR<3:0>	
OCFA	OCFAR	OCFAR<3:0>	

 © 2020 Microchip Technology Inc.

13.4.6 OUTPUT MAPPING

In contrast to inputs, the outputs of the PPS options are mapped on the basis of the pin. In this case, a control register associated with a particular pin dictates the peripheral output to be mapped. The RPnR registers (Register 13-2) are used to control output mapping. Like the [*pin name*]R registers, each register contains set of 4-bit fields. The value of the bit field corresponds to one of the peripherals, and that peripherals output is mapped to the pin (see Table 13-3 and Figure 13-3).

A null output is associated with the output register Reset value of '0'. This is done to ensure that remappable outputs remain disconnected from all output pins by default.

FIGURE 13-3: EXAMPLE OF MULTIPLEXING OF REMAPPABLE OUTPUT FOR RPA0

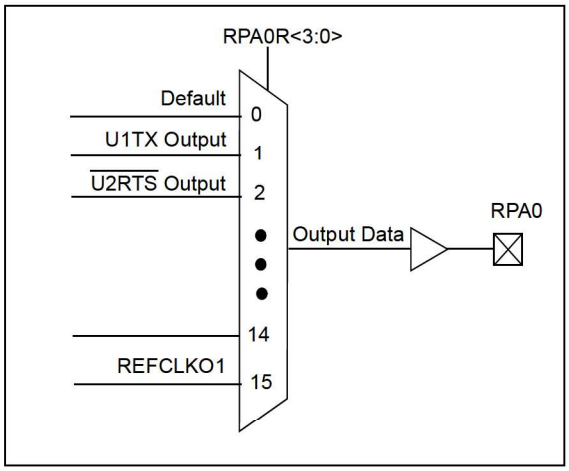

13.4.7 CONTROLLING CONFIGURATION CHANGES

Some restrictions on peripheral remapping are needed to prevent accidental configuration changes as the peripheral remapping can be changed during run time. PIC32MZ W1 family of devices include two features to prevent alterations to the peripheral map:

- Control register lock sequence
- Configuration bit select lock

13.4.7.1 Control Register Lock

Under normal operation, writes to the RPnR and [*pin name*]R registers are not allowed. Attempted writes appear to execute normally, but the contents of the registers remain unchanged. To change these registers, they must be unlocked in hardware. The register lock is controlled by the IOLOCK Configuration bit (CFGCON0<13>). Setting IOLOCK prevents writes to the control registers; clearing IOLOCK allows writes.

Note:	To set or clear the IOLOCK bit, an unlock sequence must be executed. Refer to **Section 42. "Oscillators with Enhanced PLL"** in the *"PIC32 Family Reference Manual"* for details.

TABLE 13-3: OUTPUT PIN SELECTION

RPn Port Pin	RPnR SFR	RPnR bits	RPnR Value to Peripheral Selection
RPA0	RPA0R	RPA0R<4:0>	5'b00000 = No Connect 5'b00001 = U1TX 5'b00010 = U2RTS 5'b00011 = SDO1 5'b00100 = SDO2 5'b00101 = OC1 5'b00110 = C1TX 5'b10010 = REFO1 5'b10011 = PTG28
RPA4	RPA4R	RPA4R<4:0>	
RPA12	RPA12R	RPA12R<4:0>	
RPB0	RPB0R	RPB0R<4:0>	
RPB4	RPB4R	RPB4R<4:0>	
RPB8	RPB8R	RPB8R<4:0>	
RPB12	RPB12R	RPB12R<4:0>	
RPC0	RPC0R	RPC0R<4:0>	
RPC4	RPC4R	RPC4R<4:0>	
RPK0	RPK0R	RPK0R<4:0>	
RPK4	RPK4R	RPK4R<4:0>	
RPK8	RPK8R	RPK8R<4:0>	
RPK12	RPK12R	RPK12R<4:0>	
RPC9	RPC9R	RPC9R<4:0>	
RPC13	RPC13R	RPC13R<4:0>	
RPA1	RPA1R	RPA1R<4:0>	5'b00000 = No Connect 5'b00001 = U3TX 5'b00011 = SDO1 5'b00100 = SDO2 5'b00101 = OC2 5'b00110 = C2TX 5'b10010 = REFO2 5'b10011 = PTG29 5'b10110 = ETXERR
RPA5	RPA5R	RPA5R<4:0>	
RPA13	RPA13R	RPA13R<4:0>	
RPB1	RPB1R	RPB1R<4:0>	
RPB5	RPB5R	RPB5R<4:0>	
RPB9	RPB9R	RPB9R<4:0>	
RPB13	RPB13R	RPB13R<4:0>	
RPC1	RPC1R	RPC1R<4:0>	
RPC5	RPC5R	RPC5R<4:0>	
RPK1	RPK1R	RPK1R<4:0>	
RPK5	RPK5R	RPK5R<4:0>	
RPK9	RPK9R	RPK9R<4:0>	
RPK13	RPK13R	RPK13R<4:0>	
RPC10	RPC10R	RPC10R<4:0>	
RPC14	RPC14R	RPC14R<4:0>	

 © 2020 Microchip Technology Inc.

TABLE 13-3: OUTPUT PIN SELECTION (CONTINUED)

RPn Port Pin	RPnR SFR	RPnR bits	RPnR Value to Peripheral Selection
RPA2	RPA2R	RPA2R<4:0>	5'b00000 = No Connect 5'b00010 = U3RTS 5'b00011 = SS1 5'b00101 = OC3 5'b10010 = REFO3 5'b10011 = PTG30 5'b10110 = ETXD3
RPA10	RPA10R	RPA10R<4:0>	
RPA14	RPA14R	RPA14R<4:0>	
RPB2	RPB2R	RPB2R<4:0>	
RPB6	RPB6R	RPB6R<4:0>	
RPB10	RPB10R	RPB10R<4:0>	
RPB14	RPB14R	RPB14R<4:0>	
RPC2	RPC2R	RPC2R<4:0>	
RPC6	RPC6R	RPC6R<4:0>	
RPK2	RPK2R	RPK2R<4:0>	
RPK6	RPK6R	RPK6R<4:0>	
RPK10	RPK10R	RPK10R<4:0>	
RPK14	RPK14R	RPK14R<4:0>	
RPC11	RPC11R	RPC11R<4:0>	
RPC15	RPC15R	RPC15R<4:0>	
RPA3	RPA3R	RPA3R<4:0>	5'b00000 = No Connect 5'b00001 = U1RTS 5'b00010 = U2TX 5'b00100 = SS2 5'b00101 = OC4 5'b10010 = REFO4 5'b10011 = PTG31 5'b10110 = ETXD2
RPA11	RPA11R	RPA11R<4:0>	
RPA15	RPA15R	RPA15R<4:0>	
RPB3	RPB3R	RPB3R<4:0>	
RPB7	RPB7R	RPB7R<4:0>	
RPB11	RPB11R	RPB11R<4:0>	
RPC3	RPC3R	RPC3R<4:0>	
RPC7	RPC7R	RPC7R<4:0>	
RPC8	RPC8R	RPC8R<4:0>	
RPK3	RPK3R	RPK3R<4:0>	
RPK7	RPK7R	RPK7R<4:0>	
RPK11	RPK11R	RPK11R<4:0>	
RPC12	RPC12R	RPC12R<4:0>	

13.5 Function Priority for Device Pins

Device pins have an associated priority order in which functionality is brought out on it. Availability of PPS functionality is impacted by this priority order. For example, if high-speed UART is enabled, pins PA6, PA7, PA8, and PA9 are given priority to be used as UART pins instead of PORT pins.

Refer to Table 13-4, Table 13-5, Table 13-6, and Table 13-7 for the priority in which functions are brought out on each device pin.

Refer to **2.0 "PIC32MZ1025W104 SoC Description"** for mapping of device pin name to package pin numbers.

Note:	Refer to corresponding reference peripheral chapter for functionality details.

TABLE 13-4: PRIORITY FOR DEVICE PINS PA(N) (N = 0-15)

Pin Name	Functions in Priority Order	Reference Peripheral
PA0	SQICS0	SQI
	CVDT17	CVD
	RPA0	PPS
	IOCA0	Change Notification
	RA0	Port I/O
PA1	RPA1	PPS
	$\overline{SS1}$/CS1/FSYNC1	SPI
	IOCA1	Change Notification
	RA1	Port I/O
PA2	RPA2	PPS
	SCL2	I2C
	IOCA2	Change Notification
	RA2	Port I/O
PA3	RPA3	PPS
	SDA2	I2C
	IOCA3	Change Notification
	RA3	Port I/O
PA4	RPA4	PPS
	SCL1	I2C
	IOCA4	Change Notification
	RA4	Port I/O
PA5	RPA5	PPS
	SDA1	I2C
	IOCA5	Change Notification
	RA5	Port I/O
PA6	U1CTSn	UART/USART
	IOCA6	Change Notification
	RA6	Port I/O
PA7	U1RTSn/U1BCLK	UART/USART
	IOCA7	Change Notification
	RA7	Port I/O

 © 2020 Microchip Technology Inc.

TABLE 13-4: PRIORITY FOR DEVICE PINS PA(N) (N = 0-15) (CONTINUED)

Pin Name	Functions in Priority Order	Reference Peripheral
PA8	U1RX	UART/USART
	IOCA8	Change Notification
	RA8	Port I/O
PA9	U1TX	UART/USART
	IOCA9	Change Notification
	RA9	Port I/O
PA10	AN17	ADC
	CVD17	CVD
	CVDR17	CVD
	RPA10	PPS
	CTRTM0	Timer
	INT0	Edge Interrupt
	IOCA10	Change Notification
	RA10	Port I/O
PA11	RPA11	PPS
	SCK2	SPI
	IOCA11	Change Notification
	RA11	Port I/O
PA12	AN16	ADC
	CVD16	CVD
	CVDR16	CVD
	RPA12	PPS
	CTRTM1	Timer
	IOCA12	Change Notification
	RA12	Port I/O
PA13	AN15	ADC
	ANN1	ADC (Differential)
	CVD15	CVD
	CVDR15	CVD
	RPA13	PPS
	IOCA13	Change Notification
	RA13	Port I/O
PA14	AN14	ADC
	ANN0	ADC (Differential)
	CVD14	CVD
	CVDR14	CVD
	RPA14	PPS
	IOCA14	Change Notification
	RA14	Port I/O

TABLE 13-4: PRIORITY FOR DEVICE PINS PA(N) (N = 0-15) (CONTINUED)

Pin Name	Functions in Priority Order	Reference Peripheral
PA15	AN13	ADC
	CVD13	CVD
	CVDR13	CVD
	RPA15	PPS
	IOCA15	Change Notification
	RA15	Port I/O

TABLE 13-5: PRIORITY FOR DEVICE PINS PB(N) (N = 0-15)

Pin Name	Functions in Priority Order	Reference Peripheral
PB0	AN0	ADC
	RPB0	PPS
	IOCB0	Change Notification
	RB0	Port I/O
PB1	AN1	ADC
	CVD1	CVD
	CVDR1	CVD
	CVDT6	CVD
	ETH_EXCLK_OUT	Ethernet/Clock
	RPB1	PPS
	VBUSON	USB
	IOCB1	Change Notification
	RB1	Port I/O
PB2	PGD1/EMUD1	ICD
	AN2	ADC
	CVD2	CVD
	CVDR2	CVD
	CVDT5	CVD
	RPB2	PPS
	USBID	USB
	IOCB2	Change Notification
	RB2	Port I/O
PB3	PGC1/EMUC1	ICD
	AN3	ADC
	CVD3	CVD
	CVDR3	CVD
	CVDT4	CVD
	RPB3	PPS
	USBOEN	USB
	IOCB3	Change Notification
	RB3	Port I/O

 © 2020 Microchip Technology Inc.

TABLE 13-5: PRIORITY FOR DEVICE PINS PB(N) (N = 0-15) (CONTINUED)

Pin Name	Functions in Priority Order	Reference Peripheral
PB4	PGC2/EMUC2	ICD
	AN4	ADC
	CVD4	CVD
	CVDR4	CVD
	CVDT3	CVD
	RPB4	PPS
	IOCB4	Change Notification
	RB4	Port I/O
PB5	PGD2/EMUD2	ICD
	AN5	ADC
	CVD5	CVD
	CVDR5	CVD
	CVDT2	CVD
	RTCC	RTCC
	RPB5	PPS
	IOCB5	Change Notification
	RB5	Port I/O
PB6	TMS	JTAG
	AN6	ADC
	CVD6	CVD
	CVDR6	CVD
	CVDT1	CVD
	RPB6	PPS
	IOCB6	Change Notification
	RB6	Port I/O
PB7	TDO	JTAG
	AN7	ADC
	CVD7	CVD
	CVDR7	CVD
	CVDT0	CVD
	RPB7	PPS
	IOCB7	Change Notification
	RB7	Port I/O
PB8	PGC4/EMUC4	ICD
	TCK	JTAG
	AN8	ADC
	CVD8	CVD
	CVDR8	CVD
	RPB8	PPS
	IOCB8	Change Notification
	RB8	Port I/O

TABLE 13-5: PRIORITY FOR DEVICE PINS PB(N) (N = 0-15) (CONTINUED)

Pin Name	Functions in Priority Order	Reference Peripheral
PB9	PGD4/EMUD4	ICD/Test Entry
	TDI	JTAG
	AN9	ADC
	CVD9	CVD
	CVDR9	CVD
	RPB9	PPS
	IOCB9	Change Notification
	RB9	Port I/O
PB10	AN10	ADC
	CVD10	CVD
	CVDR10	CVD
	LVDIN	LVD Voltage Reference
	RPB10	PPS
	IOCB10	Change Notification
	RB10	Port I/O
PB11	ANB0	ADC (Alternate)
	RPB11	PPS
	IOCB11	Change Notification
	RB11	Port I/O
PB12	ANA0	ADC (Alternate)
	RPB12	PPS
	IOCB12	Change Notification
	RB12	Port I/O
PB13	AN11	ADC
	CVD11	CVD
	CVDR11	CVD
	RPB13	PPS
	IOCB13	Change Notification
	RB13	Port I/O
PB14	AN12	ADC
	CVD12	CVD
	CVDR12	CVD
	RPB14	PPS
	IOCB14	Change Notification
	RB14	Port I/O
PB15	SOSCI	Secondary Oscillator Input
	RPB15	Port Input Only

 © 2020 Microchip Technology Inc.

TABLE 13-6: PRIORITY FOR DEVICE PIN PC(N) (N = 0-15)

Pin Name	Functions in Priority Order	Reference Peripheral
PC0	SQICS1	SQI
	CVDT18	CVD
	RPC0	PPS
	IOCC0	Change Notification
	RC0	Port I/O
PC1	SQID3	SQI
	CVDT19	CVD
	RPC1	PPS
	IOCC1	Change Notification
	RC1	Port I/O
PC2	SQID2	SQI
	CVDT20	CVD
	RPC2	PPS
	IOCC2	Change Notification
	RC2	Port I/O
PC3	SQID1	SQI
	CVDT21	CVD
	RPC3	PPS
	IOCC3	Change Notification
	RC3	Port I/O
PC4	SCLKI	Secondary Oscillator - Digital
	SQID0	SQI
	CVDT22	CVD
	RPC4	PPS
	IOCC4	Change Notification
	RC4	Port I/O
PC5	SQICLK	SQI
	CVDT23	CVD
	RPC5	PPS
	IOCC5	Change Notification
	RC5	Port I/O
PC6	RPC6	PPS
	SCK1	SPI
	IOCC6	Change Notification
	RC6	Port I/O
PC7	RPC7	PPS
	SDI1	SPI
	IOCC7	Change Notification
	RC7	Port I/O

TABLE 13-6: PRIORITY FOR DEVICE PIN PC(N) (N = 0-15) (CONTINUED)

Pin Name	Functions in Priority Order	Reference Peripheral
PC8	RPC8	PPS
	SDO1	SPI
	IOCC8	Change Notification
	RC8	Port I/O
PC9	CVDT7	CVD
	ERXERR	Ethernet
	RPC9	PPS
	IOCC9	Change Notification
	RC9	Port I/O
PC10	CVDT8	CVD
	ERXD1	Ethernet
	RPC10	PPS
	IOCC10	Change Notification
	RC10	Port I/O
PC11	CVDT9	CVD
	ERXD0	Ethernet
	RPC11	PPS
	IOCC11	Change Notification
	RC11	Port I/O
PC12	CVDT10	CVD
	ETH_CLK_OUT	Clock/Ethernet
	ERXCLK	Ethernet
	RPC12	PPS
	IOCC12	Change Notification
	RC12	Port I/O
PC13	CVDT11	CVD
	ETXEN	Ethernet
	RPC13	PPS
	IOCC13	Change Notification
	RC13	Port I/O
PC14	CVDT12	CVD
	ETXD1	Ethernet
	RPC14	PPS
	IOCC14	Change Notification
	RC14	Port I/O
PC15	CVDT13	CVD
	ETXD0	Ethernet
	RPC15	PPS
	IOCC15	Change Notification
	RC15	Port I/O

 © 2020 Microchip Technology Inc.

TABLE 13-7: PRIORITY FOR DEVICE PIN PK(N) (N = 0-15)

Pin Name	Functions in Priority Order	Reference Peripheral
PK0	RF_FE_3	Wi-Fi®
	RPK0	PPS
	IOCK0	Change Notification
	RK0	Port I/O
PK1	RF_FE_4	Wi-Fi®
	RPK1	PPS
	IOCK1	Change Notification
	RK1	Port I/O
PK2	RF_FE_1	Wi-Fi®
	AN19	ADC
	CVD19	CVD
	CVDR19	CVD
	RPK2	PPS
	IOCK2	Change Notification
	RK2	Port I/O
PK3	RF_FE_2	Wi-Fi®
	AN18	ADC
	CVD18	CVD
	CVDR18	CVD
	RPK3	PPS
	IOCK3	Change Notification
	RK3	Port I/O
PK4	VREGCTRL0	Wi-Fi®
	BT_CLK_OUT	Oscillator
	SCANDIAG8	ATPG Scan
	RPK4	PPS
	IOCK4	Change Notification
	RK4	Port I/O
PK5	VREGCTRL1	Wi-Fi®
	PTA_WLAN_ACTIVE	Wi-Fi®
	RPK5	PPS
	IOCK5	Change Notification
	RK5	Port I/O
PK6	PTA_BT_PRIO	Wi-Fi®
	RPK6	PPS
	IOCK6	Change Notification
	RK6	Port I/O
PK7	PTA_BT_ACTIVE	Wi-Fi®
	RPK7	PPS
	IOCK7	Change Notification
	RK7	Port I/O

TABLE 13-7: PRIORITY FOR DEVICE PIN PK(N) (N = 0-15) (CONTINUED)

Pin Name	Functions in Priority Order	Reference Peripheral
PK8	RF_FE_7	Wi-Fi®
	RPK8	PPS
	IOCK8	Change Notification
	RK8	Port I/O
PK9	RF_FE_8	Wi-Fi®
	RPK9	PPS
	IOCK9	Change Notification
	RK9	Port I/O
PK10	RF_FE_6	Wi-Fi®
	RPK10	PPS
	IOCK10	Change Notification
	RK10	Port I/O
PK11	RF_FE_5	Wi-Fi®
	RPK11	PPS
	IOCK11	Change Notification
	RK11	Port I/O
PK12	CVDT14	CVD
	ERXDV	Ethernet
	RPK12	PPS
	IOCK12	Change Notification
	RK12	Port I/O
PK13	CVDT15	CVD
	EMDIO	Ethernet
	RPK13	PPS
	IOCK13	Change Notification
	RK13	Port I/O
PK14	CVDT16	CVD
	EMDC	Ethernet
	RPK14	PPS
	IOCK14	Change Notification
	RK14	Port I/O
PK15	SOSCO	Secondary Oscillator Output
	RPK15	Port Input Only

 © 2020 Microchip Technology Inc.

13.6 I/O Ports Control Registers

TABLE 13-8: PERIPHERAL PIN SELECT OUTPUT REGISTER MAP

Virtual Address (BF80_#)	Register Name(1)	Bit Range	Bits																All Resets
			31/15	30/14	29/13	28/12	27/11	26/10	25/9	24/8	23/7	22/6	21/5	20/4	19/3	18/2	17/1	16/0	
1A00	RPA0R	31:16	—	—	—	—	—	—	—	—	—	—	—	—	—	—	—	—	0000
		15:0	—	—	—	—	—	—	—	—	—	—	—	RPA0R<4:0>					0000
1A04	RPA1R	31:16	—	—	—	—	—	—	—	—	—	—	—	—	—	—	—	—	0000
		15:0	—	—	—	—	—	—	—	—	—	—	—	RPA1R<4:0>					0000
1A08	RPA2R	31:16	—	—	—	—	—	—	—	—	—	—	—	—	—	—	—	—	0000
		15:0	—	—	—	—	—	—	—	—	—	—	—	RPA2R<4:0>					0000
1A0C	RPA3R	31:16	—	—	—	—	—	—	—	—	—	—	—	—	—	—	—	—	0000
		15:0	—	—	—	—	—	—	—	—	—	—	—	RPA3R<4:0>					0000
1A10	RPA4R	31:16	—	—	—	—	—	—	—	—	—	—	—	—	—	—	—	—	0000
		15:0	—	—	—	—	—	—	—	—	—	—	—	RPA4R<4:0>					0000
1A14	RPA5R	31:16	—	—	—	—	—	—	—	—	—	—	—	—	—	—	—	—	0000
		15:0	—	—	—	—	—	—	—	—	—	—	—	RPA5R<4:0>					0000
1A28	RPA10R	31:16	—	—	—	—	—	—	—	—	—	—	—	—	—	—	—	—	0000
		15:0	—	—	—	—	—	—	—	—	—	—	—	RPA10R<4:0>					0000
1A2C	RPA11R	31:16	—	—	—	—	—	—	—	—	—	—	—	—	—	—	—	—	0000
		15:0	—	—	—	—	—	—	—	—	—	—	—	RPA11R<4:0>					0000
1A30	RPA12R	31:16	—	—	—	—	—	—	—	—	—	—	—	—	—	—	—	—	0000
		15:0	—	—	—	—	—	—	—	—	—	—	—	RPA12R<4:0>					0000
1A34	RPA13R	31:16	—	—	—	—	—	—	—	—	—	—	—	—	—	—	—	—	0000
		15:0	—	—	—	—	—	—	—	—	—	—	—	RPA13R<4:0>					0000
1A38	RPA14R	31:16	—	—	—	—	—	—	—	—	—	—	—	—	—	—	—	—	0000
		15:0	—	—	—	—	—	—	—	—	—	—	—	RPA14R<4:0>					0000
1A3C	RPA15R	31:16	—	—	—	—	—	—	—	—	—	—	—	—	—	—	—	—	0000
		15:0	—	—	—	—	—	—	—	—	—	—	—	RPA15R<4:0>					0000

Legend: x = Unknown value on Reset; — = Unimplemented, read as '0'; Reset values are shown in hexadecimal.

© 2020 Microchip Technology Inc.

TABLE 13-8: PERIPHERAL PIN SELECT OUTPUT REGISTER MAP (CONTINUED)

Virtual Address (BF80_#)	Register Name(1)	Bit Range	Bits															All Resets
			31/15	30/14	29/13	28/12	27/11	26/10	25/9	24/8	23/7	22/6	21/5	20/4	19/3	18/2	17/1	16/0	
1A40h	RPB0R	31:16	—	—	—	—	—	—	—	—	—	—	—	—	—	—	—	—	0000
		15:0	—	—	—	—	—	—	—	—	—	—	—	RPB0R<4:0>					0000
1A44	RPB1R	31:16	—	—	—	—	—	—	—	—	—	—	—	—	—	—	—	—	0000
		15:0	—	—	—	—	—	—	—	—	—	—	—	RPB1R<4:0>					0000
1A48	RPB2R	31:16	—	—	—	—	—	—	—	—	—	—	—	—	—	—	—	—	0000
		15:0												RPB2R<4:0>					0000
1A4C	RPB3R	31:16	—	—	—	—	—	—	—	—	—	—	—	—	—	—	—	—	0000
		15:0	—	—	—	—	—	—	—	—	—	—	—	RPB3R<4:0>					0000
1A50	RPB4R	31:16	—	—	—	—	—	—	—	—	—	—	—	—	—	—	—	—	0000
		15:0	—	—	—	—	—	—	—	—	—	—	—	RPB4R<4:0>					0000
1A54	RPB5R	31:16	—	—	—	—	—	—	—	—	—	—	—	—	—	—	—	—	0000
		15:0												RPB5R<4:0>					0000
1A58	RPB6R	31:16	—	—	—	—	—	—	—	—	—	—	—	—	—	—	—	—	0000
		15:0												RPB6R<4:0>					0000
1A5C	RPB7R	31:16	—	—	—	—	—	—	—	—	—	—	—	—	—	—	—	—	0000
		15:0												RPB7R<4:0>					0000
1A60	RPB8R	31:16	—	—	—	—	—	—	—	—	—	—	—	—	—	—	—	—	0000
		15:0												RPB8R<4:0>					0000
1A64	RPB9R	31:16	—	—	—	—	—	—	—	—	—	—	—	—	—	—	—	—	0000
		15:0												RPB9R<4:0>					0000
1A68	RPB10R	31:16	—	—	—	—	—	—	—	—	—	—	—	—	—	—	—	—	0000
		15:0												RPB10R<4:0>					0000
1A6C	RPB11R	31:16	—	—	—	—	—	—	—	—	—	—	—	—	—	—	—	—	0000
		15:0	—	—	—	—	—	—	—	—	—	—	—	RPB11R<4:0>					0000

Legend: x = Unknown value on Reset; — = Unimplemented, read as '0'; Reset values are shown in hexadecimal.

© 2020 Microchip Technology Inc.

TABLE 13-8: PERIPHERAL PIN SELECT OUTPUT REGISTER MAP (CONTINUED)

Virtual Address (BF80_#)	Register Name(1)	Bit Range	Bits																All Resets
			31/15	30/14	29/13	28/12	27/11	26/10	25/9	24/8	23/7	22/6	21/5	20/4	19/3	18/2	17/1	16/0	
1A70	RPB12R	31:16	—	—	—	—	—	—	—	—	—	—	—	—	—	—	—	—	0000
		15:0	—	—	—	—	—	—	—	—	—	—	—	RPB12R<4:0>					0000
1A74	RPB13R	31:16	—	—	—	—	—	—	—	—	—	—	—	—	—	—	—	—	0000
		15:0	—	—	—	—	—	—	—	—	—	—	—	RPB13R<4:0>					0000
1A78	RPB14R	31:16	—	—	—	—	—	—	—	—	—	—	—	—	—	—	—	—	0000
		15:0	—	—	—	—	—	—	—	—	—	—	—	RPB14R<4:0>					0000
1A80	RPC0R	31:16	—	—	—	—	—	—	—	—	—	—	—	—	—	—	—	—	0000
		15:0	—	—	—	—	—	—	—	—	—	—	—	RPC0R<4:0>					0000
1A84	RPC1R	31:16	—	—	—	—	—	—	—	—	—	—	—	—	—	—	—	—	0000
		15:0	—	—	—	—	—	—	—	—	—	—	—	RPC1R<4:0>					0000
1A88	RPC2R	31:16	—	—	—	—	—	—	—	—	—	—	—	—	—	—	—	—	0000
		15:0	—	—	—	—	—	—	—	—	—	—	—	RPC2R<4:0>					0000
1A8C	RPC3R	31:16	—	—	—	—	—	—	—	—	—	—	—	—	—	—	—	—	0000
		15:0	—	—	—	—	—	—	—	—	—	—	—	RPC3R<4:0>					0000
1A90	RPC4R	31:16	—	—	—	—	—	—	—	—	—	—	—	—	—	—	—	—	0000
		15:0	—	—	—	—	—	—	—	—	—	—	—	RPC4R<4:0>					0000
1A94	RPC5R	31:16	—	—	—	—	—	—	—	—	—	—	—	—	—	—	—	—	0000
		15:0	—	—	—	—	—	—	—	—	—	—	—	RPC5R<4:0>					0000
1A98	RPC6R	31:16	—	—	—	—	—	—	—	—	—	—	—	—	—	—	—	—	0000
		15:0	—	—	—	—	—	—	—	—	—	—	—	RPC6R<4:0>					0000
1A9C	RPC7R	31:16	—	—	—	—	—	—	—	—	—	—	—	—	—	—	—	—	0000
		15:0	—	—	—	—	—	—	—	—	—	—	—	RPC7R<4:0>					0000
1AA0	RPC8R	31:16	—	—	—	—	—	—	—	—	—	—	—	—	—	—	—	—	0000
		15:0	—	—	—	—	—	—	—	—	—	—	—	RPC8R<4:0>					0000

Legend: x = Unknown value on Reset; — = Unimplemented, read as '0'; Reset values are shown in hexadecimal.

© 2020 Microchip Technology Inc.

TABLE 13-8: PERIPHERAL PIN SELECT OUTPUT REGISTER MAP (CONTINUED)

Virtual Address (BF80_#)	Register Name(1)	Bit Range	Bits															All Resets
			31/15	30/14	29/13	28/12	27/11	26/10	25/9	24/8	23/7	22/6	21/5	20/4	19/3	18/2	17/1	16/0	
1AA4	RPC9R	31:16	—	—	—	—	—	—	—	—	—	—	—	—	—	—	—	—	0000
		15:0	—	—	—	—	—	—	—	—	—	—	—	RPC9R<4:0>					0000
1AA8	RPC10R	31:16	—	—	—	—	—	—	—	—	—	—	—	—	—	—	—	—	0000
		15:0	—	—	—	—	—	—	—	—	—	—	—	RPC10R<4:0>					0000
1AAC	RPC11R	31:16	—	—	—	—	—	—	—	—	—	—	—	—	—	—	—	—	0000
		15:0	—	—	—	—	—	—	—	—	—	—	—	RPC11R<4:0>					0000
1AB0	RPC12R	31:16	—	—	—	—	—	—	—	—	—	—	—	—	—	—	—	—	0000
		15:0	—	—	—	—	—	—	—	—	—	—	—	RPC12R<4:0>					0000
1AB4	RPC13R	31:16	—	—	—	—	—	—	—	—	—	—	—	—	—	—	—	—	0000
		15:0	—	—	—	—	—	—	—	—	—	—	—	RPC13R<4:0>					0000
1AB8	RPC14R	31:16	—	—	—	—	—	—	—	—	—	—	—	—	—	—	—	—	0000
		15:0	—	—	—	—	—	—	—	—	—	—	—	RPC14R<4:0>					0000
1ABC	RPC15R	31:16	—	—	—	—	—	—	—	—	—	—	—	—	—	—	—	—	0000
		15:0	—	—	—	—	—	—	—	—	—	—	—	RPC15R<4:0>					0000
1AC0	RPK0R	31:16	—	—	—	—	—	—	—	—	—	—	—	—	—	—	—	—	0000
		15:0	—	—	—	—	—	—	—	—	—	—	—	RPK0R<4:0>					0000
1AC4	RPK1R	31:16	—	—	—	—	—	—	—	—	—	—	—	—	—	—	—	—	0000
		15:0	—	—	—	—	—	—	—	—	—	—	—	RPK1R<4:0>					0000
1AC8	RPK2R	31:16	—	—	—	—	—	—	—	—	—	—	—	—	—	—	—	—	0000
		15:0	—	—	—	—	—	—	—	—	—	—	—	RPK2R<4:0>					0000
1ACC	RPK3R	31:16	—	—	—	—	—	—	—	—	—	—	—	—	—	—	—	—	0000
		15:0	—	—	—	—	—	—	—	—	—	—	—	RPK3R<4:0>					0000
1AD0	RPK4R	31:16	—	—	—	—	—	—	—	—	—	—	—	—	—	—	—	—	0000
		15:0	—	—	—	—	—	—	—	—	—	—	—	RPK4R<4:0>					0000

Legend: x = Unknown value on Reset; — = Unimplemented, read as '0'; Reset values are shown in hexadecimal.

© 2020 Microchip Technology Inc.

TABLE 13-8: PERIPHERAL PIN SELECT OUTPUT REGISTER MAP (CONTINUED)

Virtual Address (BF80_#)	Register Name(1)	Bit Range	Bits															All Resets
			31/15	30/14	29/13	28/12	27/11	26/10	25/9	24/8	23/7	22/6	21/5	20/4	19/3	18/2	17/1	16/0	
1AD4	RPK5R	31:16	—	—	—	—	—	—	—	—	—	—	—	—	—	—	—	—	0000
		15:0	—	—	—	—	—	—	—	—	—	—	—	RPK5R<4:0>					0000
1AD8	RPK6R	31:16	—	—	—	—	—	—	—	—	—	—	—	—	—	—	—	—	0000
		15:0	—	—	—	—	—	—	—	—	—	—	—	RPK6R<4:0>					0000
1ADC	RPK7R	31:16	—	—	—	—	—	—	—	—	—	—	—	—	—	—	—	—	0000
		15:0	—	—	—	—	—	—	—	—	—	—	—	RPK7R<4:0>					0000
1AE0	RPK8R	31:16	—	—	—	—	—	—	—	—	—	—	—	—	—	—	—	—	0000
		15:0	—	—	—	—	—	—	—	—	—	—	—	RPK8R<4:0>					0000
1AE4	RPK9R	31:16	—	—	—	—	—	—	—	—	—	—	—	—	—	—	—	—	0000
		15:0	—	—	—	—	—	—	—	—	—	—	—	RPK9R<4:0>					0000
1AE8	RPK10R	31:16	—	—	—	—	—	—	—	—	—	—	—	—	—	—	—	—	0000
		15:0	—	—	—	—	—	—	—	—	—	—	—	RPK10R<4:0>					0000
1AEC	RPK11R	31:16	—	—	—	—	—	—	—	—	—	—	—	—	—	—	—	—	0000
		15:0	—	—	—	—	—	—	—	—	—	—	—	RPK11R<4:0>					0000
1AF0	RPK12R	31:16	—	—	—	—	—	—	—	—	—	—	—	—	—	—	—	—	0000
		15:0	—	—	—	—	—	—	—	—	—	—	—	RPK12R<4:0>					0000
1AF4	RPK13R	31:16	—	—	—	—	—	—	—	—	—	—	—	—	—	—	—	—	0000
		15:0	—	—	—	—	—	—	—	—	—	—	—	RPK13R<4:0>					0000
1AF8	RPK14R	31:16	—	—	—	—	—	—	—	—	—	—	—	—	—	—	—	—	0000
		15:0	—	—	—	—	—	—	—	—	—	—	—	RPK14R<4:0>					0000

Legend: x = Unknown value on Reset; — = Unimplemented, read as '0'; Reset values are shown in hexadecimal.

© 2020 Microchip Technology Inc.

TABLE 13-9: PERIPHERAL PIN SELECT INPUT REGISTER MAP

Virtual Address (BF80_#)	Register Name(1)	Bit Range	Bits															All Resets
			31/15	30/14	29/13	28/12	27/11	26/10	25/9	24/8	23/7	22/6	21/5	20/4	19/3	18/2	17/1	16/0	
1800	INT0R	31:16	—	—	—	—	—	—	—	—	—	—	—	—	—	—	—	—	00000
		15:0	—	—	—	—	—	—	—	—	—	—	—	—	INT0R<3:0>				00000
1804	INT1R	31:16	—	—	—	—	—	—	—	—	—	—	—	—	—	—	—	—	00000
		15:0	—	—	—	—	—	—	—	—	—	—	—	—	INT1R<3:0>				00000
1808	INT2R	31:16	—	—	—	—	—	—	—	—	—	—	—	—	—	—	—	—	00000
		15:0	—	—	—	—	—	—	—	—	—	—	—	—	INT2R<3:0>				00000
180C	INT3R	31:16	—	—	—	—	—	—	—	—	—	—	—	—	—	—	—	—	00000
		15:0	—	—	—	—	—	—	—	—	—	—	—	—	INT3R<3:0>				00000
1810	INT4R	31:16	—	—	—	—	—	—	—	—	—	—	—	—	—	—	—	—	00000
		15:0	—	—	—	—	—	—	—	—	—	—	—	—	INT4R<3:0>I				00000
1814	T1CKR	31:16	—	—	—	—	—	—	—	—	—	—	—	—	—	—	—	—	00000
		15:0	—	—	—	—	—	—	—	—	—	—	—	—	T1CKR<3:0>				00000
1818	T2CKR	31:16	—	—	—	—	—	—	—	—	—	—	—	—	—	—	—	—	00000
		15:0	—	—	—	—	—	—	—	—	—	—	—	—	T2CKR<3:0>				00000
181C	T3CKR	31:16	—	—	—	—	—	—	—	—	—	—	—	—	—	—	—	—	00000
		15:0	—	—	—	—	—	—	—	—	—	—	—	—	T3CKR<3:0>				00000
1820	T4CKR	31:16	—	—	—	—	—	—	—	—	—	—	—	—	—	—	—	—	00000
		15:0	—	—	—	—	—	—	—	—	—	—	—	—	T4CKR<3:0>				00000
1824	T5CKR	31:16	—	—	—	—	—	—	—	—	—	—	—	—	—	—	—	—	00000
		15:0	—	—	—	—	—	—	—	—	—	—	—	—	T5CKR<3:0>				00000
1828	T6CKR	31:16	—	—	—	—	—	—	—	—	—	—	—	—	—	—	—	—	00000
		15:0	—	—	—	—	—	—	—	—	—	—	—	—	T6CKR<3:0>				00000

Legend: x = Unknown value on Reset; — = Unimplemented, read as '0'; Reset values are shown in hexadecimal.

© 2020 Microchip Technology Inc.

TABLE 13-9: PERIPHERAL PIN SELECT INPUT REGISTER MAP (CONTINUED)

Virtual Address (BF80_#)	Register Name(1)	Bit Range	Bits																All Resets
			31/15	30/14	29/13	28/12	27/11	26/10	25/9	24/8	23/7	22/6	21/5	20/4	19/3	18/2	17/1	16/0	
182C	T7CKR	31:16	—	—	—	—	—	—	—	—	—	—	—	—	—	—	—	—	00000
		15:0	—	—	—	—	—	—	—	—	—	—	—	—	T7CKR<3:0>				00000
1838	IC1R	31:16	—	—	—	—	—	—	—	—	—	—	—	—	—	—	—	—	00000
		15:0	—	—	—	—	—	—	—	—	—	—	—	—	IC1R<4:0>				00000
183C	IC2R	31:16	—	—	—	—	—	—	—	—	—	—	—	—	—	—	—	—	00000
		15:0	—	—	—	—	—	—	—	—	—	—	—	—	IC2R<4:0>				00000
1840	IC3R	31:16	—	—	—	—	—	—	—	—	—	—	—	—	—	—	—	—	00000
		15:0	—	—	—	—	—	—	—	—	—	—	—	—	IC3R<4:0>				00000
1844	IC4R	31:16	—	—	—	—	—	—	—	—	—	—	—	—	—	—	—	—	00000
		15:0	—	—	—	—	—	—	—	—	—	—	—	—	IC4R<4:0>				00000
185C	OCFAR	31:16	—	—	—	—	—	—	—	—	—	—	—	—	—	—	—	—	00000
		15:0	—	—	—	—	—	—	—	—	—	—	—	—	OCFAR<4:0>				00000
1860	OCFBR	31:16	—	—	—	—	—	—	—	—	—	—	—	—	—	—	—	—	00000
		15:0	—	—	—	—	—	—	—	—	—	—	—	—	OCFBR<4:0>				00000
1864	OCFCR	31:16	—	—	—	—	—	—	—	—	—	—	—	—	—	—	—	—	00000
		15:0	—	—	—	—	—	—	—	—	—	—	—	—	OCFCR<4:0>				00000
1868	OCFDR	31:16	—	—	—	—	—	—	—	—	—	—	—	—	—	—	—	—	00000
		15:0	—	—	—	—	—	—	—	—	—	—	—	—	OCFDR<4:0>				00000
186C	U1RXR	31:16	—	—	—	—	—	—	—	—	—	—	—	—	—	—	—	—	00000
		15:0	—	—	—	—	—	—	—	—	—	—	—	—	U1RXR<4:0>				00000
1870	U1CTSR	31:16	—	—	—	—	—	—	—	—	—	—	—	—	—	—	—	—	00000
		15:0	—	—	—	—	—	—	—	—	—	—	—	—	U1CTSR<4:0>				00000
1874	U2RXR	31:16	—	—	—	—	—	—	—	—	—	—	—	—	—	—	—	—	00000
		15:0	—	—	—	—	—	—	—	—	—	—	—	—	U2RXR<4:0>				00000

Legend: x = Unknown value on Reset; — = Unimplemented, read as '0'; Reset values are shown in hexadecimal.

© 2020 Microchip Technology Inc.

TABLE 13-9: PERIPHERAL PIN SELECT INPUT REGISTER MAP (CONTINUED)

Virtual Address (BF80_#)	Register Name(1)	Bit Range	Bits																All Resets
			31/15	30/14	29/13	28/12	27/11	26/10	25/9	24/8	23/7	22/6	21/5	20/4	19/3	18/2	17/1	16/0	
1878	U2CTSR	31:16	—	—	—	—	—	—	—	—	—	—	—	—	—	—	—	—	00000
		15:0	—	—	—	—	—	—	—	—	—	—	—	—	U2CTSR<4:0>				00000
187C	U3RXR	31:16	—	—	—	—	—	—	—	—	—	—	—	—	—	—	—	—	00000
		15:0	—	—	—	—	—	—	—	—	—	—	—	—	U3RXR<4:0>				00000
1880	U3CTSR	31:16	—	—	—	—	—	—	—	—	—	—	—	—	—	—	—	—	00000
		15:0	—	—	—	—	—	—	—	—	—	—	—	—	U3CTSR<4:0>				00000
188C	PTG30R	31:16	—	—	—	—	—	—	—	—	—	—	—	—	—	—	—	—	00000
		15:0	—	—	—	—	—	—	—	—	—	—	—	—	PTG30R<4:0>				00000
1890	PTG31R	31:16	—	—	—	—	—	—	—	—	—	—	—	—	—	—	—	—	00000
		15:0	—	—	—	—	—	—	—	—	—	—	—	—	PTG31R<4:0>				00000
1898	SDI1R	31:16	—	—	—	—	—	—	—	—	—	—	—	—	—	—	—	—	00000
		15:0	—	—	—	—	—	—	—	—	—	—	—	—	SDI1R<4:0>				00000
189C	SS1INR	31:16	—	—	—	—	—	—	—	—	—	—	—	—	—	—	—	—	00000
		15:0	—	—	—	—	—	—	—	—	—	—	—	—	SS1INR<4:0>				00000
18A4	SDI2R	31:16	—	—	—	—	—	—	—	—	—	—	—	—	—	—	—	—	00000
		15:0	—	—	—	—	—	—	—	—	—	—	—	—	SDI2R<4:0>				00000
18A8	SS2INR	31:16	—	—	—	—	—	—	—	—	—	—	—	—	—	—	—	—	00000
		15:0	—	—	—	—	—	—	—	—	—	—	—	—	SS2INR<4:0>				00000
18C4	C1RXR	31:16	—	—	—	—	—	—	—	—	—	—	—	—	—	—	—	—	00000
		15:0	—	—	—	—	—	—	—	—	—	—	—	—	C1RXR<4:0>				00000
18C8	C2RXR	31:16	—	—	—	—	—	—	—	—	—	—	—	—	—	—	—	—	00000
		15:0	—	—	—	—	—	—	—	—	—	—	—	—	C2RXR<4:0>				00000
18CC	REFIR	31:16	—	—	—	—	—	—	—	—	—	—	—	—	—	—	—	—	00000
		15:0	—	—	—	—	—	—	—	—	—	—	—	—	REFIR<4:0>				00000

Legend: x = Unknown value on Reset; — = Unimplemented, read as '0'; Reset values are shown in hexadecimal.

© 2020 Microchip Technology Inc.

TABLE 13-9: PERIPHERAL PIN SELECT INPUT REGISTER MAP (CONTINUED)

Virtual Address (BF80_#)	Register Name(1)	Bit Range	Bits															All Resets
			31/15	30/14	29/13	28/12	27/11	26/10	25/9	24/8	23/7	22/6	21/5	20/4	19/3	18/2	17/1	16/0	
1974	ECOLR	31:16	—	—	—	—	—	—	—	—	—	—	—	—	—	—	—	—	00000
		15:0	—	—	—	—	—	—	—	—	—	—	—	—	ECOLR<4:0>				00000
1978	ECRSR	31:16	—	—	—	—	—	—	—	—	—	—	—	—	—	—	—	—	00000
		15:0	—	—	—	—	—	—	—	—	—	—	—	—	ECRSR<4:0>				00000
197C	ETXCLKR	31:16	—	—	—	—	—	—	—	—	—	—	—	—	—	—	—	—	00000
		15:0	—	—	—	—	—	—	—	—	—	—	—	—	ETXCLKR<4:0>				00000
1980	ERXD3R	31:16	—	—	—	—	—	—	—	—	—	—	—	—	—	—	—	—	00000
		15:0	—	—	—	—	—	—	—	—	—	—	—	—	ERXD3R<4:0>				00000
1984	ERXD2R	31:16	—	—	—	—	—	—	—	—	—	—	—	—	—	—	—	—	00000
		15:0	—	—	—	—	—	—	—	—	—	—	—	—	ERXD2R<4:0>				00000

Legend: x = Unknown value on Reset; — = Unimplemented, read as '0'; Reset values are shown in hexadecimal.

© 2020 Microchip Technology Inc.

TABLE 13-10: PORTA REGISTER MAP

Virtual Address (BF82_#)	Register Name(1)	Bit Range	Bits																All Resets
			31/15	30/14	29/13	28/12	27/11	26/10	25/9	24/8	23/7	22/6	21/5	20/4	19/3	18/2	17/1	16/0	
0000	ANSELA	31:16	—	—	—	—	—	—	—	—	—	—	—	—	—	—	—	—	0000
		15:0	ANSA15	ANSA14	ANSA13	ANSA12	—	ANSA10	—	—	—	—	—	—	—	—	—	—	0000
0010	TRISA	31:16	—	—	—	—	—	—	—	—	—	—	—	—	—	—	—	—	0000
		15:0	TRISA15	TRISA14	TRISA13	TRISA12	TRISA11	TRISA10	TRISA9	TRISA8	TRISA7	TRISA6	TRISA5	TRISA4	TRISA3	TRISA2	TRISA1	TRISA0	0000
0020	PORTA	31:16	—	—	—	—	—	—	—	—	—	—	—	—	—	—	—	—	0000
		15:0	RA15	RA14	RA13	RA12	RA11	RA10	RA9	RA8	RA7	RA6	RA5	RA4	RA3	RA2	RA1	RA0	0000
0030	LATA	31:16	—	—	—	—	—	—	—	—	—	—	—	—	—	—	—	—	0000
		15:0	LATA15	LATA14	LATA13	LATA12	LATA11	LATA10	LATA9	LATA8	LATA7	LATA6	LATA5	LATA4	LATA3	LATA2	LATA1	LATA0	0000
0040	ODCA	31:16	—	—	—	—	—	—	—	—	—	—	—	—	—	—	—	—	0000
		15:0	ODCA15	ODCA14	ODCA13	ODCA12	ODCA11	ODCA10	ODCA9	ODCA8	ODCA7	ODCA6	ODCA5	ODCA4	ODCA3	ODCA2	ODCA1	ODCA0	0000
0050	CNPUA	31:16	—	—	—	—	—	—	—	—	—	—	—	—	—	—	—	—	0000
		15:0	CNPUA15	CNPUA14	CNPUA13	CNPUA12	CNPUA11	CNPUA10	CNPUA9	CNPUA8	CNPUA7	CNPUA6	CNPUA5	CNPUA4	CNPUA3	CNPUA2	CNPUA1	CNPUA0	0000
0060	CNPDA	31:16	—	—	—	—	—	—	—	—	—	—	—	—	—	—	—	—	0000
		15:0	CNPDA15	CNPDA14	CNPDA13	CNPDA12	CNPDA11	CNPDA10	CNPDA9	CNPDA8	CNPDA7	CNPDA6	CNPDA5	CNPDA4	CNPDA3	CNPDA2	CNPDA1	CNPDA0	0000
0070	CNCONA	31:16	—	—	—	—	—	—	—	—	—	—	—	—	—	—	—	—	0000
		15:0	ON	—	—	—	EDGEDE-TECT	—	—	—	—	—	—	—	—	—	—	—	0000
0080	CNENA	31:16	—	—	—	—	—	—	—	—	—	—	—	—	—	—	—	—	0000
		15:0	CNIEA15	CNIEA14	CNIEA13	CNIEA12	CNIEA11	CNIEA10	CNIEA9	CNIEA8	CNIEA7	CNIEA6	CNIEA5	CNIEA4	CNIEA3	CNIEA2	CNIEA1	CNIEA0	0000
0090	CNSTATA	31:16	—	—	—	—	—	—	—	—	—	—	—	—	—	—	—	—	0000
		15:0	CNSTA-TA15	CNSTA-TA14	CNSTATA13	CNSTA-TA12	CNSTA-TA11	CNSTA-TA10	CNSTA-TA9	CNSTATA8	CNSTATA7	CNSTA-TA6	CNSTA-TA5	CNSTATA4	CNSTA-TA3	CNSTA-TA2	CNSTA-TA1	CNSTA-TA0	0000
00A0	CNNEA	31:16	—	—	—	—	—	—	—	—	—	—	—	—	—	—	—	—	0000
		15:0	CNNEA15	CNNEA14	CNNEA13	CNNEA12	CNNEA11	CNNEA10	CNNEA9	CNNEA8	CNNEA7	CNNEA6	CNNEA5	CNNEA4	CNNEA3	CNNEA2	CNNEA1	CNNEA0	0000

Legend: x = Unknown value on Reset; — = Unimplemented, read as '0'; Reset values are shown in hexadecimal.

Note 1: All registers in this table have corresponding CLR, SET and INV registers at its virtual address, plus an offset of 0x4, 0x8 and 0xC, respectively. See **Section 13.3 "CLR, SET, and INV Registers"** for more information.

© 2020 Microchip Technology Inc.

TABLE 13-10: PORTA REGISTER MAP (CONTINUED)

Virtual Address (BF82_#)	Register Name(1)	Bit Range	Bits																All Resets
			31/15	30/14	29/13	28/12	27/11	26/10	25/9	24/8	23/7	22/6	21/5	20/4	19/3	18/2	17/1	16/0	
00B0	CNFA	31:16	—	—	—	—	—	—	—	—	—	—	—	—	—	—	—	—	0000
		15:0	CNFA15	CNFA14	CNFA13	CNFA12	CNFA11	CNFA10	CNFA9	CNFA8	CNFA7	CNFA6	CNFA5	CNFA4	CNFA3	CNFA2	CNFA1	CNFA0	0000
00C0	SRCON0A	31:16	—	—	—	—	—	—	—	—	—	—	—	—	—	—	—	—	0000
		15:0	—	—	—	—	—	—	—	—	—	—	—	—	—	—	—	SR0A0	0000
00D0	SRCON1A	31:16	—	—	—	—	—	—	—	—	—	—	—	—	—	—	—	—	0000
		15:0	—	—	—	—	—	—	—	—	—	—	—	—	—	—	—	SR1A0	0000

Legend: x = Unknown value on Reset; — = Unimplemented, read as '0'; Reset values are shown in hexadecimal.

Note 1: All registers in this table have corresponding CLR, SET and INV registers at its virtual address, plus an offset of 0x4, 0x8 and 0xC, respectively. See **Section 13.3 "CLR, SET, and INV Registers"** for more information.

TABLE 13-11: PORTB REGISTER MAP

Virtual Address (BF82_#)	Register Name(1)	Bit Range	Bits																All Resets
			31/15	30/14	29/13	28/12	27/11	26/10	25/9	24/8	23/7	22/6	21/5	20/4	19/3	18/2	17/1	16/0	
0100	ANSELB	31:16	—	—	—	—	—	—	—	—	—	—	—	—	—	—	—	—	0000
		15:0	—	ANSB14	ANSB13	ANSB12	ANSB11	ANSB10	ANSB9	ANSB8	ANSB7	ANSB6	ANSB5	ANSB4	ANSB3	ANSB2	ANSB1	ANSB0	0000
0110	TRISB	31:16	—	—	—	—	—	—	—	—	—	—	—	—	—	—	—	—	0000
		15:0	TRISB15	TRISB14	TRISB13	TRISB12	TRISB11	TRISB10	TRISB9	TRISB8	TRISB7	TRISB6	TRISB5	TRISB4	TRISB3	TRISB2	TRISB1	TRISB0	0000
0120	PORTB	31:16	—	—	—	—	—	—	—	—	—	—	—	—	—	—	—	—	0000
		15:0	RB15	RB14	RB13	RB12	RB11	RB10	RB9	RB8	RB7	RB6	RB5	RB4	RB3	RB2	RB1	RB0	0000
0130	LATB	31:16	—	—	—	—	—	—	—	—	—	—	—	—	—	—	—	—	0000
		15:0	LATB15	LATB14	LATB13	LATB12	LATB11	LATB10	LATB9	LATB8	LATB7	LATB6	LATB5	LATB4	LATB3	LATB2	LATB1	LATB0	0000
0140	ODCB	31:16	—	—	—	—	—	—	—	—	—	—	—	—	—	—	—	—	0000
		15:0	—	ODCB14	ODCB13	ODCB12	ODCB11	ODCB10	ODCB9	ODCB8	ODCB7	ODCB6	ODCB5	ODCB4	ODCB3	ODCB2	ODCB1	ODCB0	0000

Legend: x = Unknown value on Reset; — = Unimplemented, read as '0'; Reset values are shown in hexadecimal.

Note 1: All registers in this table have corresponding CLR, SET and INV registers at its virtual address, plus an offset of 0x4, 0x8 and 0xC, respectively. See **Section 13.3 "CLR, SET, and INV Registers"** for more information.

© 2020 Microchip Technology Inc.

TABLE 13-11: PORTB REGISTER MAP (CONTINUED)

Virtual Address (BF82_#)	Register Name(1)	Bit Range	Bits																All Resets
			31/15	30/14	29/13	28/12	27/11	26/10	25/9	24/8	23/7	22/6	21/5	20/4	19/3	18/2	17/1	16/0	
0150	CNPUB	31:16	—	—	—	—	—	—	—	—	—	—	—	—	—	—	—	—	0000
		15:0	—	CNPUE14	CNPUB13	CNPUB12	CNPUB11	CNPUB10	CNPJB9	CNPUB8	CNPUB7	CNPUB6	CNPUB5	CNPUB4	CNPUB3	CNPUB2	CNPUB1	CNPUB0	0000
0160	CNPDB	31:16	—	—	—	—	—	—	—	—	—	—	—	—	—	—	—	—	0000
		15:0	—	CNPDE14	CNPDB13	CNPDB12	CNPDB11	CNPDB10	CNPDB9	CNPDB8	CNPDB7	CNPDB6	CNPDB5	CNPDB4	CNPDB3	CNPDB2	CNPDB1	CNPDB0	0000
0170	CNCONB	31:16	—	—	—	—	—	—	—	—	—	—	—	—	—	—	—	—	0000
		15:0	ON	—	—	—	EDGEDE-TECT	—	—	—	—	—	—	—	—	—	—	—	0000
0180	CNENB	31:16	—	—	—	—	—	—	—	—	—	—	—	—	—	—	—	—	0000
		15:0	—	CNIEB14	CNIEB13	CNIEB12	CNIEB11	CNIEB10	CNIEB9	CNIEB8	CNIEB7	CNIEB6	CNIEB5	CNIEB4	CNIEB3	CNIEB2	CNIEB1	CNIEB0	0000
0190	CNSTATB	31:16	—	—	—	—	—	—	—	—	—	—	—	—	—	—	—	—	0000
		15:0	—	CNSTATB14	CNSTATB13	CNSTATB12	CNSTATB11	CNSTATB10	CNSTATB9	CNSTATB8	CNSTATB7	CNSTATB6	CNSTATB5	CNSTATB4	CNSTATB3	CNSTATB2	CNSTATB1	CNSTATB0	0000
01A0	CNNEB	31:16	—	—	—	—	—	—	—	—	—	—	—	—	—	—	—	—	0000
		15:0	—	CNNEE14	CNNEB13	CNNEB12	CNNEB11	CNNEB10	CNNEB9	CNNEB8	CNNEB7	CNNEB6	CNNEB5	CNNEB4	CNNEB3	CNNEB2	CNNEB1	CNNEB0	0000
01B0	CNFB	31:16	—	—	—	—	—	—	—	—	—	—	—	—	—	—	—	—	0000
		15:0	—	CNFB14	CNFB13	CNFB12	CNFB11	CNFB10	CNFB9	CNFB8	CNFB7	CNFB6	CNFB5	CNFB4	CNFB3	CNFB2	CNFB1	CNFB0	0000

Legend: x = Unknown value on Reset; — = Unimplemented, read as '0'; Reset values are shown in hexadecimal.

Note 1: All registers in this table have corresponding CLR, SET and INV registers at its virtual address, plus an offset of 0x4, 0x8 and 0xC, respectively. See **Section 13.3 "CLR, SET, and INV Registers"** for more information.

© 2020 Microchip Technology Inc.

TABLE 13-12: PORTC REGISTER MAP

Virtual Address (BF82_#)	Register Name(1)	Bit Range	Bits																All Resets
			31/15	30/14	29/13	28/12	27/11	26/10	25/9	24/8	23/7	22/6	21/5	20/4	19/3	18/2	17/1	16/0	
0210	TRISC	31:16	—	—	—	—	—	—	—	—	—	—	—	—	—	—	—	—	0000
		15:0	TRISC15	TRISC14	TRISC13	TRISC12	TRISC11	TRISC10	TRISC9	TRISC8	TRISC7	TRISC6	TRISC5	TRISC4	TRISC3	TRISC2	TRISC1	TRISC0	0000
0220	PORTC	31:16	—	—	—	—	—	—	—	—	—	—	—	—	—	—	—	—	0000
		15:0	RC15	RC14	RC13	RC12	RC11	RC10	RC9	RC8	RC7	RC6	RC5	RC4	RC3	RC2	RC1	RC0	0000
0230	LATC	31:16	—	—	—	—	—	—	—	—	—	—	—	—	—	—	—	—	0000
		15:0	LATC15	LATC14	LATC13	LATC12	LATC11	LATC10	LATC9	LATC8	LATC7	LATC6	LATC5	LATC4	LATC3	LATC2	LATC1	LATC0	0000
0240	ODCC	31:16	—	—	—	—	—	—	—	—	—	—	—	—	—	—	—	—	0000
		15:0	ODCC15	ODCC14	ODCC13	ODCC12	ODCC11	ODCC10	ODCC9	ODCC8	ODCC7	ODCC6	ODCC5	ODCC4	ODCC3	ODCC2	ODCC1	ODCC0	0000
0250	CNPUC	31:16	—	—	—	—	—	—	—	—	—	—	—	—	—	—	—	—	0000
		15:0	CNPUC15	CNPUC14	CNPUC13	CNPUC12	CNPUC11	CNPUC10	CNPUC9	CNPUC8	CNPUC7	CNPUC6	CNPUC5	CNPUC4	CNPUC3	CNPUC2	CNPUC1	CNPUC0	0000
0260	CNPDC	31:16	—	—	—	—	—	—	—	—	—	—	—	—	—	—	—	—	0000
		15:0	CNPDC15	CNPDC14	CNPDC13	CNPDC12	CNPDC11	CNPDC10	CNPDC9	CNPDC8	CNPDC7	CNPDC6	CNPDC5	CNPDC4	CNPDC3	CNPDC2	CNPDC1	CNPDC0	0000
0270	CNCONC	31:16	—	—	—	—	—	—	—	—	—	—	—	—	—	—	—	—	0000
		15:0	ON	—	—	—	EDGEDETECT	—	—	—	—	—	—	—	—	—	—	—	0000
0280	CNENC	31:16	—	—	—	—	—	—	—	—	—	—	—	—	—	—	—	—	0000
		15:0	CNIEC15	CNIEC14	CNIEC13	CNIEC12	CNIEC11	CNIEC10	CNIEC9	CNIEC8	CNIEC7	CNIEC6	CNIEC5	CNIEC4	CNIEC3	CNIEC2	CNIEC1	CNIEC0	0000
0290	CNSTATC	31:16	—	—	—	—	—	—	—	—	—	—	—	—	—	—	—	—	0000
		15:0	CNSTATC15	CNSTATC14	CNSTATC13	CNSTATC12	CNSTATC11	CNSTATC10	CNSTATC9	CNSTATC8	CNSTATC7	CNSTATC6	CNSTATC5	CNSTATC4	CNSTATC3	CNSTATC2	CNSTATC1	CNSTATC0	0000
02A0	CNNEC	31:16	—	—	—	—	—	—	—	—	—	—	—	—	—	—	—	—	0000
		15:0	CNNEC15	CNNEC14	CNNEC13	CNNEC12	CNNEC11	CNNEC10	CNNEC9	CNNEC8	CNNEC7	CNNEC6	CNNEC5	CNNEC4	CNNEC3	CNNEC2	CNNEC1	CNNEC0	0000
02B0	CNFC	31:16	—	—	—	—	—	—	—	—	—	—	—	—	—	—	—	—	0000
		15:0	CNFC15	CNFC14	CNFC13	CNFC12	CNFC11	CNFC10	CNFC9	CNFC8	CNFC7	CNFC6	CNFC5	CNFC4	CNFC3	CNFC2	CNFC1	CNFC0	0000

Legend: x = Unknown value on Reset; — = Unimplemented, read as '0'; Reset values are shown in hexadecimal.

Note 1: All registers in this table have corresponding CLR, SET and INV registers at its virtual address, plus an offset of 0x4, 0x8 and 0xC, respectively. See **Section 13.3 "CLR, SET, and INV Registers"** for more information.

© 2020 Microchip Technology Inc.

TABLE 13-12: PORTC REGISTER MAP (CONTINUED)

Virtual Address (BF82_#)	Register Name(1)	Bit Range	Bits																All Resets
			31/15	30/14	29/13	28/12	27/11	26/10	25/9	24/8	23/7	22/6	21/5	20/4	19/3	18/2	17/1	16/0	
02C0	SR0CON0C	31:16	—	—	—	—	—	—	—	—	—	—	—	—	—	—	—	—	0000
		15:0	SR0C15	SR0C14	SR0C13	—	—	—	—	—	—	—	SR0C5	SR0C4	SR0C3	SR0C2	SR0C1	SR0C0	0000
02D0	SR1CON1C	31:16	—	—	—	—	—	—	—	—	—	—	—	—	—	—	—	—	0000
		15:0	SR1C15	SR1C14	SR1C13	—	—	—	—	—	—	—	SR1C5	SR1C4	SR1C3	SR1C2	SR1C1	SR1C0	0000

Legend: x = Unknown value on Reset; — = Unimplemented, read as '0'; Reset values are shown in hexadecimal.

Note 1: All registers in this table have corresponding CLR, SET and INV registers at its virtual address, plus an offset of 0x4, 0x8 and 0xC, respectively. See **Section 13.3 "CLR, SET, and INV Registers"** for more information.

TABLE 13-13: PORTK REGISTER MAP

Virtual Address (BF82_#)	Register Name(1)	Bit Range	Bits																All Resets
			31/15	30/14	29/13	28/12	27/11	26/10	25/9	24/8	23/7	22/6	21/5	20/4	19/3	18/2	17/1	16/0	
0300	ANSELK	31:16	—	—	—	—	—	—	—	—	—	—	—	—	—	—	—	—	0000
		15:0	—	—	—	—	—	—	—	—	—	—	—	—	ANSK3	ANSK2	—	—	0000
0310	TRISK	31:16	—	—	—	—	—	—	—	—	—	—	—	—	—	—	—	—	0000
		15:0	TRISK15	TRISK14	TRISK13	TRISK12	TRISK11	TRISK10	TRISK9	TRISK8	TRISK7	TRISK6	TRISK5	TRISK4	TRISK3	TRISK2	TRISK1	TRISK0	0000
0320	PORTK	31:16	—	—	—	—	—	—	—	—	—	—	—	—	—	—	—	—	0000
		15:0	RK15	RK14	RK13	RK12	RK11	RK10	RK9	RK8	RK7	RK6	RK5	RK4	RK3	RK2	RK1	RK0	0000
0330	LATK	31:16	—	—	—	—	—	—	—	—	—	—	—	—	—	—	—	—	0000
		15:0	LATK15	LATK14	LATK13	LATK12	LATK11	LATK10	LATK9	LATK8	LATK7	LATK6	LATK5	LATK4	LATK3	LATK2	LATK1	LATK0	0000
0340	ODCK	31:16	—	—	—	—	—	—	—	—	—	—	—	—	—	—	—	—	0000
		15:0	—	ODCK14	ODCK13	ODCK12	ODCK11	ODCK10	ODCK9	ODCK8	ODCK7	ODCK6	ODCK5	ODCK4	ODCK3	ODCK2	ODCK1	ODCK0	0000

Legend: x = Unknown value on Reset; — = Unimplemented, read as '0'; Reset values are shown in hexadecimal.

Note 1: All registers in this table have corresponding CLR, SET and INV registers at its virtual address, plus an offset of 0x4, 0x8 and 0xC, respectively. See **Section 13.3 "CLR, SET, and INV Registers"** for more information.

© 2020 Microchip Technology Inc.

TABLE 13-13: PORTK REGISTER MAP (CONTINUED)

Virtual Address (BF82_#)	Register Name(1)	Bit Range	Bits															All Resets
			31/15	30/14	29/13	28/12	27/11	26/10	25/9	24/8	23/7	22/6	21/5	20/4	19/3	18/2	17/1	16/0	
0350	CNPUK	31:16	—	—	—	—	—	—	—	—	—	—	—	—	—	—	—	—	0000
		15:0	—	CNPUK14	CNPUK13	CNPUK12	CNPUK11	CNPUK10	CNPUK9	CNPUK8	CNPUK7	CNPUK6	CNPUK5	CNPUK4	CNPUK3	CNPUK2	CNPUK1	CNPUK0	0000
0360	CNPDK	31:16	—	—	—	—	—	—	—	—	—	—	—	—	—	—	—	—	0000
		15:0	—	CNPDK14	CNPDK13	CNPDK12	CNPDK11	CNPDK10	CNPDK9	CNPDK8	CNPDK7	CNPDK6	CNPDK5	CNPDK4	CNPDK3	CNPDK2	CNPDK1	CNPDK0	0000
0370	CNCONK	31:16	—	—	—	—	—	—	—	—	—	—	—	—	—	—	—	—	0000
		15:0	ON	—	—	—	EDGEDETECT	—	—	—	—	—	—	—	—	—	—	—	0000
0380	CNENK	31:16	—	—	—	—	—	—	—	—	—	—	—	—	—	—	—	—	0000
		15:0	—	CNIEK14	CNIEK13	CNIEK12	CNIEK11	CNIEK10	CNIEK9	CNIEK8	CNIEK7	CNIEK6	CNIEK5	CNIEK4	CNIEK3	CNIEK2	CNIEK1	CNIEK0	0000
0390	CNSTATK	31:16	—	—	—	—	—	—	—	—	—	—	—	—	—	—	—	—	0000
		15:0	—	CNSTATK14	CNSTATK13	CNSTATK12	CNSTATK11	CNSTATK10	CNSTATK9	CNSTATK8	CNSTATK7	CNSTATK6	CNSTATK5	CNSTATK4	CNSTATK3	CNSTATK2	CNSTATK1	CNSTATK0	0000
03A0	CNNEK	31:16	—	—	—	—	—	—	—	—	—	—	—	—	—	—	—	—	0000
		15:0	—	CNNEK14	CNNEK13	CNNEK12	CNNEK11	CNNEK10	CNNEK9	CNNEK8	CNNEK7	CNNEK6	CNNEK5	CNNEK4	CNNEK3	CNNEK2	CNNEK1	CNNEK0	0000
03B0	CNFK	31:16	—	—	—	—	—	—	—	—	—	—	—	—	—	—	—	—	0000
		15:0	—	CNFK14	CNFK13	CNFK12	CNFK11	CNFK10	CNFK9	CNFK8	CNFK7	CNFK6	CNFK5	CNFK4	CNFK3	CNFK2	CNFK1	CNFK0	0000
03C0	SRCON0K	31:16	—	—	—	—	—	—	—	—	—	—	—	—	—	—	—	—	0000
		15:0	—	SR0K14	SR0K13	—	—	—	—	—	—	—	—	—	—	—	—	—	0000
03D0	SRCON1K	31:16	—	—	—	—	—	—	—	—	—	—	—	—	—	—	—	—	0000
		15:0	—	SR1K14	SR1K13	—	—	—	—	—	—	—	—	—	—	—	—	—	0000

Legend: x = Unknown value on Reset; — = Unimplemented, read as '0'; Reset values are shown in hexadecimal.

Note 1: All registers in this table have corresponding CLR, SET and INV registers at its virtual address, plus an offset of 0x4, 0x8 and 0xC, respectively. See **Section 13.3 "CLR, SET, and INV Registers"** for more information.

© 2020 Microchip Technology Inc.

REGISTER 13-1: [*pin name*]R: PERIPHERAL PIN SELECT INPUT REGISTER

Bit Range	Bit 31/23/15/7	Bit 30/22/14/6	Bit 29/21/13/5	Bit 28/20/12/4	Bit 27/19/11/3	Bit 26/18/10/2	Bit 25/17/9/1	Bit 24/16/8/0
31:24	U-0	U-0	U-0	U-0	U-0	U-0	U-0	U-0
	—	—	—	—	—	—	—	—
23:16	U-0	U-0	U-0	U-0	U-0	U-0	U-0	U-0
	—	—	—	—	—	—	—	—
15:8	U-0	U-0	U-0	U-0	U-0	U-0	U-0	U-0
	—	—	—	—	—	—	—	—
7:0	U-0	U-0	U-0	U-0	R/W-0	R/W-0	R/W-0	R/W-0
	—	—	—	[*pin name*]R<4:0>				

Legend:			
R = Readable bit	W = Writable bit	U = Unimplemented bit, read as '0'	
-n = Value at POR	'1' = Bit is set	'0' = Bit is cleared	x = Bit is unknown

bit 31-4 **Unimplemented:** Read as '0'

bit 3-0 **[*pin name*]R<4:0>:** Peripheral Pin Select Input bits
Where [*pin name*] refers to the pins that are used to configure peripheral input mapping. See Table 13-2 for input pin selection values.

Note: Register values can only be changed if the IOLOCK Configuration bit (CFGCON<13>) = 0.

REGISTER 13-2: RPnR: PERIPHERAL PIN SELECT OUTPUT REGISTER

Bit Range	Bit 31/23/15/7	Bit 30/22/14/6	Bit 29/21/13/5	Bit 28/20/12/4	Bit 27/19/11/3	Bit 26/18/10/2	Bit 25/17/9/1	Bit 24/16/8/0
31:24	U-0	U-0	U-0	U-0	U-0	U-0	U-0	U-0
	—	—	—	—	—	—	—	—
23:16	U-0	U-0	U-0	U-0	U-0	U-0	U-0	U-0
	—	—	—	—	—	—	—	—
15:8	U-0	U-0	U-0	U-0	U-0	U-0	U-0	U-0
	—	—	—	—	—	—	—	—
7:0	U-0	U-0	U-0	U-0	R/W-0	R/W-0	R/W-0	R/W-0
	—	—	—	RPnR<4:0>				

Legend:			
R = Readable bit	W = Writable bit	U = Unimplemented bit, read as '0'	
-n = Value at POR	'1' = Bit is set	'0' = Bit is cleared	x = Bit is unknown

bit 31-4 **Unimplemented:** Read as '0'

bit 3-0 **RPnR<4:0>:** Peripheral Pin Select Output bits
See Table 13-3 for output pin selection values.

Note: Register values can only be changed if the IOLOCK Configuration bit (CFGCON<13>) = 0.

 © 2020 Microchip Technology Inc.

REGISTER 13-3: CNCONx: CHANGE NOTICE CONTROL FOR PORTx REGISTER (x = A/B/C/K)

Bit Range	Bit 31/23/15/7	Bit 30/22/14/6	Bit 29/21/13/5	Bit 28/20/12/4	Bit 27/19/11/3	Bit 26/18/10/2	Bit 25/17/9/1	Bit 24/16/8/0
31:24	U-0	U-0	U-0	U-0	U-0	U-0	U-0	U-0
	—	—	—	—	—	—	—	—
23:16	U-0	U-0	U-0	U-0	U-0	U-0	U-0	U-0
	—	—	—	—	—	—	—	—
15:8	R/W-0	U-0	U-0	U-0	R/W-0	U-0	U-0	U-0
	ON	—	—	—	EDGEDETECT	—	—	—
7:0	U-0	U-0	U-0	U-0	U-0	U-0	U-0	U-0
	—	—	—	—	—	—	—	—

Legend:			
R = Readable bit	W = Writable bit	U = Unimplemented bit, read as '0'	
-n = Value at POR	'1' = Bit is set	'0' = Bit is cleared	x = Bit is unknown

bit 31-16 **Unimplemented:** Read as '0'

bit 15 **ON:** CN Control ON bit
- 1 = CN is enabled
- 0 = CN is disabled

bit 14-12 **Unimplemented:** Read as '0'

bit 11 **EDGEDETECT:** Change Notification Style bit
- 1 = Edge style. Detect edge transitions (CNFx used for CN event).
- 0 = Mismatch style. Detect change from last PORTx read (CNSTATx used for CN event).

bit 10-0 **Unimplemented:** Read as '0'

 © 2020 Microchip Technology Inc.

14.0 PERIPHERAL TRIGGER GENERATOR (PTG)

The PTG provides a means to schedule complex high-speed peripheral operations that would be difficult to achieve using software. The PIC32MZ W1 device has single PTG module. The PTG module uses thirty-two 8-bit commands, called as step, that the user writes to the PTG Queue registers (PTGQUE0-PTGQUE7). Each 8-bit step is made up of a four bit command code and a four bit parameter field. The commands perform operations such as wait for an input trigger signal, generate an output trigger signal, and wait for the timer.

PTG does not synchronize its clock sources. Use the same clock source for coordinated operation of PTG with another module (for example, ADC).

PTG module has the following key features:

- Multiple clock sources
- Four 16-bit general purpose timers
- Two 16-bit general limit counters
- Configurable for rising or falling edge triggering
- PTG generated processor interrupts include:
  - Four configurable processor interrupts
  - Interrupt on a step event in Single Step Ping mode
  - Interrupt on a PTG WDT time-out
- Receives trigger signals from following peripherals:
  - ADC
  - ICAP
  - OCMP
- Generates trigger or synchronize to following peripherals:
  - ADC
  - ICAP
  - OCMP

FIGURE 14-1: PTG BLOCK DIAGRAM

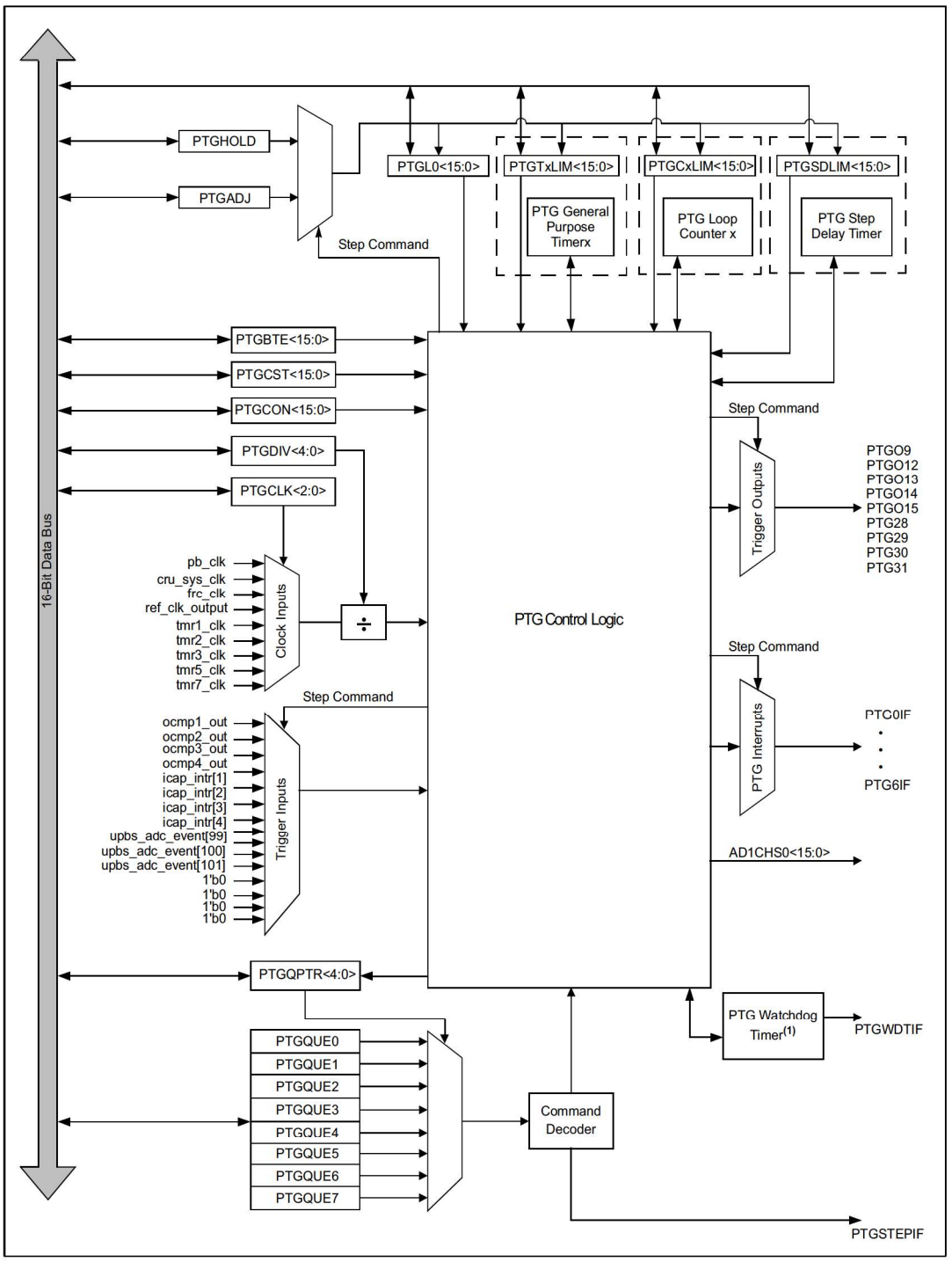

Note 1: This is a dedicated WDT for the PTG module and is independent of the device WDT.

 © 2020 Microchip Technology Inc.

14.1 PTG Control Registers

TABLE 14-1: PTG CONTROL REGISTER MAP

Virtual Address (BF80_#)	Register Name	Bit Range	Bits																All Resets
			31/15	30/14	29/13	28/12	27/11	26/10	25/9	24/8	23/7	22/6	21/5	20/4	19/3	18/2	17/1	16/0	
1C00	PTGCON	31:16	PTGCLK<2:0>			PTGDIV<4:0>					PTGPWD<3:0>				—	PTGWDT<2:0>			0000
		15:0	PTGON	—	PTGSIDL	PTGTOGL	—	PTGSWT	PTGSSEN	PTGIVIS	PTGSTRT	PTGWDTO	PTGBUSY	—	—	—	PTGITM<1:0>		0000
1C10	PTGBTE	31:16	PTGBTE<31:16>																0000
		15:0	PTGBTE<15:0>																0000
1C20	PTGHOLD	31:16	—	—	—	—	—	—	—	—	—	—	—	—	—	—	—	—	0000
		15:0	PTGHOLD<15:0>																0000
1C30	PTGT0LIM	31:16	—	—	—	—	—	—	—	—	—	—	—	—	—	—	—	—	0000
		15:0	PTGT0LIM<15:0>																0000
1C40	PTGT1LIM	31:16	—	—	—	—	—	—	—	—	—	—	—	—	—	—	—	—	0000
		15:0	PTGT1LIM<15:0>																0000
1C50	PTGSDLIM	31:16	—	—	—	—	—	—	—	—	—	—	—	—	—	—	—	—	0000
		15:0	PTGSDLIM<15:0>																0000
1C60	PTGC0LIM	31:16	—	—	—	—	—	—	—	—	—	—	—	—	—	—	—	—	0000
		15:0	PTGC0LIM<15:0>																0000
1C70	PTGC1LIM	31:16	—	—	—	—	—	—	—	—	—	—	—	—	—	—	—	—	0000
		15:0	PTGC1LIM<15:0>																0000
1C80	PTGADJ	31:16	—	—	—	—	—	—	—	—	—	—	—	—	—	—	—	—	0000
		15:0	PTGADJ<15:0>																0000
1C90	PTGL0	31:16	—	—	—	—	—	—	—	—	—	—	—	—	—	—	—	—	0000
		15:0	PTGL0<15:0>																0000
1CA0	PTGQPTR	31:16	—	—	—	—	—	—	—	—	—	—	—	—	—	—	—	—	0000
		15:0	—	—	—	—	—	—	—	—	—	—	—	PTGQPTR<5:0>					0000
1CC0	PTGQUE0	31:16	STEP3<7:0>								STEP2<7:0>								0000
		15:0	STEP1<7:0>								STEP0<7:0>								0000
1CD0	PTGQUE1	31:16	STEP7<7:0>								STEP6<7:0>								0000
		15:0	STEP5<7:0>								STEP4<7:0>								0000
1CE0	PTGQUE2	31:16	STEP11<7:0>								STEP10<7:0>								0000
		15:0	STEP9<7:0>								STEP8<7:0>								0000
1CF0	PTGQUE3	31:16	STEP15<7:0>								STEP14<7:0>								0000
		15:0	STEP13<7:0>								STEP12<7:0>								0000
1D00	PTGQUE4	31:16	STEP19<7:0>								STEP18<7:0>								0000
		15:0	STEP17<7:0>								STEP16<7:0>								0000

Legend: x = unknown value on Reset; — = unimplemented, read as '0'. Reset values are shown in hexadecimal.

Note 1: All registers have corresponding CLR, SET and INV registers at its virtual address, plus an offset of 0x4, 0x8, and 0xC, respectively. See **Section 13.3 "CLR, SET, and INV Registers"** for more information.

© 2020 Microchip Technology Inc.

TABLE 14-1: PTG CONTROL REGISTER MAP (CONTINUED)

Virtual Address (BF80_#)	Register Name	Bit Range	Bits															All Resets
			31/15	30/14	29/13	28/12	27/11	26/10	25/9	24/8	23/7	22/6	21/5	20/4	19/3	18/2	17/1	16/0	
1D10	PTGQUE5	31:16	STEP23<7:0>								STEP22<7:0>								0000
		15:0	STEP21<7:0>								STEP20<7:0>								0000
1D20	PTGQUE6	31:16	STEP27<7:0>								STEP26<7:0>								0000
		15:0	STEP25<7:0>								STEP24<7:0>								0000
1D30	PTGQUE7	31:16	STEP31<7:0>								STEP30<7:0>								0000
		15:0	STEP29<7:0>								STEP28<7:0>								0000

Legend: x = unknown value on Reset; — = unimplemented, read as '0'. Reset values are shown in hexadecimal.

Note 1: All registers have corresponding CLR, SET and INV registers at its virtual address, plus an offset of 0x4, 0x8, and 0xC, respectively. See **Section 13.3 "CLR, SET, and INV Registers"** for more information.

© 2020 Microchip Technology Inc.

REGISTER 14-1: PTGCON: PTG CONTROL REGISTER

Bit Range	Bit 31/23/15/7	Bit 30/22/14/6	Bit 29/21/13/5	Bit 28/20/12/4	Bit 27/19/11/3	Bit 26/18/10/2	Bit 25/17/9/1	Bit 24/16/8/0
31:24	R/W-0	R/W-0	R/W-0	R/W-0	R/W-0	R/W-0	R/W-0	R/W-0
	PTGCLK<2:0>(1)			PTGDIV<4:0>(1)				
23:16	R/W-0	R/W-0	R/W-0	R/W-0	U-0	R/W-0	R/W-0	R/W-0
	PTGPWD<3:0>(1)				—	PTGWDT<2:0>(1)		
15:8	R/W-0	R/W-0	R/W-0	R/W-0	U-0	R/W-0, HC	R/W-0	R/W-0
	PTGON	—	PTGSIDL	PTGTOGL(1)	RSVD	PTGSWT	PTGSSEN(3)	PTGIVIS(1)
7:0	R/W-0, HC		R-0, HS/HC	U-0	U-0	U-0	R-0	R-0
	PTGSTRT	PTGWDTO(1)	PTGBUSY	—	—	—	PTGITM<1:0>(1)	

Legend:	HC = Hardware Cleared		HS = Hardware Set
R = Readable bit	W = Writable bit	U = Unimplemented bit, read as '0'	
-n = Value at POR	'1' = Bit is set	'0' = Bit is cleared	x = Bit is unknown

bit 31-19 **PTGCLK<2:0>:** PTG Module Clock Source Select bits(1)
- 111 = PTG module clock source will be REF_CLK
- 110 = PTG module clock source will be TMR7_CLK
- 101 = PTG module clock source will be TMR5_CLK
- 100 = PTG module clock source will be TMR3_CLK
- 011 = PTG module clock source will be TMR1_CLK
- 010 = PTG module clock source will be FRC_CLK
- 001 = PTG module clock source will be SYS_CLK
- 000 = PTG module clock source will be PB1_CLK

bit 28-24 **PTGDIV<4:0>:** PTG Module Clock Prescaler (Divider) bits(1)
- 11111 = Divide by 32
- 11110 = Divide by 31
- •
- •
- •
- 00001 = Divide by 2
- 00000 = Divide by 1

bit 23-20 **PTGPWD<3:0>:** PTG Trigger Output Pulse Width bits(1)
- 1111 = All trigger outputs are 16 PTG clock cycles wide
- 1110 = All trigger outputs are 15 PTG clock cycles wide
- •
- •
- •
- 0001 = All trigger outputs are 2 PTG clock cycles wide
- 0000 = All trigger outputs are 1 PTG clock cycle wide

bit 19 **Unimplemented:** Read as '0'

Note 1: These bits are read only when the module is executing step command (PTGSTRT = 1).

2: The PTGSSEN bit may only be written when in Debug mode, and will otherwise always read '0'. The PTGSSEN bit (internal) value is preserved independent of Debug mode.

REGISTER 14-1: PTGCON: PTG CONTROL REGISTER (CONTINUED)

bit 18-16 **PTGWDT<2:0>:** PTG Watchdog Time-Out Count Value Select bits(1)
- 111 = Watchdog will timeout after 512 PTG clocks
- 110 = Watchdog will timeout after 256 PTG clocks
- 101 = Watchdog will timeout after 128 PTG clocks
- 100 = Watchdog will timeout after 64 PTG clocks
- 011 = Watchdog will timeout after 32 PTG clocks
- 010 = Watchdog will timeout after 16 PTG clocks
- 001 = Watchdog will timeout after 8 PTG clocks
- 000 = Watchdog disabled

bit 15 **PTGON:** Module Enable bit
- 1 = PTG module is enabled
- 0 = PTG module is disabled

bit 14 **Unimplemented:** Read as '0'

bit 13 **PTGSIDL:** Stop in Idle Mode bit
- 1 = Discontinue module operation when device enters Idle mode (act as if in Sleep mode)
- 0 = Continue module operation when device enters Idle mode

bit 12 **PTGTOGL:** TRIG Output Toggle Mode bit(1)
- 1 = Toggle state of the PTGOx for each execution of the PTGTRIG command
- 0 = Each execution of the PTGTRIG command will generate a single PTGOx pulse determined by the value in the PTGPWDx bits

bit 11 **Unimplemented:** Read as '0'

bit 10 **PTGSWT:** Software Trigger bit

This control bit enables the application software to interact with the PTG module via the “Wait for software trigger” step commands (PTGCTRL SWTRGE or PTGCTRL SWTRGL). The PTGCTRL SWTRGE command is only sensitive to a 0 to 1 transition of the PTGSWT bit that occurs during execution of the command. The PTGCTRL SWTRGL command is sensitive to a logic 1 state of the PTGSWT bit that is present prior to and during, or occurs during, execution of the command.

1 = If the PTG state machine is executing the PTGCTRL SWTRGE command and PTGSWT = 0 prior to the bit set operation, the command will complete and execution will continue. If PTGSWT = 1 prior to the bit set operation, no action.
If the PTG state machine is executing the PTGCTRL SWTRGL command, the command will complete and execution will continue irrespective of when the bit set operation occurred.
0 = No action other than to clear the bit(2).

Note 1: Software may write ‘1’ to the PTGSWT bit to initiate the software trigger. Writing ‘0’ (at any time) will have no effect.

2: PTGSWT is automatically cleared by hardware when the PTGCTRL SWTRGE command completes after the associated step delay, if any (when the subsequent command starts). PTGSWT is not automatically cleared by hardware when the PTGCTRL SWTRGL command completes.

3: PTGSWT is cleared when PTGON = 0.

bit 9 **PTGSSEN:** Enable Single Step bit(2)

If in Debug mode:
1 = Enable command Single Step mode
0 = Disable command Single Step mode
Otherwise, the PTGSSEN bit will have no effect.

Note: The PTGSSEN bit may only be written when in Debug mode, and will otherwise always read ‘0’.

Note 1: These bits are read only when the module is executing step command (PTGSTRT = 1).

2: The PTGSSEN bit may only be written when in Debug mode, and will otherwise always read ‘0’. The PTGSSEN bit (internal) value is preserved independent of Debug mode.

 © 2020 Microchip Technology Inc.

REGISTER 14-1: PTGCON: PTG CONTROL REGISTER (CONTINUED)

bit 8 **PTGIVIS:** Counter/Timer Internal Visibility Control bit(1)

1 = SFR read of the PTGSDLIM, PTGCnLIM or PTGTnLIM registers will yield the contents of the corresponding internal timer/counter (PTGSD, PTGCn or PTGTn, respectively)

0 = SFR read of the PTGSDLIM, PTGCnLIM or PTGTnLIM registers will yield the contents of the associated SFR register, and represents the value previously written to the target register.

The register read will be either the UPB or internal register as determined by the PTGSTART bit.

Note 1: The PTGIVIS bit enables the user to "debug" the setup and operation of the PTG module in an application.

bit 7 **PTGSTRT:** Start PTG Sequencer bit

If not in Single Step mode:
1 = Start PTG sequencer and sequentially execute commands (Continuous mode)
0 = Stop PTG sequencer and place in Halt state
If in Single Step mode:
1 = Start PTG sequencer and execute one step command, and then halt

Note: Single step enable must be set (PTGSSEN = 1) prior to the bit set operation of PTGSTRT.

0 = Stop PTG sequencer and place in HALT state

Note 1: In Single Step mode (PTGSSEN = 1), PTGSTRT is automatically cleared by hardware when the target command completes after the associated step delay, if any (when the subsequent command starts).

2: PTGSTRT is cleared when PTGON = 0.

3: This bit can be hardware clearable by the PTG WDT.

bit 6 **PTGWDTO:** PTG State Machine Watchdog Timeout Status bit(1)

1 = PTG state machine watchdog has timed out

0 = PTG state machine watchdog has not timed out

Note: PTGWDTO is automatically set by hardware but must be cleared by the user or by disabling the module (PTGON = 0).

bit 5 **PTGBUSY:** PTG State Machine Busy bit

1 = PTG state machine is running on the selected PTG clock source instructions - No SFR writes are allowed to PTGCLK and PTBDIV bit fields.

0 = PTG state machine is NOT running.

Note: PTGBUSY is asserted when PTGON = 1 to indicate PTG is busy running, it will be cleared by HW once sequencer has completed all the tasks when PTGON is cleared.

bit 4-2 **Unimplemented:** Read as '0'

bit 1-0 **PTGITM<1:0>:** Selects PTG Input Trigger Command Operating Mode bits(1)

11 = Test input state once per step delay, exit when (level) true and complete command without step delay.

10 = Test input state once per step delay, exit when (level) true to step delay prior to command completion.

01 = Test input state continuously, exit when valid edge detected (during execution) and complete command without step delay.

00 = Test input state continuously, exit to step delay when valid edge detected (during execution), prior to command completion.

Note 1: These bits are read only when the module is executing step command (PTGSTRT = 1).

2: The PTGSSEN bit may only be written when in Debug mode, and will otherwise always read '0'. The PTGSSEN bit (internal) value is preserved independent of Debug mode.

REGISTER 14-2: PTGBTE: PTG BROADCAST TRIGGER ENABLE REGISTER

Bit Range	Bit 31/23/15/7	Bit 30/22/14/6	Bit 29/21/13/5	Bit 28/20/12/4	Bit 27/19/11/3	Bit 26/18/10/2	Bit 25/17/9/1	Bit 24/16/8/0
31:24	R/W-0	R/W-0	R/W-0	R/W-0	R/W-0	R/W-0	R/W-0	R/W-0
	PTGBTE<31:24>(1)							
23:16	R/W-0	R/W-0	R/W-0	R/W-0	R/W-0	R/W-0	R/W-0	R/W-0
	PTGBTE<23:16>(1)							
15:8	R/W-0	R/W-0	R/W-0	R/W-0	R/W-0	R/W-0	R/W-0	R/W-0
	PTGBTE<15:8>(1)							
7:0	R/W-0	R/W-0	R/W-0	R/W-0	R/W-0	R/W-0	R/W-0	R/W-0
	PTGBTE<7:0>(1)							

Legend:			
R = Readable bit	W = Writable bit	U = Unimplemented bit, read as '0'	
-n = Value at POR	'1' = Bit is set	'0' = Bit is cleared	x = Bit is unknown

bit 31-0 **PTGBTE<31:0>:** Broadcast Trigger Enable Register bits(1)
Each bit corresponds to a individual trigger output. If a bit is set in the PTGBTE register, the corresponding individual trigger output will be generated if a step broadcast command is executed.

Note 1: These bits are read only when the module is executing step commands (PTGSTRT = 1).

 © 2020 Microchip Technology Inc.

REGISTER 14-3: PTGHOLD: PTG HOLD REGISTER

Bit Range	Bit 31/23/15/7	Bit 30/22/14/6	Bit 29/21/13/5	Bit 28/20/12/4	Bit 27/19/11/3	Bit 26/18/10/2	Bit 25/17/9/1	Bit 24/16/8/0
31:24	U-0	U-0	U-0	U-0	U-0	U-0	U-0	U-0
	—	—	—	—	—	—	—	—
23:16	U-0	U-0	U-0	U-0	U-0	U-0	U-0	U-0
	—	—	—	—	—	—	—	—
15:8	R/W-0	R/W-0	R/W-0	R/W-0	R/W-0	R/W-0	R/W-0	R/W-0
	PTGHOLD<15:8>(1)							
7:0	R/W-0	R/W-0	R/W-0	R/W-0	R/W-0	R/W-0	R/W-0	R/W-0
	PTGHOLD<7:0>(1)							

Legend:			
R = Readable bit	W = Writable bit	U = Unimplemented bit, read as '0'	
-n = Value at POR	'1' = Bit is set	'0' = Bit is cleared	x = Bit is unknown

bit 31-16 **Unimplemented:** Read as '0'

bit 15-0 **PTGHOLD<15:0>:** General Purpose Hold Register bits(1)

Preserves a copy of user supplied data for re-initializing one of the following registers, PTGT0LIM, PTGT1LIM, PTGC0LIM, PTGC1LIM, PTGSDLIM, and PTGL0 via a step command.

Note 1: These bits are read only when the module is executing step commands (PTGSTRT = 1).

REGISTER 14-4: PTGT0LIM: PTG TIMER0 LIMIT REGISTER

Bit Range	Bit 31/23/15/7	Bit 30/22/14/6	Bit 29/21/13/5	Bit 28/20/12/4	Bit 27/19/11/3	Bit 26/18/10/2	Bit 25/17/9/1	Bit 24/16/8/0
31:24	U-0	U-0	U-0	U-0	U-0	U-0	U-0	U-0
	—	—	—	—	—	—	—	—
23:16	U-0	U-0	U-0	U-0	U-0	U-0	U-0	U-0
	—	—	—	—	—	—	—	—
15:8	R/W-1	R/W-1	R/W-1	R/W-1	R/W-1	R/W-1	R/W-1	R/W-1
	PTGT0LIM<15:8>(1)							
7:0	R/W-1	R/W-1	R/W-1	R/W-1	R/W-1	R/W-1	R/W-1	R/W-1
	PTGT0LIM<7:0>(1)							

Legend:			
R = Readable bit	W = Writable bit	U = Unimplemented bit, read as '0'	
-n = Value at POR	'1' = Bit is set	'0' = Bit is cleared	x = Bit is unknown

bit 31-16 **Unimplemented:** Read as '0'

bit 15-0 **PTGT0LIM<15:0>:** PTG (GP) Timer0 Limit Register bits(1)
General Purpose Timer0 Limit register (effective only with a "Wait for GP Timer0" step command).

Note 1: These bits are read only when the module is executing step commands (PTGSTRT = 1).

 © 2020 Microchip Technology Inc.

REGISTER 14-5: PTGT1LIM: PTG TIMER1 LIMIT REGISTER

Bit Range	Bit 31/23/15/7	Bit 30/22/14/6	Bit 29/21/13/5	Bit 28/20/12/4	Bit 27/19/11/3	Bit 26/18/10/2	Bit 25/17/9/1	Bit 24/16/8/0
31:24	U-0	U-0	U-0	U-0	U-0	U-0	U-0	U-0
	—	—	—	—	—	—	—	—
23:16	U-0	U-0	U-0	U-0	U-0	U-0	U-0	U-0
	—	—	—	—	—	—	—	—
15:8	R/W-0	R/W-0	R/W-0	R/W-0	R/W-0	R/W-0	R/W-0	R/W-0
	PTGT1LIM<15:8>(1)							
7:0	R/W-0	R/W-0	R/W-0	R/W-0	R/W-0	R/W-0	R/W-0	R/W-0
	PTGT1LIM<7:0>(1)							

Legend:			
R = Readable bit	W = Writable bit	U = Unimplemented bit, read as '0'	
-n = Value at POR	'1' = Bit is set	'0' = Bit is cleared	x = Bit is unknown

bit 31-16 **Unimplemented:** Read as '0'

bit 31-0 **PTGT1LIM<15:0>:** PTG (GP) Timer1Limit Register bits(1)
General Purpose Timer1 Limit register (effective only with a "Wait for GP Timer1" step command).

Note 1: These bits are read only when the module is executing step commands (PTGSTRT = 1).

REGISTER 14-6: PTGSDLIM: PTG STEP DELAY LIMIT REGISTER

Bit Range	Bit 31/23/15/7	Bit 30/22/14/6	Bit 29/21/13/5	Bit 28/20/12/4	Bit 27/19/11/3	Bit 26/18/10/2	Bit 25/17/9/1	Bit 24/16/8/0
31:24	U-0	U-0	U-0	U-0	U-0	U-0	U-0	U-0
	—	—	—	—	—	—	—	—
23:16	U-0	U-0	U-0	U-0	U-0	U-0	U-0	U-0
	—	—	—	—	—	—	—	—
15:8	R/W-0	R/W-0	R/W-0	R/W-0	R/W-0	R/W-0	R/W-0	R/W-0
	PTGSDLIM<15:8>(1)							
7:0	R/W-0	R/W-0	R/W-0	R/W-0	R/W-0	R/W-0	R/W-0	R/W-0
	PTGSDLIM<7:0>(1)							

Legend:			
R = Readable bit	W = Writable bit	U = Unimplemented bit, read as '0'	
-n = Value at POR	'1' = Bit is set	'0' = Bit is cleared	x = Bit is unknown

bit 31-6 **Unimplemented:** Read as '0'

bit 15-0 **PTGSDLIM<15:0>:** PTG Step Delay Limit Register bits(1)

Holds a PTG step delay value representing the number of additional PTG clocks between the start of a step command, and the completion of the step command.

A base delay of a command is one PTG clock period, and the PTG step delay value is added to this minimum command delay to create the total step command duration. That is, if PTGSDLIM = 0x0006, the resultant step command duration will be 7 PTG clocks.

Note 1: These bits are read only when the module is executing step commands (PTGSTRT = 1).

 © 2020 Microchip Technology Inc.

REGISTER 14-7: PTGC0LIM: PTG COUNTER '0' LIMIT REGISTER

Bit Range	Bit 31/23/15/7	Bit 30/22/14/6	Bit 29/21/13/5	Bit 28/20/12/4	Bit 27/19/11/3	Bit 26/18/10/2	Bit 25/17/9/1	Bit 24/16/8/0
31:24	U-0	U-0	U-0	U-0	U-0	U-0	U-0	U-0
	—	—	—	—	—	—	—	—
23:16	U-0	U-0	U-0	U-0	U-0	U-0	U-0	U-0
	—	—	—	—	—	—	—	—
15:8	R/W-0	R/W-0	R/W-0	R/W-0	R/W-0	R/W-0	R/W-0	R/W-0
	PTGC0LIM<15:8>(1)							
7:0	R/W-0	R/W-0	R/W-0	R/W-0	R/W-0	R/W-0	R/W-0	R/W-0
	PTGC0LIM<7:0>(1)							

Legend:			
R = Readable bit	W = Writable bit	U = Unimplemented bit, read as '0'	
-n = Value at POR	'1' = Bit is set	'0' = Bit is cleared	x = Bit is unknown

bit 31-16 **Unimplemented:** Read as '0'

bit 15-0 **PTGC0LIM<15:0>:** PTG Counter '0' Limit Register bits(1)

These bits can be used to specify the loop count for the PTGJMPC0 step command, or as a general purpose counter limit register.

Note 1: These bits are read only when the module is executing step commands (PTGSTRT = 1).

REGISTER 14-8: PTGC1LIM: PTG COUNTER '1' LIMIT REGISTER

Bit Range	Bit 31/23/15/7	Bit 30/22/14/6	Bit 29/21/13/5	Bit 28/20/12/4	Bit 27/19/11/3	Bit 26/18/10/2	Bit 25/17/9/1	Bit 24/16/8/0
31:24	U-0	U-0	U-0	U-0	U-0	U-0	U-0	U-0
	—	—	—	—	—	—	—	—
23:16	U-0	U-0	U-0	U-0	U-0	U-0	U-0	U-0
	—	—	—	—	—	—	—	—
15:8	R/W-0	R/W-0	R/W-0	R/W-0	R/W-0	R/W-0	R/W-0	R/W-0
	PTGC1LIM<15:8>(1)							
7:0	R/W-0	R/W-0	R/W-0	R/W-0	R/W-0	R/W-0	R/W-0	R/W-0
	PTGC1LIM<7:0>(1)							

Legend:			
R = Readable bit	W = Writable bit	U = Unimplemented bit, read as '0'	
-n = Value at POR	'1' = Bit is set	'0' = Bit is cleared	x = Bit is unknown

bit 31-16 **Unimplemented:** Read as '0'

bit 31-0 **PTGC1LIM<31:0>:** PTG Counter '1' Limit Register bits(1)

These bits can be used to specify the loop count for the PTGJMPC1 step command, or as a general purpose counter limit register.

Note 1: These bits are read only when the module is executing step commands (PTGSTRT = 1).

 © 2020 Microchip Technology Inc.

REGISTER 14-9: PTGADJ: PTG ADJUST REGISTER

Bit Range	Bit 31/23/15/7	Bit 30/22/14/6	Bit 29/21/13/5	Bit 28/20/12/4	Bit 27/19/11/3	Bit 26/18/10/2	Bit 25/17/9/1	Bit 24/16/8/0
31:24	U-0	U-0	U-0	U-0	U-0	U-0	U-0	U-0
	—	—	—	—	—	—	—	—
23:16	U-0	U-0	U-0	U-0	U-0	U-0	U-0	U-0
	—	—	—	—	—	—	—	—
15:8	R/W-0	R/W-0	R/W-0	R/W-0	R/W-0	R/W-0	R/W-0	R/W-0
	PTGADJ<15:8>(1)							
7:0	R/W-0	R/W-0	R/W-0	R/W-0	R/W-0	R/W-0	R/W-0	R/W-0
	PTGADJ<7:0>(1)							

Legend:			
R = Readable bit	W = Writable bit	U = Unimplemented bit, read as '0'	
-n = Value at POR	'1' = Bit is set	'0' = Bit is cleared	x = Bit is unknown

bit 31-16 **Unimplemented:** Read as '0'

bit 15-0 **PTGADJ<15:0>:** PTG Adjust Register bits(1)

A register that is used by the PTGADD step command to adjust the contents of one of the following registers, PTGT0LIM, PTGT1LIM, PTGC0LIM, PTGC1LIM, PTGSDLIM, and PTGL0. The PTGADD step command adds the contents of the PTGADJ<15:0> register to the target register, and then writes it back to the target register.

Note 1: These bits are read only when the module is executing step commands (PTGSTRT = 1).

REGISTER 14-10: PTGL0: PTG LITERAL REGISTER

Bit Range	Bit 31/23/15/7	Bit 30/22/14/6	Bit 29/21/13/5	Bit 28/20/12/4	Bit 27/19/11/3	Bit 26/18/10/2	Bit 25/17/9/1	Bit 24/16/8/0
31:24	U-0	U-0	U-0	U-0	U-0	U-0	U-0	U-0
	—	—	—	—	—	—	—	—
23:16	U-0	U-0	U-0	U-0	U-0	U-0	U-0	U-0
	—	—	—	—	—	—	—	—
15:8	R/W-0	R/W-0	R/W-0	R/W-0	R/W-0	R/W-0	R/W-0	R/W-0
	PTGL0<15:8>(1)							
7:0	R/W-0	R/W-0	R/W-0	R/W-0	R/W-0	R/W-0	R/W-0	R/W-0
	PTGL0<7:0>(1)							

Legend:			
R = Readable bit	W = Writable bit	U = Unimplemented bit, read as '0'	
-n = Value at POR	'1' = Bit is set	'0' = Bit is cleared	x = Bit is unknown

bit 31-16 **Unimplemented:** Read as '0'

bit 15-0 **PTGL0<15:0>:** PTG Literal Register bits(1)

This register holds the 16-bit literal value that is strobed when the PTGCTRL STRBL0 command is executed.

Note 1: These bits are read only when the module is executing step commands (PTGSTRT = 1).

 © 2020 Microchip Technology Inc.

REGISTER 14-11: PTGQPTR: PTG STEP QUEUE POINTER REGISTER

Bit Range	Bit 31/23/15/7	Bit 30/22/14/6	Bit 29/21/13/5	Bit 28/20/12/4	Bit 27/19/11/3	Bit 26/18/10/2	Bit 25/17/9/1	Bit 24/16/8/0
31:24	U-0	U-0	U-0	U-0	U-0	U-0	U-0	U-0
	—	—	—	—	—	—	—	—
23:16	U-0	U-0	U-0	U-0	U-0	U-0	U-0	U-0
	—	—	—	—	—	—	—	—
15:8	U-0	U-0	U-0	U-0	U-0	U-0	U-0	U-0
	—	—	—	—	—	—	—	—
7:0	U-0	U-0	U-0	R/W-0	R/W-0	R/W-0	R/W-0	R/W-0
	—	—	—	PTGQPTR<4:0>(1)				

Legend:			
R = Readable bit	W = Writable bit	U = Unimplemented bit, read as '0'	
-n = Value at POR	'1' = Bit is set	'0' = Bit is cleared	x = Bit is unknown

bit 31-5 **Unimplemented:** Read as '0'

bit 4-0 **PTGQPTR<4:0>:** PTG Step Queue Pointer Register bits(1)
This register points to the currently active step command in the step queue.

Note 1: These bits are read only when the module is executing step commands (PTGSTRT = 1).

REGISTER 14-12: PTGQUEn: PTG STEP QUEUE 'n' REGISTER ('n' = 0-7)

Bit Range	Bit 31/23/15/7	Bit 30/22/14/6	Bit 29/21/13/5	Bit 28/20/12/4	Bit 27/19/11/3	Bit 26/18/10/2	Bit 25/17/9/1	Bit 24/16/8/0
31:24	R/W-0	R/W-0	R/W-0	R/W-0	R/W-0	R/W-0	R/W-0	R/W-0
	STEP3<15:8>(1)							
23:16	R/W-0	R/W-0	R/W-0	R/W-0	R/W-0	R/W-0	R/W-0	R/W-0
	STEP2<7:0>(1)							
15:8	R/W-0	R/W-0	R/W-0	R/W-0	R/W-0	R/W-0	R/W-0	R/W-0
	STEP1<15:8>(1)							
7:0	R/W-0	R/W-0	R/W-0	R/W-0	R/W-0	R/W-0	R/W-0	R/W-0
	STEP0<7:0>(1)							

Legend:			
R = Readable bit	W = Writable bit	U = Unimplemented bit, read as '0'	
-n = Value at POR	'1' = Bit is set	'0' = Bit is cleared	x = Bit is unknown

bit 31-24 **STEP[4n+3]<7:0>:** STEP[4n+3] Command Byte bits(1)
A queue location for storage of the STEP[4n+3] command byte.

bit 23-16 **STEP[4n+2]<7:0>:** STEP[4n+2] Command Byte bits(1)
A queue location for storage of the STEP[4n+2] command byte.

bit 15-8 **STEP[4n+1]<7:0>:** STEP[4n+1] Command Byte bits(1)
A queue location for storage of the STEP[4n+1] command byte.

bit 7-0 **STEP[4n]<7:0>:** STEP[4n] Command Byte bits(1)
A queue location for storage of the STEP command byte.

Note 1: These bits are read only when the module is executing step commands (PTGSTRT = 1).

 © 2020 Microchip Technology Inc.

TABLE 14-2: PTG OUTPUT DESCRIPTION

PTG Output Number	PTG Output Description
PTGO0	Reserved
PTGO1	Reserved
PTGO2	Reserved
PTGO3	Reserved
PTGO4	Reserved
PTGO5	Reserved
PTGO6	Reserved
PTGO7	Reserved
PTGO8	Reserved
PTGO9	To CVD
PTGO10	Reserved
PTGO11	Reserved
PTGO12	Sample Trigger for ADC
PTGO13	Sample Trigger for ADC
PTGO14	Sample Trigger for ADC
PTGO15	Sample Trigger for ADC
PTGO16	Reserved
PTGO17	Reserved
PTGO18	Reserved
PTGO19	Reserved
PTGO20	Reserved
PTGO21	Reserved
PTGO22	Reserved
PTGO23	Reserved
PTGO24	Reserved
PTGO25	Reserved
PTGO26	Reserved
PTGO27	Reserved
PTGO28	Output Buffer Data
PTGO29	Output Buffer Data
PTGO30	Output Buffer Data
PTGO31	Output Buffer Data

Note: PTGO28 to PTGO31 are available on PPS. Refer to Table 13-3.

 © 2020 Microchip Technology Inc.

15.0 TIMER1

Note: This data sheet summarizes the features of the PIC32MZ W1 family of devices. It is not intended to be a comprehensive reference source. To complement the information in this data sheet, refer to **Section 14. "Timers"** (DS60001105) in the *"PIC32 Family Reference Manual"*, which is available from the Microchip web site (www.microchip.com/PIC32).

PIC32MZ W1 device features one synchronous/asynchronous 16-bit timer that can operate as a free-running interval timer for various timing applications and counting external events. This timer can also be used with the low-power SOSC for real-time clock applications.

The following modes are supported by Timer1:

- Synchronous Internal Timer mode
- Synchronous Internal Gated Timer mode
- Synchronous External Timer mode
- Asynchronous External Timer mode

Timer1 has the following key features:

- Selectable clock prescaler
- Timer operation during Sleep and Idle modes
- Fast bit manipulation using CLR, SET and INV registers
- Asynchronous mode can be used with the SOSC to function as a real-time clock
- ADC (CVD) event trigger
- Timer1 can be used as a wake up source from the Sleep mode

FIGURE 15-1: TIMER1 BLOCK DIAGRAM

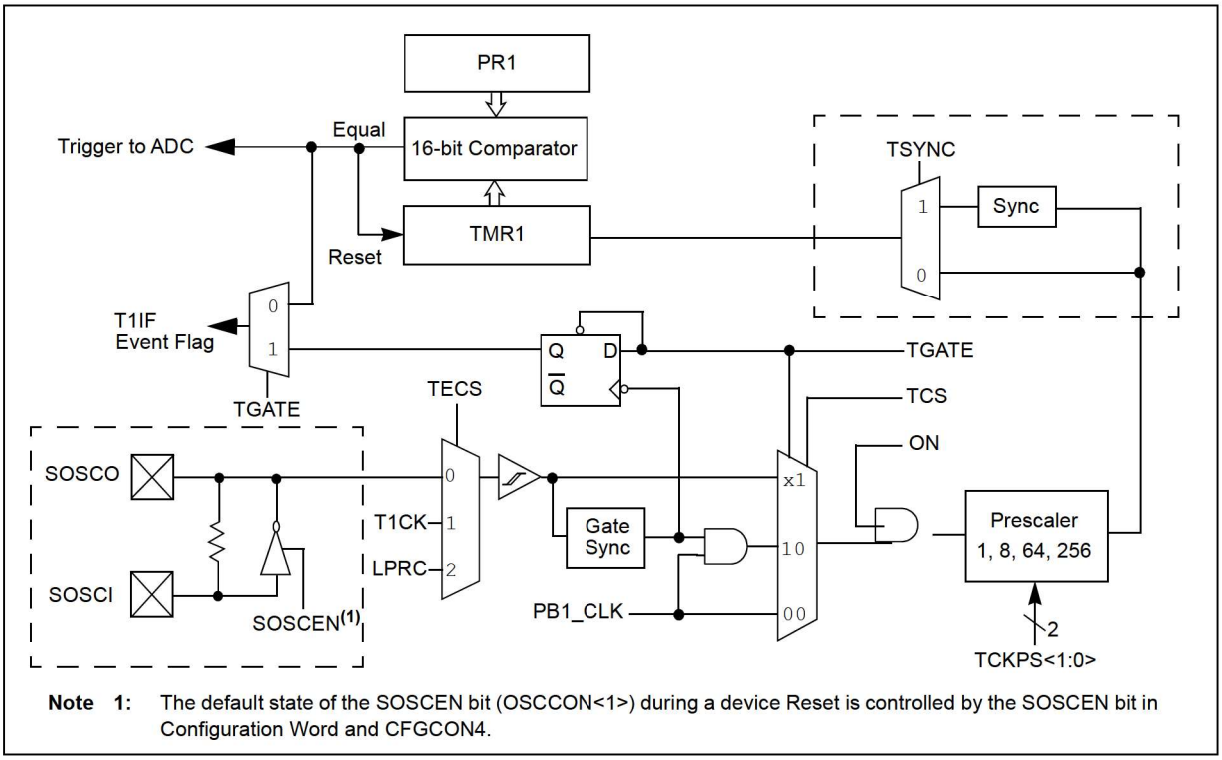

Note 1: The default state of the SOSCEN bit (OSCCON<1>) during a device Reset is controlled by the SOSCEN bit in Configuration Word and CFGCON4.

15.1 Timer1 Control Register

TABLE 15-1: TIMER1 REGISTER MAP

Virtual Address (BF80_#)	Register Name(1)	Bit Range	Bits																All Resets
			31/15	30/14	29/13	28/12	27/11	26/10	25/9	24/8	23/7	22/6	21/5	20/4	19/3	18/2	17/1	16/0	
2000	T1CON	31:16	—	—	—	—	—	—	—	—	—	—	—	—	—	—	—	—	0000
		15:0	ON	—	SIDL	TWDIS	TWIP	—	TECS<1:0>		TGATE	—	TCKPS<1:0>		—	TSYNC	TCS	—	0000
2010	TMR1	31:16	TMR1<31:16>																0000
		15:0	TMR1<15:0>																0000
2020	PR1	31:16	PR1<31:16>																0000
		15:0	PR1<15:0>																FFFF

Legend: x = unknown value on Reset; — = unimplemented, read as '0'. Reset values are shown in hexadecimal.

Note 1: All registers in this table have corresponding CLR, SET and INV registers at their virtual addresses, plus offsets of 0x4, 0x8 and 0xC, respectively. See **Section 13.3 "CLR, SET, and INV Registers"** for more information.

© 2020 Microchip Technology Inc.

REGISTER 15-1: T1CON: TYPE A TIMER CONTROL REGISTER

Bit Range	Bit 31/23/15/7	Bit 30/22/14/6	Bit 29/21/13/5	Bit 28/20/12/4	Bit 27/19/11/3	Bit 26/18/10/2	Bit 25/17/9/1	Bit 24/16/8/0
31:24	U-0	U-0	U-0	U-0	U-0	U-0	U-0	U-0
	—	—	—	—	—	—	—	—
23:16	U-0	U-0	U-0	U-0	U-0	U-0	U-0	U-0
	—	—	—	—	—	—	—	—
15:8	R/W-0	U-0	R/W-0	R/W-0	R-0	U-0	R/W-0	R/W-0
	ON	—	SIDL	TWDIS	TWIP	—	TECS<1:0>	
7:0	R/W-0	U-0	R/W-0	R/W-0	U-0	R/W-0	R/W-0	U-0
	TGATE	—	TCKPS<1:0>		—	TSYNC	TCS	—

Legend:			
R = Readable bit	W = Writable bit	U = Unimplemented bit, read as '0'	
-n = Value at POR	'1' = Bit is set	'0' = Bit is cleared	x = Bit is unknown

bit 31-16 **Unimplemented:** Read as '0'

bit 15 **ON:** TMR1 bit
1 = TMR1 is enabled
0 = TMR1 is disabled

bit 14 **Unimplemented:** Read as '0'

bit 13 **SIDL:** Stop in Idle Mode bit
1 = Discontinue operation when device enters Idle mode
0 = Continue operation even in Idle mode

bit 12 **TWDIS:** Asynchronous Timer Write Disable bit
1 = Writes to TMR1 are ignored until pending write operation completes
0 = Back-to-back writes are enabled (legacy asynchronous timer functionality)

bit 11 **TWIP:** Asynchronous Timer Write in Progress bit
In Asynchronous Timer mode:
1 = Asynchronous write to TMR1 register in progress
0 = Asynchronous write to TMR1 register complete
In Synchronous Timer mode:
This bit is read as '0'.

bit 10 **Unimplemented:** Read as '0'

bit 9-8 **TECS<1:0>:** TMR1 Extended Clock Select bits
11= Reserved
10= LPRC
01= T1CK pin
00= SOSC

bit 7 **TGATE:** Timer Gated Time Accumulation Enable bit
When TCS = 1:
This bit is ignored.
When TCS = 0:
1 = Gated time accumulation is enabled
0 = Gated time accumulation is disabled

bit 6 **Unimplemented:** Read as '0'

REGISTER 15-1: T1CON: TYPE A TIMER CONTROL REGISTER (CONTINUED)

bit 5-4 **TCKPS<1:0>:** Timer Input Clock Prescale Select bits
11 = 1:256 prescale value
10 = 1:64 prescale value
01 = 1:8 prescale value
00 = 1:1 prescale value

bit 3 **Unimplemented:** Read as '0'

bit 2 **TSYNC:** Timer External Clock Input Synchronization Selection bit
When TCS = 1:
1 = External clock input is synchronized
0 = External clock input is not synchronized
When TCS = 0:
This bit is ignored.

bit 1 **TCS:** Timer Clock Source Select bit
1 = External clock from TECS
0 = Internal peripheral clock

bit 0 **Unimplemented:** Read as '0'

 © 2020 Microchip Technology Inc.

16.0 TIMER2/3, TIMER4/5, AND TIMER6/7

Note: This data sheet summarizes the features of the PIC32MZ W1 family of devices. It is not intended to be a comprehensive reference source. To complement the information in this data sheet, refer to **Section 14. "Timers"** (DS60001105) of the *"PIC32 Family Reference Manual"*, which is available from the Microchip web site (www.microchip.com/PIC32).

The PIC32MZ W1 family of devices features six synchronous 16-bit timers (default) that can operate as a free-running interval timer for various timing applications and counting external events.

The following modes are supported:

- Synchronous Internal 16-bit Timer mode
- Synchronous Internal 16-bit Gated Timer mode
- Synchronous External 16-bit Timer mode

Three 32-bit synchronous timers are available by combining Timer2 with Timer3, Timer4 with Timer5, Timer6 with Timer7.

The 32-bit timers can operate in one of three modes:

- Synchronous Internal 32-bit Timer mode
- Synchronous Internal 32-bit Gated Timer mode
- Synchronous External 32-bit Timer mode

These timers have the following key features:

- Selectable clock prescaler
- Timers operational during CPU Idle mode
- Time base for input capture and output compare modules (Timer2 Through Timer7 only)
- ADC event trigger (Timer3 and Timer5 only)
- Fast bit manipulation using CLR, SET, and INV registers

FIGURE 16-1: TIMER2 THROUGH TIMER7 BLOCK DIAGRAM (16-BIT)

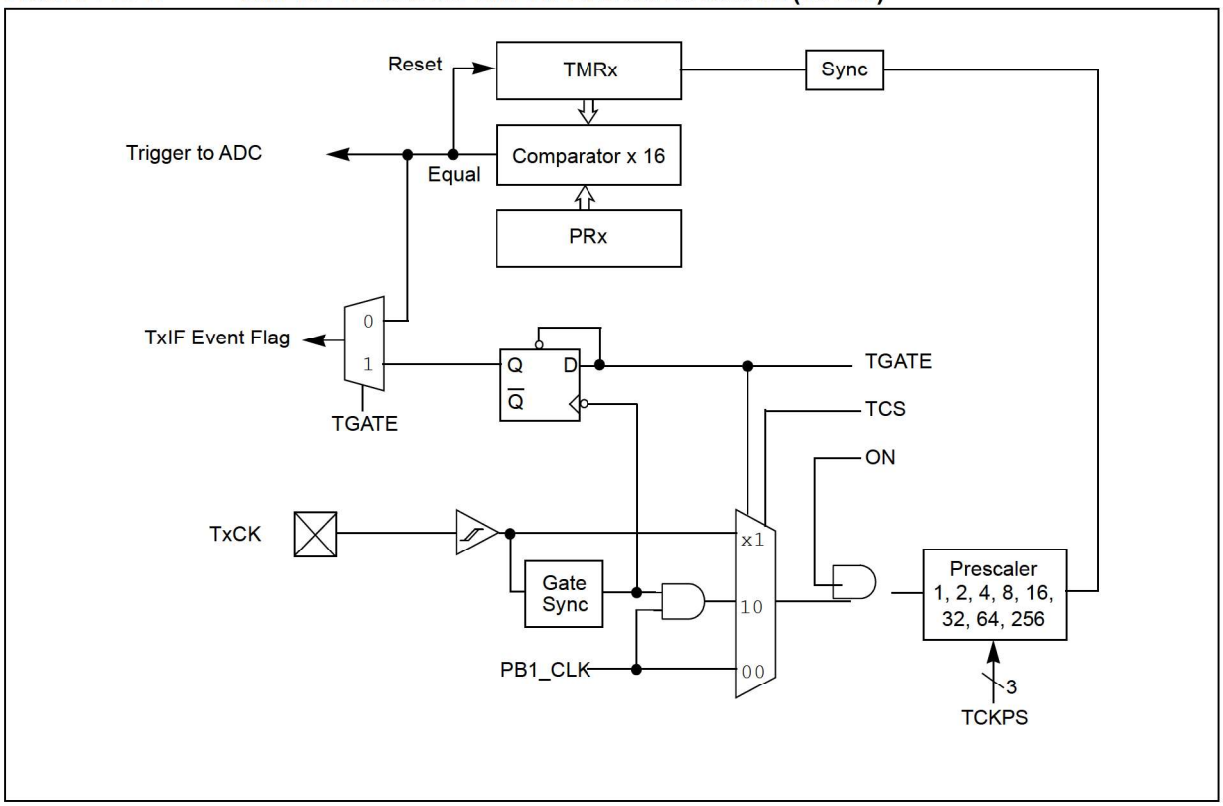

FIGURE 16-2: TIMER2/3, TIMER4/5, AND TIMER6/7, BLOCK DIAGRAM (32-BIT)

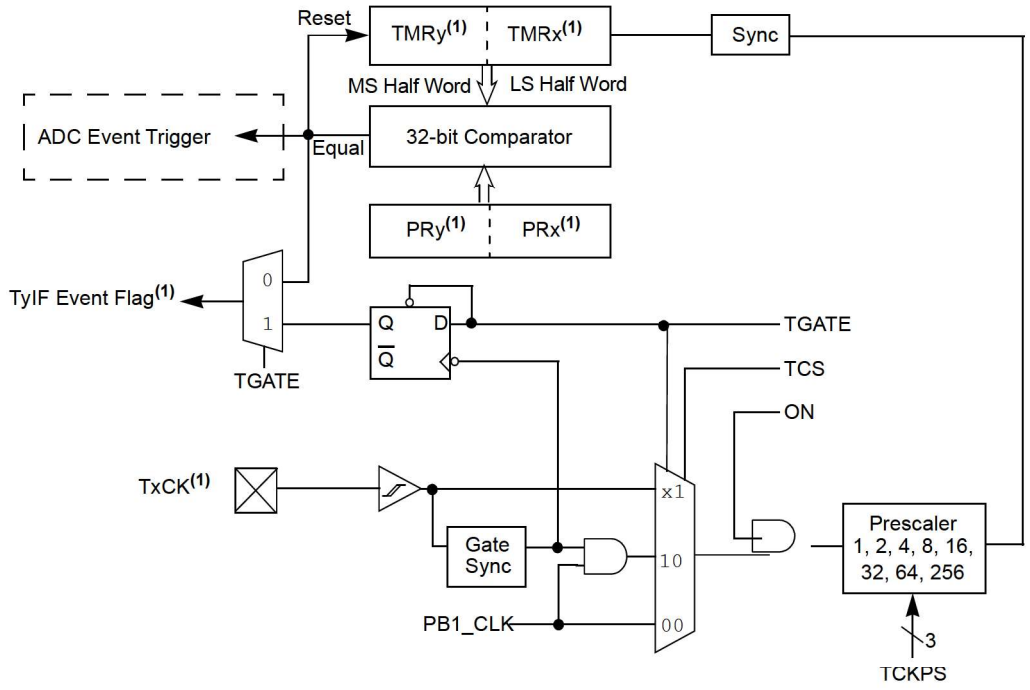

Note 1: In this diagram, 'x' represents Timer2, 4, or 6, and 'y' represents Timer3, 5, or 7.

 © 2020 Microchip Technology Inc.

16.1 Timer2-Timer7 Control Registers

TABLE 16-1: TIMER2 THROUGH TIMER7 REGISTER MAP

Virtual Address (BF80_#)	Register Name(1)	Bit Range	Bits															All Resets
			31/15	30/14	29/13	28/12	27/11	26/10	25/9	24/8	23/7	22/6	21/5	20/4	19/3	18/2	17/1	16/0	
2200	T2CON	31:16	—	—	—	—	—	—	—	—	—	—	—	—	—	—	—	—	0000
		15:0	ON	—	SIDL	—	—	—	—	—	TGATE	TCKPS<2:0>			T32	—	TCS	—	0000
2210	TMR2	31:16	—	—	—	—	—	—	—	—	—	—	—	—	—	—	—	—	0000
		15:0	TMR2<15:0>																0000
2220	PR2	31:16	—	—	—	—	—	—	—	—	—	—	—	—	—	—	—	—	0000
		15:0	PR2<15:0>																FFFF
2400	T3CON	31:16	—	—	—	—	—	—	—	—	—	—	—	—	—	—	—	—	0000
		15:0	ON	—	SIDL	—	—	—	—	—	TGATE	TCKPS<2:0>			—	—	TCS	—	0000
2410	TMR3	31:16	—	—	—	—	—	—	—	—	—	—	—	—	—	—	—	—	0000
		15:0	TMR3<15:0>																0000
2420	PR3	31:16	—	—	—	—	—	—	—	—	—	—	—	—	—	—	—	—	0000
		15:0	PR3<15:0>																FFFF
2600	T4CON	31:16	—	—	—	—	—	—	—	—	—	—	—	—	—	—	—	—	0000
		15:0	ON	—	SIDL	—	—	—	—	—	TGATE	TCKPS<2:0>			T32	—	TCS	—	0000
2610	TMR4	31:16	—	—	—	—	—	—	—	—	—	—	—	—	—	—	—	—	0000
		15:0	TMR4<15:0>																0000
2620	PR4	31:16	—	—	—	—	—	—	—	—	—	—	—	—	—	—	—	—	0000
		15:0	PR4<15:0>																FFFF
2800	T5CON	31:16	—	—	—	—	—	—	—	—	—	—	—	—	—	—	—	—	0000
		15:0	ON	—	SIDL	—	—	—	—	—	TGATE	TCKPS<2:0>			—	—	TCS	—	0000
2810	TMR5	31:16	—	—	—	—	—	—	—	—	—	—	—	—	—	—	—	—	0000
		15:0	TMR5<15:0>																0000
2820	PR5	31:16	—	—	—	—	—	—	—	—	—	—	—	—	—	—	—	—	0000
		15:0	PR5<15:0>																FFFF
2A00	T6CON	31:16	—	—	—	—	—	—	—	—	—	—	—	—	—	—	—	—	0000
		15:0	ON	—	SIDL	—	—	—	—	—	TGATE	TCKPS<2:0>			T32	—	TCS	—	0000
2A10	TMR6	31:16	—	—	—	—	—	—	—	—	—	—	—	—	—	—	—	—	0000
		15:0	TMR6<15:0>																0000
2A20	PR6	31:16	—	—	—	—	—	—	—	—	—	—	—	—	—	—	—	—	0000
		15:0	PR6<15:0>																FFFF
2C00	T7CON	31:16	—	—	—	—	—	—	—	—	—	—	—	—	—	—	—	—	0000
		15:0	ON	—	SIDL	—	—	—	—	—	TGATE	TCKPS<2:0>			—	—	TCS	—	0000

Legend: x = unknown value on Reset; — = unimplemented, read as '0'. Reset values are shown in hexadecimal.

Note 1: All registers in this table have corresponding CLR, SET and INV registers at their virtual addresses, plus offsets of 0x4, 0x8 and 0xC, respectively. See **Section 13.3 "CLR, SET, and INV Registers"** for more information.

© 2020 Microchip Technology Inc.

TABLE 16-1: TIMER2 THROUGH TIMER7 REGISTER MAP (CONTINUED)

Virtual Address (BF80_#)	Register Name(1)	Bit Range	Bits																All Resets
			31/15	30/14	29/13	28/12	27/11	26/10	25/9	24/8	23/7	22/6	21/5	20/4	19/3	18/2	17/1	16/0	
2C10	TMR7	31:16	—	—	—	—	—	—	—	—	—	—	—	—	—	—	—	—	0000
		15:0	TMR7<15:0>																0000
2C20	PR7	31:16	—	—	—	—	—	—	—	—	—	—	—	—	—	—	—	—	0000
		15:0	PR7<15:0>																FFFF

Legend: x = unknown value on Reset; — = unimplemented, read as '0'. Reset values are shown in hexadecimal.

Note 1: All registers in this table have corresponding CLR, SET and INV registers at their virtual addresses, plus offsets of 0x4, 0x8 and 0xC, respectively. See **Section 13.3 "CLR, SET, and INV Registers"** for more information.

© 2020 Microchip Technology Inc.

REGISTER 16-1: TxCON: TYPE B TIMER CONTROL REGISTER (x = 2-7)

Bit Range	Bit 31/23/15/7	Bit 30/22/14/6	Bit 29/21/13/5	Bit 28/20/12/4	Bit 27/19/11/3	Bit 26/18/10/2	Bit 25/17/9/1	Bit 24/16/8/0
31:24	U-0	U-0	U-0	U-0	U-0	U-0	U-0	U-0
	—	—	—	—	—	—	—	—
23:16	U-0	U-0	U-0	U-0	U-0	U-0	U-0	U-0
	—	—	—	—	—	—	—	—
15:8	R/W-0	U-0	R/W-0	U-0	U-0	U-0	U-0	U-0
	ON(1)	—	SIDL(2)	—	—	—	—	—
7:0	R/W-0	R/W-0	R/W-0	R/W-0	R/W-0	U-0	R/W-0	U-0
	TGATE(1)	TCKPS<2:0>(1)			T32(3)	—	TCS(1)	—

Legend:			
R = Readable bit	W = Writable bit	U = Unimplemented bit, read as '0'	
-n = Value at POR	'1' = Bit is set	'0' = Bit is cleared	x = Bit is unknown

bit 31-16 **Unimplemented:** Read as '0'

bit 15 **ON:** Timer On bit(1)
1 = Module is enabled
0 = Module is disabled

bit 14 **Unimplemented:** Read as '0'

bit 13 **SIDL:** Stop in Idle Mode bit(2)
1 = Discontinue operation when device enters Idle mode
0 = Continue operation even in Idle mode

bit 12-8 **Unimplemented:** Read as '0'

bit 7 **TGATE:** Timer Gated Time Accumulation Enable bit(1)
When TCS = 1:
This bit is ignored and is read as '0'.
When TCS = 0:
1 = Gated time accumulation is enabled
0 = Gated time accumulation is disabled

bit 6-4 **TCKPS<2:0>:** Timer Input Clock Prescale Select bits(1)
111 = 1:256 prescale value
110 = 1:64 prescale value
101 = 1:32 prescale value
100 = 1:16 prescale value
011 = 1:8 prescale value
010 = 1:4 prescale value
001 = 1:2 prescale value
000 = 1:1 prescale value

bit 3 **T32:** 32-Bit Timer Mode Select bit(3)
1 = Odd numbered and even numbered timers form a 32-bit timer
0 = Odd numbered and even numbered timers form separate 16-bit timers

bit 2 **Unimplemented:** Read as '0'

Note 1: While operating in 32-bit mode, this bit has no effect for odd numbered timers (Timer1, Timer3, Timer5, and Timer7). All timer functions are set through the even numbered timers.

2: While operating in 32-bit mode, this bit must be cleared on odd numbered timers to enable the 32-bit timer in Idle mode.

3: This bit is available only on even numbered timers (Timer2, Timer4, and Timer6).

REGISTER 16-1: TxCON: TYPE B TIMER CONTROL REGISTER (x = 2-7) (CONTINUED)

bit 1 **TCS:** Timer Clock Source Select bit(1)
1 = External clock from TxCK pin
0 = Internal peripheral clock

bit 0 **Unimplemented:** Read as '0'

Note 1: While operating in 32-bit mode, this bit has no effect for odd numbered timers (Timer1, Timer3, Timer5, and Timer7). All timer functions are set through the even numbered timers.

2: While operating in 32-bit mode, this bit must be cleared on odd numbered timers to enable the 32-bit timer in Idle mode.

3: This bit is available only on even numbered timers (Timer2, Timer4, and Timer6).

 © 2020 Microchip Technology Inc.

17.0 DEADMAN TIMER (DMT)

Note:	This data sheet summarizes the features of the PIC32MZ W1 family of devices. It is not intended to be a comprehensive reference source. To complement the information in this data sheet, refer to **Section 9. "Watchdog, Deadman, and Power-up Timers"** (DS60001114) in the *"PIC32 Family Reference Manual"*, which is available from the Microchip web site (www.microchip.com/PIC32).

The primary function of DMT is to reset the processor in the event of a software malfunction. The DMT is a free-running instruction fetch timer, which is clocked whenever an instruction fetch occurs until a count match occurs. Instructions are not fetched when the processor is in Sleep mode.

The DMT consists of a 32-bit counter with a time-out count match value as specified by the DMTCNT[4:0] bits in the CFGCON2 Configuration register.

The DMT is typically used in mission critical and safety critical applications, where any single failure of the software functionality and sequencing must be detected.

The DMT is enabled by setting the CFGCON2.DMTEN Configuration register bit or DMTCON.ON register bit. A device Reset is required to disable the DMT.

DMT has the following key features:

- 32-bit configurable count-limit based upon counting instructions fetched
- Hardware and software enabled
- Two instruction sequence to clear timer
- 32-bit configurable window to clear timer
- Timer "instruction fetched" counter may be read

Figure 17-1 shows the block diagram of the DMT module.

FIGURE 17-1: DMT BLOCK DIAGRAM

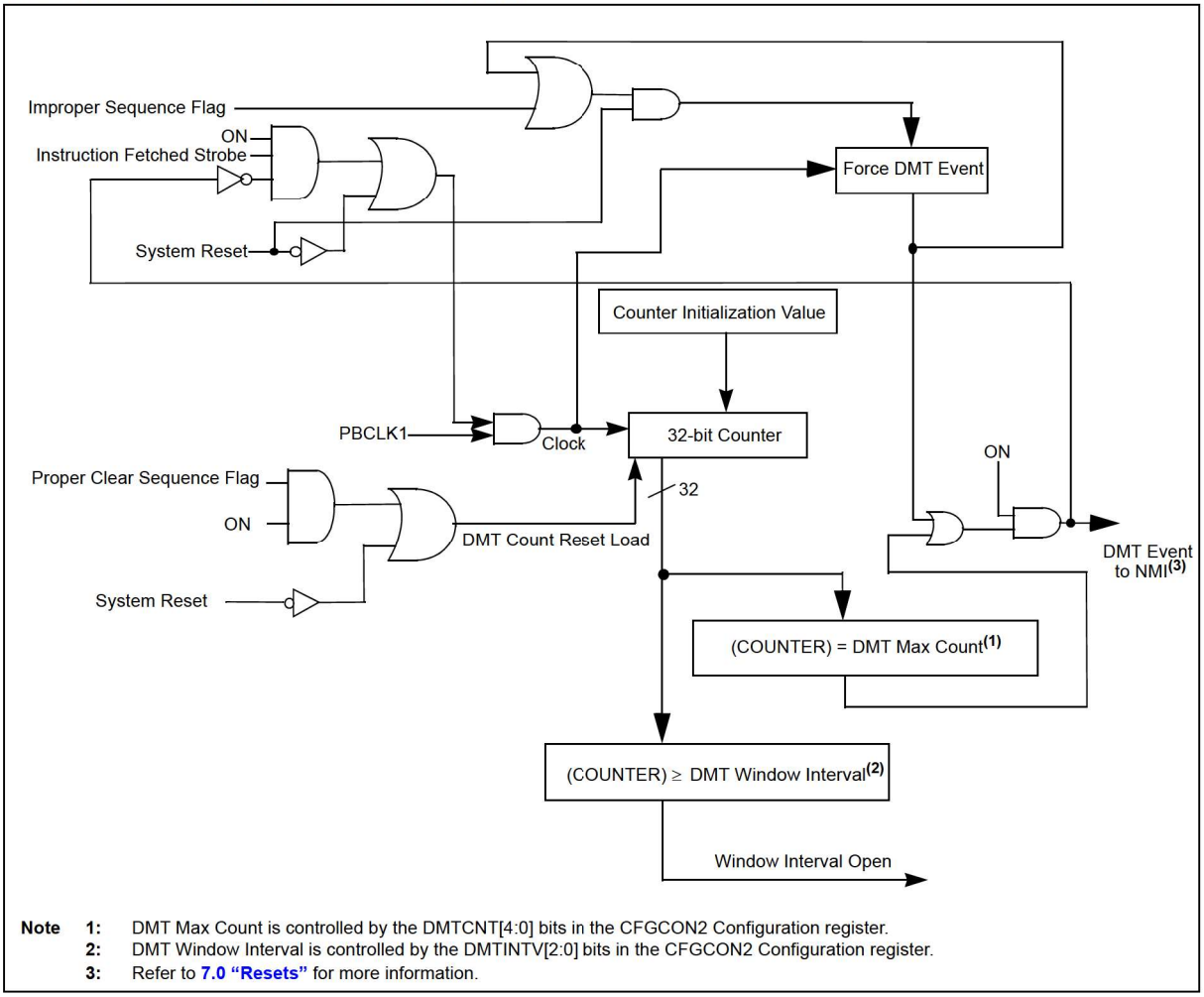

Note 1: DMT Max Count is controlled by the DMTCNT[4:0] bits in the CFGCON2 Configuration register.
2: DMT Window Interval is controlled by the DMTINTV[2:0] bits in the CFGCON2 Configuration register.
3: Refer to **7.0 "Resets"** for more information.

17.1 DMT Control Registers

TABLE 17-1: DMT REGISTER MAP

Virtual Address (BF80_#)	Register Name	Bit Range	Bits																All Resets
			31/15	30/14	29/13	28/12	27/11	26/10	25/9	24/8	23/7	22/6	21/5	20/4	19/3	18/2	17/1	16/0	
0A00	DMTCON	31:16	—	—	—	—	—	—	—	—	—	—	—	—	—	—	—	—	0000
		15:0	ON	—	—	—	—	—	—	—	—	—	—	—	—	—	—	—	x000
0A10	DMTPRECLR	31:16	—	—	—	—	—	—	—	—	—	—	—	—	—	—	—	—	0000
		15:0	STEP1<7:0>								—	—	—	—	—	—	—	—	0000
0A20	DMTCLR	31:16	—	—	—	—	—	—	—	—	—	—	—	—	—	—	—	—	0000
		15:0	—	—	—	—	—	—	—	—	STEP2<7:0>								0000
0A30	DMTSTAT	31:16	—	—	—	—	—	—	—	—	—	—	—	—	—	—	—	—	0000
		15:0	—	—	—	—	—	—	—	—	BAD1	BAD2	DMTEVENT	—	—	—	—	WINOPN	0000
0A40	DMTCNT	31:16	COUNTER<31:16>																0000
		15:0	COUNTER<15:0>																0000
0A60	DMTPSCNT	31:16	PSCNT<31:16>																0000
		15:0	PSCNT<15:0>																00xx
0A70	DMTPSINTV	31:16	PSINTV<31:16>																0000
		15:0	PSINTV<15:0>																000x

Legend: x = unknown value on Reset; — = unimplemented, read as '0'. Reset values are shown in hexadecimal.

© 2020 Microchip Technology Inc.

REGISTER 17-1: DMTCON: DEADMAN TIMER CONTROL REGISTER

Bit Range	Bit 31/23/15/7	Bit 30/22/14/6	Bit 29/21/13/5	Bit 28/20/12/4	Bit 27/19/11/3	Bit 26/18/10/2	Bit 25/17/9/1	Bit 24/16/8/0
31:24	U-0	U-0	U-0	U-0	U-0	U-0	U-0	U-0
	—	—	—	—	—	—	—	—
23:16	U-0	U-0	U-0	U-0	U-0	U-0	U-0	U-0
	—	—	—	—	—	—	—	—
15:8	R/W-y	U-0	U-0	U-0	U-0	U-0	U-0	U-0
	ON(1)	—	—	—	—	—	—	—
7:0	U-0	U-0	U-0	U-0	U-0	U-0	U-0	U-0
	—	—	—	—	—	—	—	—

Legend:		y = Value set from Configuration bits on POR
R = Readable bit	W = Writable bit	U = Unimplemented bit, read as '0'
-n = Value at POR	'1' = Bit is set	'0' = Bit is cleared x = Bit is unknown

bit 31-16 **Unimplemented:** Read as '0'

bit 15 **ON:** DMT Module Enable bit(1)
1 = DMT module is enabled
0 = DMT module is disabled
The Reset value of this bit is determined by the setting of the DMTEN bit (CFGCON2<3>).

bit 13-0 **Unimplemented:** Read as '0'

Note 1: This bit only has control when DMTEN (CFGCON2<3>) = 0.

REGISTER 17-2: DMTPRECLR: DEADMAN TIMER PRECLEAR REGISTER

Bit Range	Bit 31/23/15/7	Bit 30/22/14/6	Bit 29/21/13/5	Bit 28/20/12/4	Bit 27/19/11/3	Bit 26/18/10/2	Bit 25/17/9/1	Bit 24/16/8/0
31:24	U-0	U-0	U-0	U-0	U-0	U-0	U-0	U-0
	—	—	—	—	—	—	—	—
23:16	U-0	U-0	U-0	U-0	U-0	U-0	U-0	U-0
	—	—	—	—	—	—	—	—
15:8	R/W-0	R/W-0	R/W-0	R/W-0	R/W-0	R/W-0	R/W-0	R/W-0
	STEP1<7:0>							
7:0	U-0	U-0	U-0	U-0	U-0	U-0	U-0	U-0
	—	—	—	—	—	—	—	—

Legend:		
R = Readable bit	W = Writable bit	U = Unimplemented bit, read as '0'
-n = Value at POR	'1' = Bit is set	'0' = Bit is cleared x = Bit is unknown

bit 31-16 **Unimplemented:** Read as '0'

bit 15-8 **STEP1<7:0>:** Preclear Enable bits
01000000 = Enables the DMT preclear (Step 1)
All other write patterns = Set BAD1 flag.
These bits are cleared when a DMT Reset event occurs. STEP1<7:0> is also cleared if the STEP2<7:0> bits are loaded with the correct value in the correct sequence.

bit 7-0 **Unimplemented:** Read as '0'

REGISTER 17-3: DMTCLR: DEADMAN TIMER CLEAR REGISTER

Bit Range	Bit 31/23/15/7	Bit 30/22/14/6	Bit 29/21/13/5	Bit 28/20/12/4	Bit 27/19/11/3	Bit 26/18/10/2	Bit 25/17/9/1	Bit 24/16/8/0
31:24	U-0	U-0	U-0	U-0	U-0	U-0	U-0	U-0
	—	—	—	—	—	—	—	—
23:16	U-0	U-0	U-0	U-0	U-0	U-0	U-0	U-0
	—	—	—	—	—	—	—	—
15:8	U-0	U-0	U-0	U-0	U-0	U-0	U-0	U-0
	—	—	—	—	—	—	—	—
7:0	R/W-0	R/W-0	R/W-0	R/W-0	R/W-0	R/W-0	R/W-0	R/W-0
	STEP2<7:0>							

Legend:			
R = Readable bit	W = Writable bit	U = Unimplemented bit, read as '0'	
-n = Value at POR	'1' = Bit is set	'0' = Bit is cleared	x = Bit is unknown

bit 31-8 **Unimplemented:** Read as '0'

bit 7-0 **STEP2<7:0>:** Clear Timer bits

00001000 = Clears STEP1<7:0>, STEP2<7:0> and the DMT if, and only if, preceded by correct loading of STEP1<7:0> bits in the correct sequence. The write to these bits may be verified by reading DMTCNT and observing the counter being reset.

All other write patterns = Set BAD2 bit, the value of STEP1<7:0> will remain unchanged, and the new value being written STEP2<7:0> will be captured. These bits are also cleared when a DMT Reset event occurs.
If the STEP2<7:0> bits are written without preceding with a correct loading of STEP1<7:0> bits, the BAD1 bit is set.

 © 2020 Microchip Technology Inc.

REGISTER 17-4: DMTSTAT: DEADMAN TIMER STATUS REGISTER

Bit Range	Bit 31/23/15/7	Bit 30/22/14/6	Bit 29/21/13/5	Bit 28/20/12/4	Bit 27/19/11/3	Bit 26/18/10/2	Bit 25/17/9/1	Bit 24/16/8/0
31:24	U-0	U-0	U-0	U-0	U-0	U-0	U-0	U-0
	—	—	—	—	—	—	—	—
23:16	U-0	U-0	U-0	U-0	U-0	U-0	U-0	U-0
	—	—	—	—	—	—	—	—
15:8	U-0	U-0	U-0	U-0	U-0	U-0	U-0	U-0
	—	—	—	—	—	—	—	—
7:0	R-0, HC, HS	R-0, HC, HS	R-0, HC, HS	U-0	U-0	U-0	U-0	R-0, HC, HS
	BAD1	BAD2	DMTEVENT	—	—	—	—	WINOPN

Legend:	HC = Hardware Cleared	HS = Hardware Set	
R = Readable bit	W = Writable bit	U = Unimplemented bit, read as '0'	
-n = Value at POR	'1' = Bit is set	'0' = Bit is cleared	x = Bit is unknown

bit 31-8 **Unimplemented:** Read as '0'

bit 7 **BAD1:** Bad STEP1<7:0> Value Detect bit
1 = Incorrect STEP1<7:0> value or out of sequence write to STEP2<7:0> is detected
0 = Incorrect STEP1<7:0> value is not detected

bit 6 **BAD2:** Bad STEP2<7:0> Value Detect bit
1 = Incorrect STEP2<7:0> value is detected
0 = Incorrect STEP2<7:0> value is not detected

bit 5 **DMTEVENT:** DMT Event bit
1 = DMT event is detected (counter expired or bad STEP1<7:0> or STEP2<7:0> value is entered prior to counter increment)
0 = DMT even is not detected

bit 4-1 **Unimplemented:** Read as '0'

bit 0 **WINOPN:** DMT Clear Window bit
1 = DMT clear window is open
0 = DMT clear window is not open

REGISTER 17-5: DMTCNT: DEADMAN TIMER COUNT REGISTER

Bit Range	Bit 31/23/15/7	Bit 30/22/14/6	Bit 29/21/13/5	Bit 28/20/12/4	Bit 27/19/11/3	Bit 26/18/10/2	Bit 25/17/9/1	Bit 24/16/8/0
31:24	R-0	R-0	R-0	R-0	R-0	R-0	R-0	R-0
	COUNTER<31:24>							
23:16	R-0	R-0	R-0	R-0	R-0	R-0	R-0	R-0
	COUNTER<23:16>							
15:8	R-0	R-0	R-0	R-0	R-0	R-0	R-0	R-0
	COUNTER<15:8>							
7:0	R-0	R-0	R-0	R-0	R-0	R-0	R-0	R-0
	COUNTER<7:0>							

Legend:			
R = Readable bit	W = Writable bit	U = Unimplemented bit, read as '0'	
-n = Value at POR	'1' = Bit is set	'0' = Bit is cleared	x = Bit is unknown

bit 31-0 **COUNTER<31:0>:** Read current contents of DMT counter

REGISTER 17-6: DMTPSCNT: POST STATUS CONFIGURE DMT COUNT STATUS REGISTER

Bit Range	Bit 31/23/15/7	Bit 30/22/14/6	Bit 29/21/13/5	Bit 28/20/12/4	Bit 27/19/11/3	Bit 26/18/10/2	Bit 25/17/9/1	Bit 24/16/8/0
31:24	R-0	R-0	R-0	R-0	R-0	R-0	R-0	R-0
	PSCNT<31:24>							
23:16	R-0	R-0	R-0	R-0	R-0	R-0	R-0	R-0
	PSCNT<23:16>							
15:8	R-0	R-0	R-0	R-0	R-0	R-0	R-0	R-0
	PSCNT<15:8>							
7:0	R-0	R-0	R-0	R-y	R-y	R-y	R-y	R-y
	PSCNT<7:0>							

Legend:			y = Value set from Configuration bits on POR
R = Readable bit	W = Writable bit	U = Unimplemented bit, read as '0'	
-n = Value at POR	'1' = Bit is set	'0' = Bit is cleared	x = Bit is unknown

bit 31-0 **PSCNT<31:0>:** DMT Instruction Count Value Configuration Status bits
This is always the value of the DMTCNT<4:0> bits in the CFGCON2 Configuration register.

 © 2020 Microchip Technology Inc.

REGISTER 17-7: DMTPSINTV: POST STATUS CONFIGURE DMT INTERVAL STATUS REGISTER

Bit Range	Bit 31/23/15/7	Bit 30/22/14/6	Bit 29/21/13/5	Bit 28/20/12/4	Bit 27/19/11/3	Bit 26/18/10/2	Bit 25/17/9/1	Bit 24/16/8/0
31:24	R-0	R-0	R-0	R-0	R-0	R-0	R-0	R-0
	PSINTV<31:24>							
23:16	R-0	R-0	R-0	R-0	R-0	R-0	R-0	R-0
	PSINTV<23:16>							
15:8	R-0	R-0	R-0	R-0	R-0	R-0	R-0	R-0
	PSINTV<15:8>							
7:0	R-0	R-0	R-0	R-0	R-0	R-y	R-y	R-y
	PSINTV<7:0>							

Legend:		y = Value set from Configuration bits on POR	
R = Readable bit	W = Writable bit	U = Unimplemented bit, read as '0'	
-n = Value at POR	'1' = Bit is set	'0' = Bit is cleared	x = Bit is unknown

bit 31-0 **PSINTV<31:0>:** DMT Window Interval Configuration Status bits
This is always the value of the DMTINTV<2:0> bits in the CFGCON2 Configuration register.

 © 2020 Microchip Technology Inc.

18.0 WATCHDOG TIMER (WDT)

Note: This data sheet summarizes the features of the PIC32MZ W1 family of devices. It is not intended to be a comprehensive reference source. To complement the information in this data sheet, refer to **Section 9. "Watchdog, Deadman, and Power-up Timers"** (DS60001114) in the *"PIC32 Family Reference Manual"*, which is available from the Microchip web site (www.microchip.com/PIC32).

When enabled, the WDT operates from the internal LPRC clock source and can be used to detect system software malfunctions by resetting the device if the WDT is not cleared periodically in software. Various WDT time-out periods can be selected using the WDT postscaler. The WDT can also be used to wake the device from Sleep or Idle mode.

The key features of the WDT module are:

- Configuration or software controlled
- Up to 32 configurable time-out periods
- Can wake the device from Sleep or Idle mode
- Independent Run and Sleep mode counters
- WDT may use alternate clock source and postscaler for Run mode counter
- Independent 5-bit postscalers for Run and Sleep mode counters
- Hardware and software enabled
- Two clock sources
- Windowed WDT

Note: When the CPU is running on the same clock or clock frequency as the WDT (LPRC), the lowest pre-scale values may not allow the CPU to have enough time to reset the WDT before it expires.

FIGURE 18-1: WDT BLOCK DIAGRAM

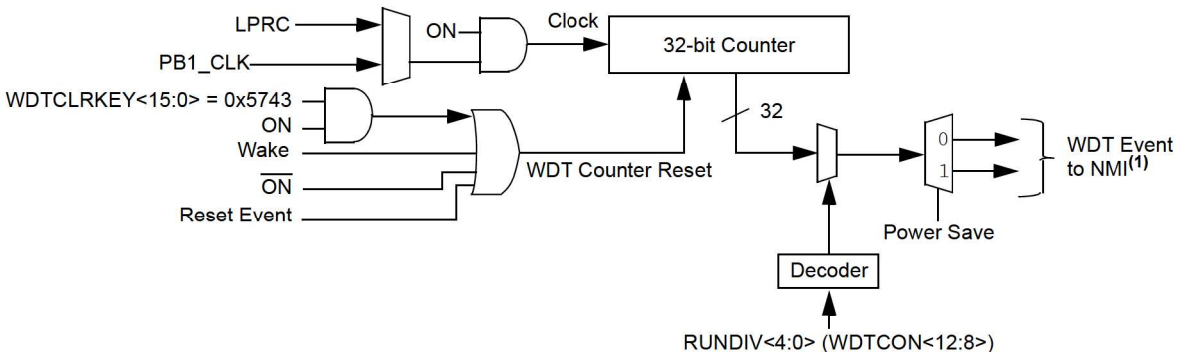

Note 1: Refer to **7.0 "Resets"** for more information.

18.1 WDT Configuration

The WDT is configured using the following config register bits/fields:

- Window size (CFGCON2.FWINSZ[1:0])
- Windowing disable (CFGCON2.WINDIS)
- Post-scaler selection (CFGCON2.WDTPS[4:0])

18.2 WDT Control Registers

TABLE 18-1: WDT REGISTER MAP

Virtual Address (BF80_#)	Register Name	Bit Range	Bits																All Resets
			31/15	30/14	29/13	28/12	27/11	26/10	25/9	24/8	23/7	22/6	21/5	20/4	19/3	18/2	17/1	16/0	
0800	WDTCON(1)	31:16	WDTCLRKEY<15:0>																0000
		15:0	ON	—	—	RUNDIV<4:0>					—	—	—	—	—	—	—	WDTWINEN	xx00

Legend: x = unknown value on Reset; — = unimplemented, read as '0'. Reset values are shown in hexadecimal.

Note 1: This register has corresponding CLR, SET and INV registers at its virtual address, plus an offset of 0x4, 0x8 and 0xC, respectively. See **13.0 "I/O Ports"** for more information.

REGISTER 18-1: WDTCON: WATCHDOG TIMER CONTROL REGISTER

Bit Range	Bit 31/23/15/7	Bit 30/22/14/6	Bit 29/21/13/5	Bit 28/20/12/4	Bit 27/19/11/3	Bit 26/18/10/2	Bit 25/17/9/1	Bit 24/16/8/0
31:24	W-0	W-0	W-0	W-0	W-0	W-0	W-0	W-0
	WDTCLRKEY<15:8>							
23:16	W-0	W-0	W-0	W-0	W-0	W-0	W-0	W-0
	WDTCLRKEY<7:0>							
15:8	R/W-y	U-0	U-0	R-y	R-y	R-y	R-y	R-y
	ON(1)	—	—	RUNDIV<4:0>				
7:0	U-0	U-0	U-0	U-0	U-0	U-0	U-0	R/W-0
	—	—	—	—	—	—	—	WDTWINEN

Legend:	y = Values set from Configuration bits on POR		
R = Readable bit	W = Writable bit	U = Unimplemented bit, read as '0'	
-n = Value at POR	'1' = Bit is set	'0' = Bit is cleared	x = Bit is unknown

bit 31-16 **WDTCLRKEY<16:0>:** Watchdog Timer Clear Key bits
To clear the WDT to prevent a time-out, software must write the value 0x5743 to this location using a single 16-bit write.

bit 15 **ON:** Watchdog Timer Enable bit(1)
1 = WDT is enabled
0 = WDT is disabled

bit 14-13 **Unimplemented:** Read as '0'

bit 12-8 **RUNDIV<4:0>:** Watchdog Timer Postscaler Value bits
On Reset, these bits are set to the values of the WDTPS<4:0> Configuration bits in CFGCON2.

bit 7-1 **Unimplemented:** Read as '0'

bit 0 **WDTWINEN:** Watchdog Timer Window Enable bit
1 = Enable windowed WDT
0 = Disable windowed WDT

Note 1: This bit only has control when the WDTEN bit (CFGCON2<23>) = 0.

 © 2020 Microchip Technology Inc.

19.0 INPUT CAPTURE

Note: This data sheet summarizes the features of the PIC32MZ W1 family of devices. It is not intended to be a comprehensive reference source. To complement the information in this data sheet, refer to **Section 15. "Input Capture"** (DS60001122) of the *"PIC32 Family Reference Manual"*, which is available from the Microchip web site (www.microchip.com/PIC32).

The input capture module is useful in applications requiring frequency (period) and pulse measurement.

This module captures the 16-bit value of the selected Time Base registers when an event occurs at the ICx pin.

The input capture module has the following features:

- Capture every rising and falling edge
- Capture every 4th and 16th rising edge
- Capture timer values based on internal or external clocks
- TMR2 or TMR3 time-based selection
- Device wakes up from capture pin during Sleep and Idle modes
- Interrupt on input capture event
- 4-word FIFO buffer for capture values; interrupt optionally generated after 1, 2, 3, or 4 buffer locations are filled
- Input capture can also be used to provide additional sources of external interrupts
- Capability to trigger PTG

FIGURE 19-1: INPUT CAPTURE BLOCK DIAGRAM

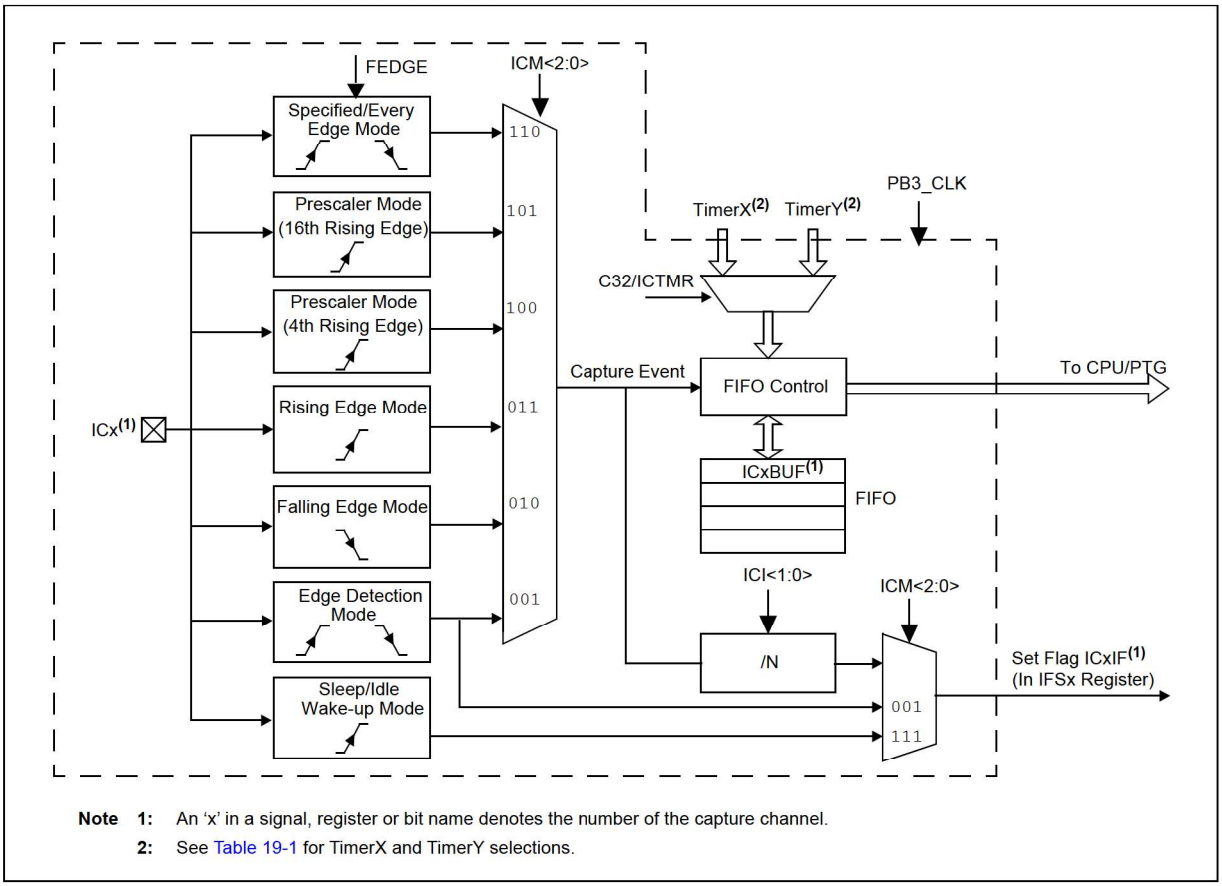

Note 1: An 'x' in a signal, register or bit name denotes the number of the capture channel.

2: See Table 19-1 for TimerX and TimerY selections.

The timer source for each input capture module depends on the setting of the IC_ACLK bit in the CFGCON0 register. The available configurations are shown in Table 19-1.

When IC_ACLK = 0, all ICAP may choose between the same 2 timer sources. When IC_ACLK = 1, groups of ICAP may choose between a variation of timer sources.

TABLE 19-1: ICAP CLOCK SOURCES

IC_ACLK	ICAP instance	X (MSB) clock/data	Y (MSB) clock/data
0	ICAP1-4	TMR3	TMR2
1	ICAP1-2	TMR5	TMR4
	ICAP3-4	TMR7	TMR6

 © 2020 Microchip Technology Inc.

19.1 Input Capture Control Registers

TABLE 19-2: INPUT CAPTURE 1 THROUGH INPUT CAPTURE 9 REGISTER MAP

Virtual Address (BF84_#)	Register Name	Bit Range	Bits																All Resets
			31/15	30/14	29/13	28/12	27/11	26/10	25/9	24/8	23/7	22/6	21/5	20/4	19/3	18/2	17/1	16/0	
1000	IC1CON(1)	31:16	—	—	—	—	—	—	—	—	—	—	—	—	—	—	—	—	0000
		15:0	ON	—	SIDL	—	—	—	FEDGE	C32	ICTMR	ICI<1:0>		ICOV	ICBNE	ICM<2:0>			0000
1010	IC1BUF	31:16	IC1BUF<31:16>																xxxx
		15:0	IC1BUF<16:0>																xxxx
1200	IC2CON(1)	31:16	—	—	—	—	—	—	—	—	—	—	—	—	—	—	—	—	0000
		15:0	ON	—	SIDL	—	—	—	FEDGE	C32	ICTMR	ICI<1:0>		ICOV	ICBNE	ICM<2:0>			0000
1210	IC2BUF	31:16	IC2BUF<31:16>																xxxx
		15:0	IC2BUF<16:0>																xxxx
1400	IC3CON(1)	31:16	—	—	—	—	—	—	—	—	—	—	—	—	—	—	—	—	0000
		15:0	ON	—	SIDL	—	—	—	FEDGE	C32	ICTMR	ICI<1:0>		ICOV	ICBNE	ICM<2:0>			0000
1410	IC3BUF	31:16	IC3BUF<31:16>																xxxx
		15:0	IC3BUF<16:0>																xxxx
1600	IC4CON(1)	31:16	—	—	—	—	—	—	—	—	—	—	—	—	—	—	—	—	0000
		15:0	ON	—	SIDL	—	—	—	FEDGE	C32	ICTMR	ICI<1:0>		ICOV	ICBNE	ICM<2:0>			0000
1610	IC4BUF	31:16	IC4BUF<31:16>																xxxx
		15:0	IC4BUF<16:0>																xxxx

Legend: x = unknown value on Reset; — = unimplemented, read as '0'. Reset values are shown in hexadecimal.

Note 1: This register has corresponding CLR, SET and INV registers at its virtual address, plus an offset of 0x4, 0x8 and 0xC, respectively. See **Section 13.3 "CLR, SET, and INV Registers"** for more information.

© 2020 Microchip Technology Inc.

REGISTER 19-1: ICxCON: INPUT CAPTURE x CONTROL REGISTER

Bit Range	Bit 31/23/15/7	Bit 30/22/14/6	Bit 29/21/13/5	Bit 28/20/12/4	Bit 27/19/11/3	Bit 26/18/10/2	Bit 25/17/9/1	Bit 24/16/8/0
31:24	U-0	U-0	U-0	U-0	U-0	U-0	U-0	U-0
	—	—	—	—	—	—	—	—
23:16	U-0	U-0	U-0	U-0	U-0	U-0	U-0	U-0
	—	—	—	—	—	—	—	—
15:8	R/W-0	U-0	R/W-0	U-0	U-0	U-0	R/W-0	R/W-0
	ON	—	SIDL	—	—	—	FEDGE	C32
7:0	R/W-0	R/W-0	R/W-0	R-0	R-0	R/W-0	R/W-0	R/W-0
	ICTMR(1)	ICI<1:0>		ICOV	ICBNE	ICM<2:0>		

Legend:		
R = Readable bit	W = Writable bit	U = Unimplemented bit
-n = Bit Value at POR: (‘0’, ‘1’, x = unknown)	P = Programmable bit	r = Reserved bit

bit 31-16 **Unimplemented:** Read as ‘0’

bit 15 **ON:** Input Capture Module Enable bit
- 1 = Module is enabled
- 0 = Disable and Reset module, disable clocks, disable interrupt generation and allow SFR modifications

bit 14 **Unimplemented:** Read as ‘0’

bit 13 **SIDL:** Stop in Idle Control bit
- 1 = Halt in CPU Idle mode
- 0 = Continue to operate in CPU Idle mode

bit 12-10 **Unimplemented:** Read as ‘0’

bit 9 **FEDGE:** First Capture Edge Select bit (only used in mode 6, ICM<2:0> = 110)
- 1 = Capture rising edge first
- 0 = Capture falling edge first

bit 8 **C32:** 32-bit Capture Select bit
- 1 = 32-bit timer resource capture
- 0 = 16-bit timer resource capture

bit 7 **ICTMR:** Timer Select bit (Does not affect timer selection when C32 (ICxCON<8>) is ‘1’)(1)
- 0 = Timery is the counter source for capture
- 1 = Timerx is the counter source for capture

bit 6-5 **ICI<1:0>:** Interrupt Control bits
- 11 = Interrupt on every fourth capture event
- 10 = Interrupt on every third capture event
- 01 = Interrupt on every second capture event
- 00 = Interrupt on every capture event

bit 4 **ICOV:** Input Capture Overflow Status Flag bit (read-only)
- 1 = Input capture overflow is occurred
- 0 = No input capture overflow is occurred

bit 3 **ICBNE:** Input Capture Buffer Not Empty Status bit (read-only)
- 1 = Input capture buffer is not empty; at least one more capture value can be read
- 0 = Input capture buffer is empty

bit 2-0 **ICM<2:0>:** Input Capture Mode Select bits
- 111 = Interrupt-Only mode (only supported while in Sleep mode or Idle mode)
- 110 = Simple Capture Event mode – every edge, specified edge first and every edge thereafter
- 101 = Prescaled Capture Event mode – every sixteenth rising edge
- 100 = Prescaled Capture Event mode – every fourth rising edge
- 011 = Simple Capture Event mode – every rising edge
- 010 = Simple Capture Event mode – every falling edge
- 001 = Edge Detect mode – every edge (rising and falling)
- 000 = Input Capture module is disabled

Note 1: Refer to Table 19-1 for TimerX and TimerY selections.

 © 2020 Microchip Technology Inc.

20.0 OUTPUT COMPARE

Note: This data sheet summarizes the features of the PIC32MZ W1 device. It is not intended to be a comprehensive reference source. To complement the information in this data sheet, refer to **Section 16. "Output Compare"** (DS60001111) in the *"PIC32 Family Reference Manual"*, which is available from the Microchip web site (www.microchip.com/PIC32).

The output compare module is used to generate a single pulse or a train of pulses in response to selected time base events.

For all modes of operation, the output compare module compares the values stored in the OCxR and/or the OCxRS registers to the value in the selected timer. When a match occurs, the output compare module generates an event based on the selected mode of operation.

The output compare module has the following features:

- Multiple output compare modules in a device
- Programmable interrupt generation on compare event
- Single and Dual Compare modes
- Single and continuous output pulse generation
- Glitchless Pulse Width Modulation (PWM) mode
  - with fault protection input
  - without fault protection input
- Interrupt on output compare/PWM event
- Interrupt on PWM fault detect condition
- Programmable selection of 16-bit or 32-bit time bases
- Can operate from either of two available 16-bit time bases or a single 32-bit time base
- ADC event trigger
- Capability to trigger PTG

Operating modes are determined by setting the OCxM bits. Note that the OCxM bits must be switched through the OCxM = 000, before the next mode is selected.

FIGURE 20-1: OUTPUT COMPARE MODULE BLOCK DIAGRAM

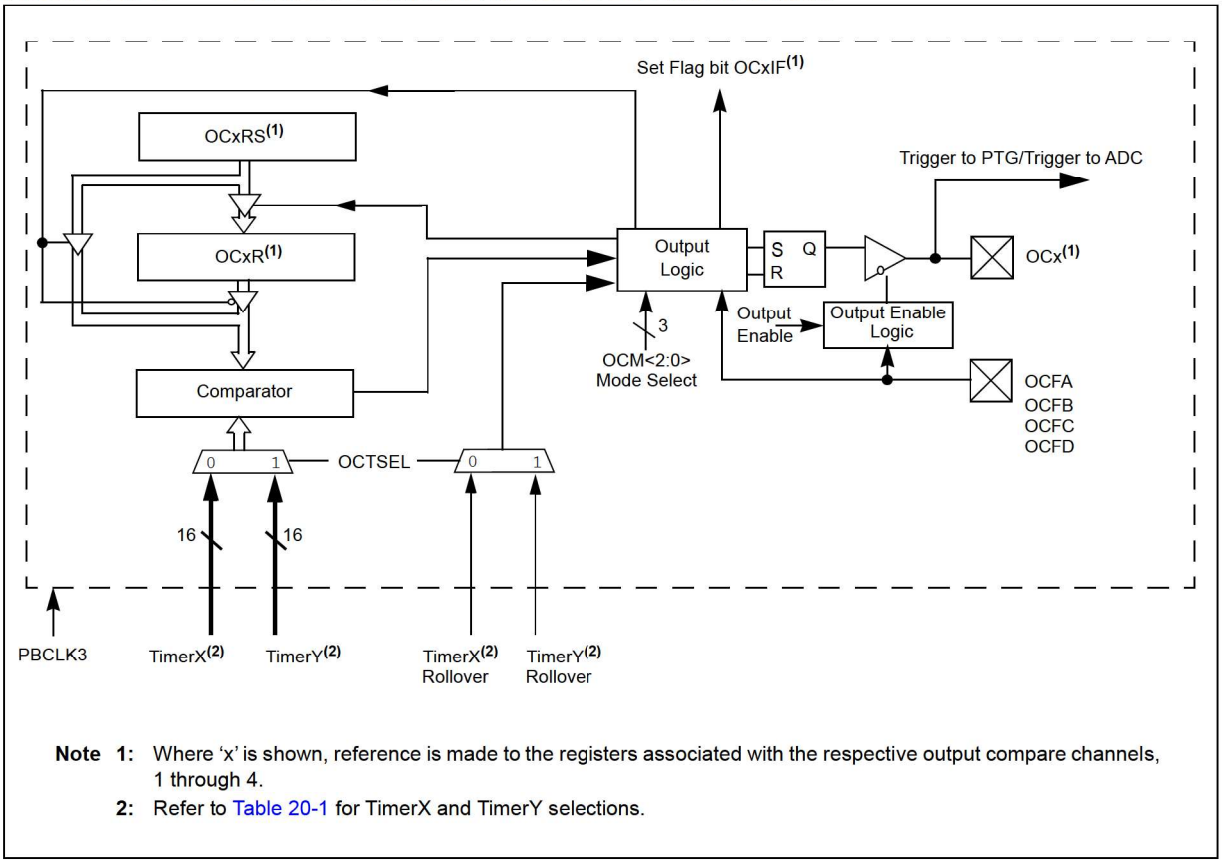

Note 1: Where 'x' is shown, reference is made to the registers associated with the respective output compare channels, 1 through 4.

2: Refer to Table 20-1 for TimerX and TimerY selections.

The timer source for each output compare module depends on the setting of the OC_ACLK bit in the CFGCON0 register. The available configurations are shown in Table 20-1.

When OC_ACLK = 0, all OCMP may choose between the same 2 timer sources. When OC_ACLK = 1, groups of OCMP may choose between a variation of timer sources.

TABLE 20-1: OCMP CLOCK SOURCES

OC_ACLK	OCMP Instance	X (MSB) Clock/Data	Y (MSB) Clock/Data
0	OCMP1-4	TMR3	TMR2
1	OCMP1-2	TMR5	TMR4
	OCMP3-4	TMR7	TMR6

 © 2020 Microchip Technology Inc.

20.1 Output Compare Control Registers

TABLE 20-2: OUTPUT COMPARE 1 THROUGH OUTPUT COMPARE 9 REGISTER MAP

Virtual Address (BF84_#)	Register Name(1)	Bit Range	Bits																All Resets
			31/15	30/14	29/13	28/12	27/11	26/10	25/9	24/8	23/7	22/6	21/5	20/4	19/3	18/2	17/1	16/0	
2000	OC1CON	31:16	—	—	—	—	—	—	—	—	—	—	—	—	—	—	—	—	0000
		15:0	ON	—	SIDL	—	—	—	—	—	—	—	OC32	OCFLT	OCTSEL	OCM<2:0>			0000
2010	OC1R	31:16	OC1R<31:16>																xxxx
		15:0	OC1R<15:0>																xxxx
2020	OC1RS	31:16	OC1RS<31:16>																xxxx
		15:0	OC1RS<15:0>																xxxx
2200	OC2CON	31:16	—	—	—	—	—	—	—	—	—	—	—	—	—	—	—	—	0000
		15:0	ON	—	SIDL	—	—	—	—	—	—	—	OC32	OCFLT	OCTSEL	OCM<2:0>			0000
2210	OC2R	31:16	OC2R<31:16>																xxxx
		15:0	OC2R<15:0>																xxxx
2220	OC2RS	31:16	OC2RS<31:16>																xxxx
		15:0	OC2RS<15:0>																xxxx
2400	OC3CON	31:16	—	—	—	—	—	—	—	—	—	—	—	—	—	—	—	—	0000
		15:0	ON	—	SIDL	—	—	—	—	—	—	—	OC32	OCFLT	OCTSEL	OCM<2:0>			0000
2410	OC3R	31:16	OC3R<31:16>																xxxx
		15:0	OC3R<15:0>																xxxx
2420	OC3RS	31:16	OC3RS<31:16>																xxxx
		15:0	OC3RS<15:0>																xxxx
2600	OC4CON	31:16	—	—	—	—	—	—	—	—	—	—	—	—	—	—	—	—	0000
		15:0	ON	—	SIDL	—	—	—	—	—	—	—	OC32	OCFLT	OCTSEL	OCM<2:0>			0000
2610	OC4R	31:16	OC4R<31:16>																xxxx
		15:0	OC4R<15:0>																xxxx
2620	OC4RS	31:16	OC4RS<31:16>																xxxx
		15:0	OC4RS<15:0>																xxxx

Legend: x = unknown value on Reset; — = unimplemented, read as '0'. Reset values are shown in hexadecimal.

Note 1: All registers in this table have corresponding CLR, SET and INV registers at their virtual addresses, plus offsets of 0x4, 0x8 and 0xC, respectively. See **Section 13.3 "CLR, SET, and INV Registers"** for more information.

© 2020 Microchip Technology Inc.

REGISTER 20-1: OCxCON: OUTPUT COMPARE 'x' CONTROL REGISTER (x=1-4)

Bit Range	Bit 31/23/15/7	Bit 30/22/14/6	Bit 29/21/13/5	Bit 28/20/12/4	Bit 27/19/11/3	Bit 26/18/10/2	Bit 25/17/9/1	Bit 24/16/8/0
31:24	U-0	U-0	U-0	U-0	U-0	U-0	U-0	U-0
	—	—	—	—	—	—	—	—
23:16	U-0	U-0	U-0	U-0	U-0	U-0	U-0	U-0
	—	—	—	—	—	—	—	—
15:8	R/W-0	U-0	R/W-0	U-0	U-0	U-0	U-0	U-0
	ON	—	SIDL	—	—	—	—	—
7:0	U-0	U-0	R/W-0	R-0	R/W-0	R/W-0	R/W-0	R/W-0
	—	—	OC32	OCFLT(1)	OCTSEL(2)	OCM<2:0>		

Legend:			
R = Readable bit	W = Writable bit	U = Unimplemented bit, read as '0'	
-n = Value at POR	'1' = Bit is set	'0' = Bit is cleared	x = Bit is unknown

bit 31-16 **Unimplemented:** Read as '0'

bit 15 **ON:** Output Compare Peripheral On bit
- 1 = Output compare peripheral is enabled
- 0 = Output compare peripheral is disabled

bit 14 **Unimplemented:** Read as '0'

bit 13 **SIDL:** Stop in Idle Mode bit
- 1 = Discontinue operation when CPU enters Idle mode
- 0 = Continue operation in Idle mode

bit 12-6 **Unimplemented:** Read as '0'

bit 5 **OC32:** 32-bit Compare Mode bit
- 1 = OCxR<31:0> and/or OCxRS<31:0> are used for comparisons to the 32-bit timer source
- 0 = OCxR<15:0> and OCxRS<15:0> are used for comparisons to the 16-bit timer source

bit 4 **OCFLT:** PWM Fault Condition Status bit(1)
- 1 = PWM Fault condition has occurred (cleared in hardware only)
- 0 = No PWM Fault condition has occurred

bit 3 **OCTSEL:** Output Compare Timer Select bit(2)
- 1 = TimerY is the clock source for this output compare module
- 0 = TimerX is the clock source for this output compare module

bit 2-0 **OCM<2:0>:** Output Compare Mode Select bits
- 111 = PWM mode on OCx; fault pin is enabled
- 110 = PWM mode on OCx; fault pin is disabled
- 101 = Initialize OCx pin low; generate continuous output pulses on OCx pin
- 100 = Initialize OCx pin low; generate single output pulse on OCx pin
- 011 = Compare event toggles OCx pin
- 010 = Initialize OCx pin high; compare event forces OCx pin low
- 001 = Initialize OCx pin low; compare event forces OCx pin high
- 000 = Output compare peripheral is disabled but continues to draw current

Note 1: This bit is only used when OCM<2:0> = '111'. It is read as '0' in all other modes.

2: Refer to Table 20-1 for TimerX and TimerY selections.

 © 2020 Microchip Technology Inc.

21.0 SERIAL PERIPHERAL INTERFACE (SPI) AND INTER-IC SOUND (I^2S)

Note: This data sheet summarizes the features of the PIC32MZ W1 device. It is not intended to be a comprehensive reference source. To complement the information in this data sheet, refer to **Section 23. "Serial Peripheral Interface (SPI)"** (DS60001106) in the *"PIC32 Family Reference Manual"*, which is available from the Microchip web site (www.microchip.com/PIC32).

SPI/I^2S module is a synchronous serial interface that is useful for communicating with external peripherals and other MCU devices, as well as digital audio devices. These peripheral devices may be Serial EEPROMs, Shift registers, display drivers,
ADCs, and so on.

SPI1 has two paths to device pins. One using PPS (slower operation) and another using dedicated pins (faster operation). The dedicated pins can operate at a maximum of 40 MHz whereas PPS pins (slower SPI) can operate up to 20 MHz. SPI2 supports single path to device pins using PPS.

The following are key features of the SPI module:

- Native 32-bit peripheral bus architecture, scalable to 16-bit and 8-bit access
- Master and Slave mode support
- Full-duplex operation with 8/16/32-bit communication
- Status bit to indicate activity of SPI
- Four different clock formats
- Interrupt event on every byte/half-word/word received
- Separate transmit and receive buffer events
- Framed SPI protocol support
- DMA support
- SDO pin disable option
- 16 byte deep enhanced buffer operation
- Persistent Interrupt events based on internal status bits
- Enhanced FSYNC operation
- Audio CODEC support
  - I^2S protocol
  - Left justified
  - Right justified
  - PCM

FIGURE 21-1: SPI/I^2S MODULE BLOCK DIAGRAM

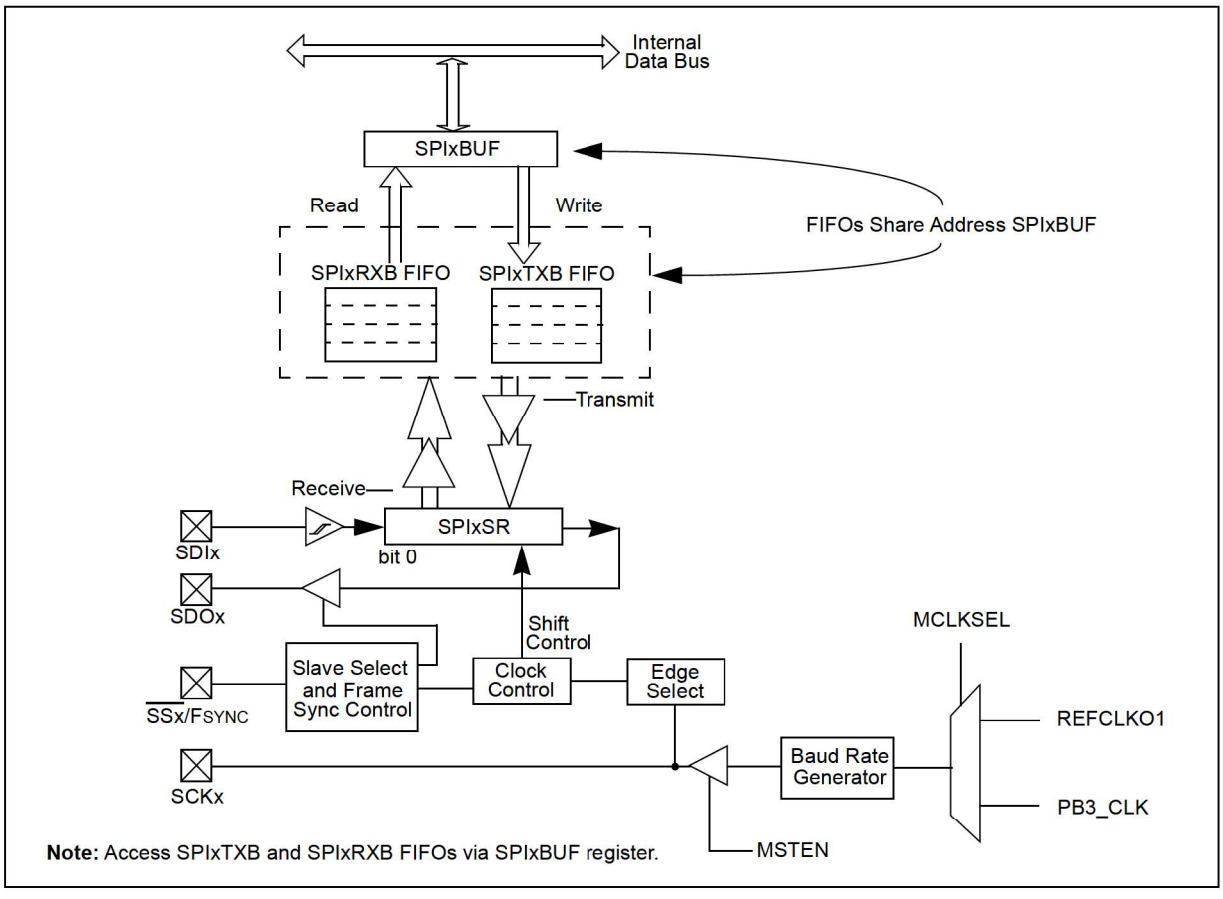

Note: Access SPIxTXB and SPIxRXB FIFOs via SPIxBUF register.

21.1 SPI Control Registers

TABLE 21-1: SPI1 AND SPI2 REGISTER MAP

Virtual Address (BF84_#)	Register Name(1)	Bit Range	Bits																All Resets
			31/15	30/14	29/13	28/12	27/11	26/10	25/9	24/8	23/7	22/6	21/5	20/4	19/3	18/2	17/1	16/0	
0C00	SPI1CON	31:16	FRMEN	FRMSYNC	FRMPOL	MSSEN	FRMSYPW	FRMCNT<2:0>			MCLKSEL	—	—	—	—	—	SPIFE	ENHBUF	0000
		15:0	ON	—	SIDL	DISSDO	MODE32	MODE16	SMP	CKE	SSEN	CKP	MSTEN	DISSDI	STXISEL<1:0>		SRXISEL<1:0>		0000
0C10	SPI1STAT	31:16	—	—	—	RXBUFELM<4:0>					—	—	—	TXBUFELM<4:0>					0000
		15:0	—	—	—	FRMERR	SPIBUSY	—	—	SPITUR	SRMT	SPIROV	SPIRBE	—	SPITBE	—	SPITBF	SPIRBF	0008
0C20	SPI1BUF	31:16	DATA<31:16>																0000
		15:0	DATA<15:0>																0000
0C30	SPI1BRG	31:16	—	—	—	—	—	—	—	—	—	—	—	—	—	—	—	—	0000
		15:0	—	—	—	BRG<12:0>													0000
0C40	SPI1CON2	31:16	—	—	—	—	—	—	—	—	—	—	—	—	—	—	—	—	0000
		15:0	SPISGNEXT	—	—	FRMERREN	SPIROVEN	SPITUREN	IGNROV	IGNTUR	AUDEN	—	—	—	AUDMONO	—	AUDMOD<1:0>		0000
0E00	SPI2CON	31:16	FRMEN	FRMSYNC	FRMPOL	MSSEN	FRMSYPW	FRMCNT<2:0>			MCLKSEL	—	—	—	—	—	SPIFE	ENHBUF	0000
		15:0	ON	—	SIDL	DISSDO	MODE32	MODE16	SMP	CKE	SSEN	CKP	MSTEN	DISSDI	STXISEL<1:0>		SRXISEL<1:0>		0000
0E10	SPI2STAT	31:16	—	—	—	RXBUFELM<4:0>					—	—	—	TXBUFELM<4:0>					0000
		15:0	—	—	—	FRMERR	SPIBUSY	—	—	SPITUR	SRMT	SPIROV	SPIRBE	—	SPITBE	—	SPITBF	SPIRBF	0008
0E20	SPI2BUF	31:16	DATA<31:0>																0000
		15:0																	0000
0E30	SPI2BRG	31:16	—	—	—	—	—	—	—	—	—	—	—	—	—	—	—	—	0000
		15:0	—	—	—	—	—	—	—	BRG<8:0>									0000
0E40	SPI2CON2	31:16	—	—	—	—	—	—	—	—	—	—	—	—	—	—	—	—	0000
		15:0	SPISGNEXT	—	—	FRMERREN	SPIROVEN	SPITUREN	IGNROV	IGNTUR	AUDEN	—	—	—	AUDMONO	—	AUDMOD<1:0>		0000

Legend: x = unknown value on Reset; — = unimplemented, read as '0'. Reset values are shown in hexadecimal.

Note 1: All registers in this table except SPIxBUF have corresponding CLR, SET and INV registers at their virtual addresses, plus offsets of 0x4, 0x8 and 0xC, respectively. See **Section 13.3 "CLR, SET, and INV Registers"** for more information.

© 2020 Microchip Technology Inc.

REGISTER 21-1: SPIxCON: SPI CONTROL REGISTER

Bit Range	Bit 31/23/15/7	Bit 30/22/14/6	Bit 29/21/13/5	Bit 28/20/12/4	Bit 27/19/11/3	Bit 26/18/10/2	Bit 25/17/9/1	Bit 24/16/8/0
31:24	R/W-0	R/W-0	R/W-0	R/W-0	R/W-0	R/W-0	R/W-0	R/W-0
	FRMEN	FRMSYNC	FRMPOL	MSSEN	FRMSYPW	FRMCNT<2:0>		
23:16	R/W-0	U-0	U-0	U-0	U-0	U-0	R/W-0	R/W-0
	MCLKSEL(1)	—	—	—	—	—	SPIFE	ENHBUF(1)
15:8	R/W-0	U-0	R/W-0	R/W-0	R/W-0	R/W-0	R/W-0	R/W-0
	ON	—	SIDL	DISSDO(4)	MODE32	MODE16	SMP	CKE(2)
7:0	R/W-0	R/W-0	R/W-0	R/W-0	R/W-0	R/W-0	R/W-0	R/W-0
	SSEN	CKP(3)	MSTEN	DISSDI(4)	STXISEL<1:0>		SRXISEL<1:0>	

Legend:			
R = Readable bit	W = Writable bit	U = Unimplemented bit, read as '0'	
-n = Value at POR	'1' = Bit is set	'0' = Bit is cleared	x = Bit is unknown

bit 31 **FRMEN:** Framed SPI Support bit
1 = Framed SPI support is enabled ($\overline{SSx}$ pin used as FSYNC input/output)
0 = Framed SPI support is disabled

bit 30 **FRMSYNC:** Frame Sync Pulse Direction Control on $\overline{SSx}$ pin bit (Framed SPI mode only)
1 = Frame sync pulse input (Slave mode)
0 = Frame sync pulse output (Master mode)

bit 29 **FRMPOL:** Frame Sync/Slave Select Polarity bit (Framed SPI or Master Transmit modes only)
1 = Frame pulse or $\overline{SSx}$ pin is active-high
0 = Frame pulse or $\overline{SSx}$ is active-low

bit 28 **MSSEN:** Master Mode Slave Select Enable bit
1 = Slave select SPI support is enabled. The $\overline{SS}$ pin is automatically driven during transmission in Master mode. Polarity is determined by the FRMPOL bit.
0 = Slave select SPI support is disabled.

bit 27 **FRMSYPW:** Frame Sync Pulse Width bit
1 = Frame sync pulse is one character wide
0 = Frame sync pulse is one clock wide

bit 26-24 **FRMCNT<2:0>:** Frame Sync Pulse Counter bits. Controls the number of data characters transmitted per pulse. This bit is only valid in Framed mode.
111 = Reserved
110 = Reserved
101 = Generates a frame sync pulse on every 32 data characters
100 = Generates a frame sync pulse on every 16 data characters
011 = Generates a frame sync pulse on every 8 data characters
010 = Generates a frame sync pulse on every 4 data characters
001 = Generates a frame sync pulse on every 2 data characters
000 = Generates a frame sync pulse on every data character

bit 23 **MCLKSEL:** Master Clock Enable bit(1)
1 = REFCLKO1 is used by the Baud Rate Generator
0 = PBCLK3 is used by the Baud Rate Generator

bit 22-18 **Unimplemented:** Read as '0'

Note 1: This bit can only be written when the ON bit = 0. Refer to **Section 40.0 "Electrical Specifications"** for maximum clock frequency requirements.

2: This bit is not used in the Framed SPI mode. The user should program this bit to '0' for the Framed SPI mode (FRMEN = 1).

3: When AUDEN = 1, the SPI/I^2S module functions as if the CKP bit is equal to '1', regardless of the actual value of the CKP bit.

4: This bit present for legacy compatibility and is superseded by PPS functionality on these devices (see **Section 13.4 "Peripheral Pin Select (PPS)"** for more information).

REGISTER 21-1: SPIxCON: SPI CONTROL REGISTER (CONTINUED)

bit 17 **SPIFE:** Frame Sync Pulse Edge Select bit (Framed SPI mode only)
1 = Frame synchronization pulse coincides with the first bit clock
0 = Frame synchronization pulse precedes the first bit clock

bit 16 **ENHBUF:** Enhanced Buffer Enable bit(1)
1 = Enhanced Buffer mode is enabled
0 = Enhanced Buffer mode is disabled

bit 15 **ON:** SPI/I2S Module On bit
1 = SPI/I2S module is enabled
0 = SPI/I2S module is disabled

bit 14 **Unimplemented:** Read as '0'

bit 13 **SIDL:** Stop in Idle Mode bit
1 = Discontinue operation when CPU enters in Idle mode
0 = Continue operation in Idle mode

bit 12 **DISSDO:** Disable SDOx pin bit(4)
1 = SDOx pin is not used by the module. Pin is controlled by associated PORT register.
0 = SDOx pin is controlled by the module

bit 11-10 **MODE<32,16>:** 32/16-Bit Communication Select bits
When AUDEN = 1:

MODE32	MODE16	Communication
1	1	24-bit Data, 32-bit FIFO, 32-bit Channel/64-bit Frame
1	0	32-bit Data, 32-bit FIFO, 32-bit Channel/64-bit Frame
0	1	16-bit Data, 16-bit FIFO, 32-bit Channel/64-bit Frame
0	0	16-bit Data, 16-bit FIFO, 16-bit Channel/32-bit Frame

When AUDEN = 0:

MODE32	MODE16	Communication
1	x	32-bit
0	1	16-bit
0	0	8-bit

bit 9 **SMP:** SPI Data Input Sample Phase bit
Master mode (MSTEN = 1):
1 = Input data sampled at end of data output time
0 = Input data sampled at middle of data output time
Slave mode (MSTEN = 0):
SMP value is ignored when SPI is used in Slave mode. The module always uses SMP = 0.

bit 8 **CKE:** SPI Clock Edge Select bit(2)
1 = Serial output data changes on transition from active clock state to Idle clock state (see CKP bit)
0 = Serial output data changes on transition from Idle clock state to active clock state (see CKP bit)

bit 7 **SSEN:** Slave Select Enable (Slave mode) bit
1 = $\overline{SSx}$ pin is used for Slave mode
0 = $\overline{SSx}$ pin is not used for Slave mode, pin is controlled by the port function.

bit 6 **CKP:** Clock Polarity Select bit(3)
1 = Idle state for clock is a high level; active state is a low level
0 = Idle state for clock is a low level; active state is a high level

bit 5 **MSTEN:** Master Mode Enable bit
1 = Master mode
0 = Slave mode

Note 1: This bit can only be written when the ON bit = 0. Refer to **Section 40.0 "Electrical Specifications"** for maximum clock frequency requirements.

2: This bit is not used in the Framed SPI mode. The user should program this bit to '0' for the Framed SPI mode (FRMEN = 1).

3: When AUDEN = 1, the SPI/I2S module functions as if the CKP bit is equal to '1', regardless of the actual value of the CKP bit.

4: This bit present for legacy compatibility and is superseded by PPS functionality on these devices (see **Section 13.4 "Peripheral Pin Select (PPS)"** for more information).

 © 2020 Microchip Technology Inc.

REGISTER 21-1: SPIxCON: SPI CONTROL REGISTER (CONTINUED)

bit 4 **DISSDI:** Disable SDI bit(4)
- 1 = SDI pin is not used by the SPI module (pin is controlled by PORT function)
- 0 = SDI pin is controlled by the SPI module

bit 3-2 **STXISEL<1:0>:** SPI Transmit Buffer Empty Interrupt Mode bits
- 11 = Interrupt is generated when the buffer is not full (has one or more empty elements)
- 10 = Interrupt is generated when the buffer is empty by one-half or more
- 01 = Interrupt is generated when the buffer is completely empty
- 00 = Interrupt is generated when the last transfer is shifted out of SPISR and transmit operations are complete

bit 1-0 **SRXISEL<1:0>:** SPI Receive Buffer Full Interrupt Mode bits
- 11 = Interrupt is generated when the buffer is full
- 10 = Interrupt is generated when the buffer is full by one-half or more
- 01 = Interrupt is generated when the buffer is not empty
- 00 = Interrupt is generated when the last word in the receive buffer is read (in other words buffer is empty)

Note 1: This bit can only be written when the ON bit = 0. Refer to **Section 40.0 "Electrical Specifications"** for maximum clock frequency requirements.

2: This bit is not used in the Framed SPI mode. The user should program this bit to '0' for the Framed SPI mode (FRMEN = 1).

3: When AUDEN = 1, the SPI/I^2S module functions as if the CKP bit is equal to '1', regardless of the actual value of the CKP bit.

4: This bit present for legacy compatibility and is superseded by PPS functionality on these devices (see **Section 13.4 "Peripheral Pin Select (PPS)"** for more information).

REGISTER 21-2: SPIxCON2: SPI CONTROL REGISTER 2

Bit Range	Bit 31/23/15/7	Bit 30/22/14/6	Bit 29/21/13/5	Bit 28/20/12/4	Bit 27/19/11/3	Bit 26/18/10/2	Bit 25/17/9/1	Bit 24/16/8/0
31:24	U-0	U-0	U-0	U-0	U-0	U-0	U-0	U-0
	—	—	—	—	—	—	—	—
23:16	U-0	U-0	U-0	U-0	U-0	U-0	U-0	U-0
	—	—	—	—	—	—	—	—
15:8	R/W-0	U-0	U-0	R/W-0	R/W-0	R/W-0	R/W-0	R/W-0
	SPISGNEXT	—	—	FRMERREN	SPIROVEN	SPITUREN	IGNROV	IGNTUR
7:0	R/W-0	U-0	U-0	U-0	R/W-0	U-0	R/W-0	R/W-0
	AUDEN(1)	—	—	—	AUDMONO(1,2)	—	AUDMOD<1:0>(1,2)	

Legend:			
R = Readable bit	W = Writable bit	U = Unimplemented bit, read as '0'	
-n = Value at POR	'1' = Bit is set	'0' = Bit is cleared	x = Bit is unknown

bit 31-16 **Unimplemented:** Read as '0'

bit 15 **SPISGNEXT:** Sign Extend Read Data from the RX FIFO bit
- 1 = Data from RX FIFO is sign extended
- 0 = Data from RX FIFO is not sign extended

bit 14-13 **Unimplemented:** Read as '0'

bit 12 **FRMERREN:** Enable Interrupt Events via FRMERR bit
- 1 = Frame error overflow generates error events
- 0 = Frame error does not generate error events

bit 11 **SPIROVEN:** Enable Interrupt Events via SPIROV bit
- 1 = Receive overflow generates error events
- 0 = Receive overflow does not generate error events

bit 10 **SPITUREN:** Enable Interrupt Events via SPITUR bit
- 1 = Transmit underrun generates error events
- 0 = Transmit underrun does not generates error events

bit 9 **IGNROV:** Ignore Receive Overflow bit (for audio data transmissions)
- 1 = A ROV is not a critical error; during ROV data in the FIFO is not overwritten by receive data
- 0 = A ROV is a critical error which stop SPI operation

bit 8 **IGNTUR:** Ignore Transmit Underrun bit (for audio data transmissions)
- 1 = A TUR is not a critical error and zeros are transmitted until the SPIxTXB is not empty
- 0 = A TUR is a critical error which stop SPI operation

bit 7 **AUDEN:** Enable Audio CODEC Support bit(1)
- 1 = Audio protocol is enabled
- 0 = Audio protocol is disabled

bit 6-5 **Unimplemented:** Read as '0'

bit 3 **AUDMONO:** Transmit Audio Data Format bit(1,2)
- 1 = Audio data is mono (each data word is transmitted on both left and right channels)
- 0 = Audio data is stereo

bit 2 **Unimplemented:** Read as '0'

bit 1-0 **AUDMOD<1:0>:** Audio Protocol Mode bit(1,2)
- 11 = PCM/DSP mode
- 10 = Right Justified mode
- 01 = Left Justified mode
- 00 = I^2S mode

Note 1: This bit can only be written when the ON bit = 0.

2: This bit is only valid for AUDEN = 1.

 © 2020 Microchip Technology Inc.

REGISTER 21-3: SPIxSTAT: SPI STATUS REGISTER

Bit Range	Bit 31/23/15/7	Bit 30/22/14/6	Bit 29/21/13/5	Bit 28/20/12/4	Bit 27/19/11/3	Bit 26/18/10/2	Bit 25/17/9/1	Bit 24/16/8/0
31:24	U-0	U-0	U-0	R-0	R-0	R-0	R-0	R-0
	—	—	—	RXBUFELM<4:0>				
23:16	U-0	U-0	U-0	R-0	R-0	R-0	R-0	R-0
	—	—	—	TXBUFELM<4:0>				
15:8	U-0	U-0	U-0	R/C-0, HS	R-0	U-0	U-0	R-0
	—	—	—	FRMERR	SPIBUSY	—	—	SPITUR
7:0	R-0	R/W-0	R-0	U-0	R-1	U-0	R-0	R-0
	SRMT	SPIROV	SPIRBE	—	SPITBE	—	SPITBF	SPIRBF

Legend:	C = Clearable bit	HS = Set in hardware	
R = Readable bit	W = Writable bit	U = Unimplemented bit, read as '0'	
-n = Value at POR	'1' = Bit is set	'0' = Bit is cleared	x = Bit is unknown

bit 31-29 **Unimplemented:** Read as '0'

bit 28-24 **RXBUFELM<4:0>:** Receive Buffer Element Count bits (valid only when ENHBUF = 1)

bit 23-21 **Unimplemented:** Read as '0'

bit 20-16 **TXBUFELM<4:0>:** Transmit Buffer Element Count bits (valid only when ENHBUF = 1)

bit 15-13 **Unimplemented:** Read as '0'

bit 12 **FRMERR:** SPI Frame Error status bit
1 = Frame error is detected
0 = No Frame error is detected
This bit is only valid when FRMEN = 1.

bit 11 **SPIBUSY:** SPI Activity Status bit
1 = SPI peripheral is currently busy with some transactions
0 = SPI peripheral is currently idle

bit 10-9 **Unimplemented:** Read as '0'

bit 8 **SPITUR:** Transmit Under Run bit
1 = Transmit buffer has encountered an Underrun condition
0 = Transmit buffer has no Underrun condition
This bit is only valid in Framed Sync mode; the Underrun condition must be cleared by disabling/re-enabling the module.

bit 7 **SRMT:** Shift Register Empty bit (valid only when ENHBUF = 1)
1 = When SPI module shift register is empty
0 = When SPI module shift register is not empty

bit 6 **SPIROV:** Receive Overflow Flag bit
1 = A new data is completely received and discarded. The user software has not read the previous data in the SPIxBUF register.
0 = No overflow has occurred
This bit is set in hardware; can only be cleared (= 0) in software.

bit 5 **SPIRBE:** RX FIFO Empty bit (valid only when ENHBUF = 1)
1 = RX FIFO is empty (CRPTR = SWPTR)
0 = RX FIFO is not empty (CRPTR ≠ SWPTR)

bit 4 **Unimplemented:** Read as '0'

REGISTER 21-3: SPIxSTAT: SPI STATUS REGISTER (CONTINUED)

bit 3 **SPITBE:** SPI Transmit Buffer Empty Status bit
1 = Transmit buffer, SPIxTXB is empty
0 = Transmit buffer, SPIxTXB is not empty
Automatically set in hardware when SPI transfers data from SPIxTXB to SPIxSR.
Automatically cleared in hardware when SPIxBUF is written to, loading SPIxTXB.

bit 2 **Unimplemented:** Read as '0'

bit 1 **SPITBF:** SPI Transmit Buffer Full Status bit
1 = Transmit is not yet started, SPITXB is full
0 = Transmit buffer is not full
Standard Buffer mode:
Automatically set in hardware when the core writes to the SPIBUF location, loading SPITXB.
Automatically cleared in hardware when the SPI module transfers data from SPITXB to SPISR.
Enhanced Buffer mode:
Set when CWPTR + 1 = SRPTR; cleared otherwise

bit 0 **SPIRBF:** SPI Receive Buffer Full Status bit
1 = Receive buffer, SPIxRXB is full
0 = Receive buffer, SPIxRXB is not full
Standard Buffer mode:
Automatically set in hardware when the SPI module transfers data from SPIxSR to SPIxRXB.
Automatically cleared in hardware when SPIxBUF is read from, reading SPIxRXB.
Enhanced Buffer mode:
Set when SWPTR + 1 = CRPTR; cleared otherwise

 © 2020 Microchip Technology Inc.

 © 2020 Microchip Technology Inc.

22.0 SERIAL QUAD INTERFACE (SQI)

Note: This data sheet summarizes the features of the PIC32MZ W1 device. It is not intended to be a comprehensive reference source. To complement the information in this data sheet, refer to **Section 46. "Serial Quad Interface (SQI)"** (DS60001244) in the *"PIC32 Family Reference Manual"*, which is available from the Microchip web site (www.microchip.com/PIC32).

The SQI module is a synchronous serial interface that provides access to serial Flash memories and other serial devices. The SQI module supports Single Lane (identical to SPI), Dual Lane, and Quad Lane modes.

The following are key features of the SQI module:

- Supports Single, Dual, and Quad Lane modes
- Supports Single Data Rate (SDR) mode
- Programmable command sequence
- Does not support Execute-in-Place (XIP) over SQI interface
- Data transfer:
  - Programmed I/O mode (PIO)
  - Buffer descriptor DMA
- Supports SPI Mode 0 and Mode 3
- Programmable Clock Polarity (CPOL) and Clock Phase (CPHA) bits
- Supports up to two chip selects
- Supports up to four bytes of Flash address
- Programmable interrupt thresholds
- 32-byte transmit data buffer
- 32-byte receive data buffer
- 4-word controller buffer

FIGURE 22-1: SQI MODULE BLOCK DIAGRAM

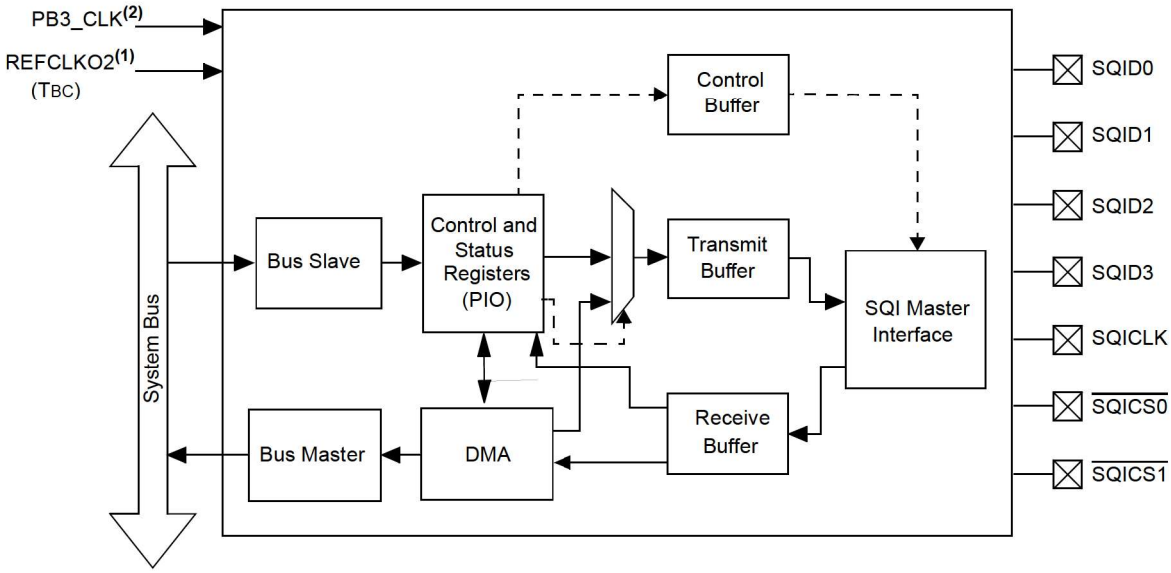

Note 1: When configuring the REFCLKO2 clock source, a value of '0' for the ROTRIM<8:0> bits must be selected.
2: This clock source is only used for SQI Special Function Register (SFR) access.

22.1 SQI Control Registers

TABLE 22-1: SERIAL QUADRATURE INTERFACE (SQI) REGISTER MAP

Virtual Address (BF8E_#)	Register Name	Bit Range	Bits																All Resets
			31/15	30/14	29/13	28/12	27/11	26/10	25/9	24/8	23/7	22/6	21/5	20/4	19/3	18/2	17/1	16/0	
1008	SQI1CFG	31:16	—	—	—	—	—	—	CSEN<1:0>		SQIEN	—	DATAEN<1:0>		CONBU-FRST	RXBU-FRST	TXBU-FRST	RESET	0000
		15:0	—	—	—	BURSTEN	—	HOLD	WP	—	—	—	LSBF	CPOL	CPHA	MODE<2:0>			0000
100C	SQI1CON	31:16	—	—	—	—	—	—	—	SCHECK	—	DASSERT	DEVSEL<1:0>		LANEMODE<1:0>		CMDINIT<1:0>		0000
		15:0	TXRXCOUNT<15:0>																0000
1010	SQI1 CLKCON	31:16	—	—	—	—	—	—	—	—	—	—	—	—	—	CLKDIV<10:8>			0000
		15:0	CLKDIV<7:0>								—	—	—	—	—	—	STABLE	EN	0000
1014	SQI1 CMDTHR	31:16	—	—	—	—	—	—	—	—	—	—	—	—	—	—	—	—	0000
		15:0	TXCMDTHR<7:0>								RXCMDTHR<7:0>								0000
1018	SQI1 INTTHR	31:16	—	—	—	—	—	—	—	—	—	—	—	—	—	—	—	—	0000
		15:0	TXINTTHR<7:0>								RXINTTHR<7:0>								0000
101C	SQI1 INTEN	31:16	—	—	—	—	—	—	—	—	—	—	—	—	—	—	—	—	0000
		15:0	—	—	—	—	DMAEIE	PKT COMPIE	BD DONEIE	CON THRIE	CON EMPTYIE	CON FULLIE	RX THRIE	RX FULLIE	RX EMPTYIE	TX THRIE	TX FULLIE	TX EMPTYIE	0000
1020	SQI1 INTSTAT	31:16	—	—	—	—	—	—	—	—	—	—	—	—	—	—	—	—	0000
		15:0	—	—	—	—	DMAEIF	PKT COMPIF	BD DONEIF	CON THRIF	CON EMPTYIF	CON FULLIF	RX THRIF	RX FULLIF	RX EMPTYIF	TX THRIF	TX FULLIF	TX EMPTYIF	0000
1024	SQI1 TXDATA	31:16	TXDATA<31:16>																0000
		15:0	TXDATA<15:0>																0000
1028	SQI1 RXDATA	31:16	RXDATA<31:16>																0000
		15:0	RXDATA<15:0>																0000
102C	SQI1 STAT1	31:16	—	—	—	—	—	—	—	—	—	—	TXFIFOFREE<7:0>						0000
		15:0	—	—	—	—	—	—	—	—	—	—	RXFIFOCNT<7:0>						0000
1030	SQI1 STAT2	31:16	—	—	—	—	—	—	—	—	—	—	—	—	—	—	CMDSTAT<1:0>		0000
		15:0	—	—	—	—	CONAVAIL<4:0>					SDID3	SDID2	SDID1	SDID0	—	RXUN	TXOV	00x0
1034	SQI1 BDCON	31:16	—	—	—	—	—	—	—	—	—	—	—	—	—	—	—	—	0000
		15:0	—	—	—	—	—	—	—	—	—	—	—	—	—	START	POLLEN	DMAEN	0000
1038	SQI1BD CURADD	31:16	BDCURRADDR<31:16>																0000
		15:0	BDCURRADDR<15:0>																0000
1040	SQI1BD BASEADD	31:16	BDADDR<31:16>																0000
		15:0	BDADDR<15:0>																0000
1044	SQI1BD STAT	31:16	—	—	—	—	—	—	—	—	—	—	BDSTATE<3:0>				DMA START	DMAACTV	0000
		15:0	BDCON<15:0>																0000
1048	SQI1BD POLLCON	31:16	—	—	—	—	—	—	—	—	—	—	—	—	—	—	—	—	0000
		15:0	POLLCON<15:0>																0000

© 2020 Microchip Technology Inc.

TABLE 22-1: SERIAL QUADRATURE INTERFACE (SQI) REGISTER MAP (CONTINUED)

Virtual Address (BF8E_#)	Register Name	Bit Range	Bits																All Resets
			31/15	30/14	29/13	28/12	27/11	26/10	25/9	24/8	23/7	22/6	21/5	20/4	19/3	18/2	17/1	16/0	
104C	SQI1BD TXDSTAT	31:16	—	—	—	TXSTATE<3:0>				—	—	—	—	TXBUFCNT<4:0>					0000
		15:0	—	—	—	—	—	—	—	—	TXCURBUFLEN<7:0>								0000
1050	SQI1BD RXDSTAT	31:16	—	—	—	RXSTATE<3:0>				—	—	—	—	RXBUFCNT<4:0>					0000
		15:0	—	—	—	—	—	—	—	—	RXCURBUFLEN<7:0>								0000
1054	SQI1THR	31:16	—	—	—	—	—	—	—	—	—	—	—	—	—	—	—	—	0000
		15:0	—	—	—	—	—	—	—	—	—	—	—	THRES<4:0>					0000
1058	SQI1INT SIGEN	31:16	—	—	—	—	—	—	—	—	—	—	—	—	—	—	—	—	0000
		15:0	—	—	—	—	DMAEISE	PKT DONEISE	BD DONEISE	CON THRISE	CON EMPTYISE	CON FULLISE	RX THRISE	RX FULLISE	RX EMPTYISE	TX THRISE	TX FULLISE	TX EMPTYISE	0000
105C	SQI1 TAPCON	31:16	—	—	—	—	—	—	—	—	—	—	—	—	—	—	—	—	0000
		15:0	—	—	CLKINDLY<5:0>						DATAOUTDLY<3:0>				CLKOUTDLY<3:0>				0000
1060	SQI1 MEMSTAT	31:16	—	—	—	—	—	—	—	—	—	—	—	STATPOS	TYPESTAT<1:0>		STATBYTES<1:0>		0000
		15:0	STATDATA<15:0>																0000

REGISTER 22-1: SQI1CFG: SQI CONFIGURATION REGISTER

Bit Range	Bit 31/23/15/7	Bit 30/22/14/6	Bit 29/21/13/5	Bit 28/20/12/4	Bit 27/19/11/3	Bit 26/18/10/2	Bit 25/17/9/1	Bit 24/16/8/0
31:24	U-0	U-0	U-0	U-0	U-0	U-0	R/W-0	R/W-0
	—	—	—	—	—	—	CSEN<1:0>	
23:16	R/W-0	U-0	R/W-0	R/W-0	R/W-0, HC	R/W-0, HC	R/W-0, HC	R/W-0, HC
	SQIEN	—	DATAEN<1:0>		CONBUFRST	RXBUFRST	TXBUFRST	RESET
15:8	U-0	r-0	r-0	R/W-0	r-0	R/W-0	R/W-0	U-0
	—	—	—	BURSTEN(1)	—	HOLD	WP	—
7:0	U-0	U-0	R/W-0	R/W-0	R/W-0	R/W-0	R/W-0	R/W-0
	—	—	LSBF	CPOL	CPHA	MODE<2:0>		

Legend:	HC = Hardware Cleared	r = Reserved	
R = Readable bit	W = Writable bit	U = Unimplemented bit, read as '0'	
-n = Value at POR	'1' = Bit is set	'0' = Bit is cleared	x = Bit is unknown

bit 31-26 **Unimplemented:** Read as '0'

bit 25-24 **CSEN<1:0>:** Chip Select Output Enable bits
- 11 = Chip Select 0 and Chip Select 1 are used
- 10 = Chip Select 1 is used (Chip Select 0 is not used)
- 01 = Chip Select 0 is used (Chip Select 1 is not used)
- 00 = Chip Select 0 and Chip Select 1 are not used

bit 23 **SQIEN:** SQI Enable bit
- 1 = SQI module is enabled
- 0 = SQI module is disabled

bit 22 **Unimplemented:** Read as '0'

bit 21-20 **DATAEN<1:0>:** Data Output Enable bits
- 11 = Reserved
- 10 = SQID3-SQID0 outputs are enabled
- 01 = SQID1 and SQID0 data outputs are enabled
- 00 = SQID0 data output is enabled

bit 19 **CONFIFORST:** Control FIFO Reset bit
- 1 = A reset pulse is generated clearing the control FIFO
- 0 = A reset pulse is not generated

bit 18 **RXFIFORST:** Receive FIFO Reset bit
- 1 = A reset pulse is generated clearing the receive FIFO
- 0 = A reset pulse is not generated

bit 17 **TXFIFORST:** Transmit FIFO Reset bit
- 1 = A reset pulse is generated clearing the transmit FIFO
- 0 = A reset pulse is not generated

bit 16 **RESET:** Software Reset Select bit

This bit is automatically cleared by the SQI module. All of the internal state machines and FIFO pointers are reset by this reset pulse.
- 1 = A reset pulse is generated
- 0 = A reset pulse is not generated

bit 15 **Unimplemented:** Read as '0'

bit 14-13 **Reserved:** Must be programmed as '0'

Note 1: This bit must be programmed as '1'.

 © 2020 Microchip Technology Inc.

REGISTER 22-1: SQI1CFG: SQI CONFIGURATION REGISTER (CONTINUED)

bit 12 **BURSTEN:** Burst Configuration bit(1)
1 = Burst is enabled
0 = Burst is not enabled

bit 11 **Reserved:** Must be programmed as '0'

bit 10 **HOLD:** Hold bit
In Single Lane or Dual Lane mode, this bit is used to drive the SQID3 pin, which can be used for devices with a HOLD input pin. The meaning of the values for this bit will depend on the device to which SQID3 is connected.

bit 9 **WP:** Write Protect bit
In Single Lane or Dual Lane mode, this bit is used to drive the SQID2 pin, which can be used with devices with a write-protect pin. The meaning of the values for this bit will depend on the device to which SQID2 is connected.

bit 8-6 **Unimplemented:** Read as '0'

bit 5 **LSBF:** Data Format Select bit
1 = LSB is sent or received first
0 = MSB is sent or received first

bit 4 **CPOL:** Clock Polarity Select bit
1 = Active-low SQICLK (SQICLK high is the Idle state)
0 = Active-high SQICLK (SQICLK low is the Idle state)

bit 3 **CPHA:** Clock Phase Select bit
1 = SQICLK starts toggling at the start of the first data bit
0 = SQICLK starts toggling at the middle of the first data bit

bit 2-0 **MODE<2:0>:** Mode Select bits
111 = Reserved
•
•
•
100 = Reserved
011 = Reserved
010 = DMA mode is selected
001 = CPU mode is selected (the module is controlled by the CPU in PIO mode.
000 = Reserved

Note 1: This bit must be programmed as '1'.

REGISTER 22-2: SQI1CON: SQI CONTROL REGISTER

Bit Range	Bit 31/23/15/7	Bit 30/22/14/6	Bit 29/21/13/5	Bit 28/20/12/4	Bit 27/19/11/3	Bit 26/18/10/2	Bit 25/17/9/1	Bit 24/16/8/0
31:24	U-0	U-0	U-0	U-0	U-0	U-0	r-0	R/W-0
	—	—	—	—	—	—	—	SCHECK
23:16	U-0	R/W-0	R/W-0	R/W-0	R/W-0	R/W-0	R/W-0	R/W-0
	—	DASSERT	DEVSEL<1:0>		LANEMODE<1:0>		CMDINIT<1:0>	
15:8	R/W-0	R/W-0	R/W-0	R/W-0	R/W-0	R/W-0	R/W-0	R/W-0
	TXRXCOUNT<15:8>							
7:0	R/W-0	R/W-0	R/W-0	R/W-0	R/W-0	R/W-0	R/W-0	R/W-0
	TXRXCOUNT<7:0>							

Legend:	r = Reserved		
R = Readable bit	W = Writable bit	U = Unimplemented bit, read as '0'	
-n = Value at POR	'1' = Bit is set	'0' = Bit is cleared	x = Bit is unknown

bit 31-26 **Unimplemented:** Read as '0'

bit 25 **Reserved:** Must be programmed as '0'

bit 24 **SCHECK:** Flash Status Check bit
1 = Check the status of the Flash
0 = Do not check the status of the Flash

bit 23 **Unimplemented:** Read as '0'

bit 22 **DASSERT:** Chip Select Assert bit
1 = Chip Select is deasserted after transmission or reception of the specified number of bytes
0 = Chip Select is not deasserted after transmission or reception of the specified number of bytes

bit 21-20 **DEVSEL<1:0>:** SQI Device Select bits
11 = Reserved
10 = Reserved
01 = Select Device 1
00 = Select Device 0

bit 19-18 **LANEMODE<1:0>:** SQI Lane Mode Select bits
11 = Reserved
10 = Quad Lane mode
01 = Dual Lane mode
00 = Single Lane mode

bit 17-16 **CMDINIT<1:0>:** Command Initiation Mode Select bits
If it is Transmit, commands are initiated based on a write to the transmit register or the contents of TX FIFO. If CMDINIT is Receive, commands are initiated based on reads to the read register or RX FIFO availability.
11 = Reserved
10 = Receive
01 = Transmit
00 = Idle

bit 15-0 **TXRXCOUNT<15:0>:** Transmit/Receive Count bits
These bits specify the total number of bytes to transmit or receive (based on CMDINIT).

 © 2020 Microchip Technology Inc.

REGISTER 22-3: SQI1CLKCON: SQI CLOCK CONTROL REGISTER

Bit Range	Bit 31/23/15/7	Bit 30/22/14/6	Bit 29/21/13/5	Bit 28/20/12/4	Bit 27/19/11/3	Bit 26/18/10/2	Bit 25/17/9/1	Bit 24/16/8/0
31:24	U-0	U-0	U-0	U-0	U-0	U-0	U-0	U-0
	—	—	—	—	—	—	—	—
23:16	U-0	U-0	U-0	U-0	U-0	R/W-0	R/W-0	R/W-0
	—	—	—	—	—	CLKDIV<10:8>(1)		
15:8	R/W-0	R/W-0	R/W-0	R/W-0	R/W-0	R/W-0	R/W-0	R/W-0
	CLKDIV<7:0>(1)							
7:0	U-0	U-0	U-0	U-0	U-0	U-0	R-0	R/W-0
	—	—	—	—	—	—	STABLE	EN

Legend:			
R = Readable bit	W = Writable bit	U = Unimplemented bit, read as '0'	
-n = Value at POR	'1' = Bit is set	'0' = Bit is cleared	x = Bit is unknown

bit 31-19 **Unimplemented:** Read as '0'

bit 18-8 **CLKDIV<10:0>:** SQI Clock TSQI Frequency Select bit(1)

10000000000 = Base clock TBC is divided by 2048
01000000000 = Base clock TBC is divided by 1024
00100000000 = Base clock TBC is divided by 512
00010000000 = Base clock TBC is divided by 256
00001000000 = Base clock TBC is divided by 128
00000100000 = Base clock TBC is divided by 64
00000010000 = Base clock TBC is divided by 32
00000001000 = Base clock TBC is divided by 16
00000000100 = Base clock TBC is divided by 8
00000000010 = Base clock TBC is divided by 4
00000000001 = Base clock TBC is divided by 2
00000000000 = Base clock TBC

Setting these bits to '00000000000' specifies the highest frequency of the SQI clock.

bit 7-2 **Unimplemented:** Read as '0'

bit 1 **STABLE:** TSQI Clock Stable Select bit

This bit is set to '1' when the SQI clock, TSQI, is stable after writing a '1' to the EN bit.
1 = TSQI clock is stable
0 = TSQI clock is not stable

bit 0 **EN:** TSQI Clock Enable Select bit

When clock oscillation is stable, the SQI module will set the STABLE bit to '1'.
1 = Enable the SQI clock (TSQI) (when clock oscillation is stable, the SQI module sets the STABLE bit to '1')
0 = Disable the SQI clock (TSQI) (the SQI module should stop its clock to enter a low power state); SFRs can still be accessed, as they use PB3_CLK

Note 1: Refer to **40.0 "Electrical Specifications"** for the maximum clock frequency specifications.

REGISTER 22-4: SQI1CMDTHR: SQI COMMAND THRESHOLD REGISTER

Bit Range	Bit 31/23/15/7	Bit 30/22/14/6	Bit 29/21/13/5	Bit 28/20/12/4	Bit 27/19/11/3	Bit 26/18/10/2	Bit 25/17/9/1	Bit 24/16/8/0
31:24	U-0	U-0	U-0	U-0	U-0	U-0	U-0	U-0
	—	—	—	—	—	—	—	—
23:16	U-0	U-0	U-0	U-0	U-0	U-0	U-0	U-0
	—	—	—	—	—	—	—	—
15:8	U-0	U-0	U-0	R/W-0	R/W-0	R/W-0	R/W-0	R/W-0
	TXCMDTHR<7:0>							
7:0	U-0	U-0	U-0	R/W-0	R/W-0	R/W-0	R/W-0	R/W-0
	RXCMDTHR<7:0>(1)							

Legend:			
R = Readable bit	W = Writable bit	U = Unimplemented bit, read as '0'	
-n = Value at POR	'1' = Bit is set	'0' = Bit is cleared	x = Bit is unknown

bit 31-13 **Unimplemented:** Read as '0'

bit 15-8 **TXCMDTHR<7:0>:** Transmit Command Threshold bits

In transmit initiation mode, the SQI module performs a transmit operation when transmit command threshold bytes are present in the TX FIFO. These bits should usually be set to '1' for normal Flash commands, and set to a higher value for page programming. For 16-bit mode, the value should be a multiple of 2.

bit 7-0 **RXCMDTHR<7:0>:** Receive Command Threshold bits(1)

In receive initiation mode, the SQI module attempts to perform receive operations to fetch the receive command threshold number of bytes in the receive buffer. If space for these bytes is not present in the FIFO, the SQI will not initiate a transfer. For 16-bit mode, the value should be a multiple of 2.

If software performs any reads, thereby reducing the FIFO count, hardware would initiate a receive transfer to make the FIFO count equal to the value in these bits. If software would not like any more words latched into the FIFO, command initiation mode needs to be changed to Idle before any FIFO reads by software.

Note 1: These bits should only be programmed when a receive is not active (i.e., during Idle mode or a transmit).

 © 2020 Microchip Technology Inc.

REGISTER 22-5: SQI1INTTHR: SQI INTERRUPT THRESHOLD REGISTER

Bit Range	Bit 31/23/15/7	Bit 30/22/14/6	Bit 29/21/13/5	Bit 28/20/12/4	Bit 27/19/11/3	Bit 26/18/10/2	Bit 25/17/9/1	Bit 24/16/8/0
31:24	U-0	U-0	U-0	U-0	U-0	U-0	U-0	U-0
	—	—	—	—	—	—	—	—
23:16	U-0	U-0	U-0	U-0	U-0	U-0	U-0	U-0
	—	—	—	—	—	—	—	—
15:8	U-0	U-0	U-0	R/W-0	R/W-0	R/W-0	R/W-0	R/W-0
	TXINTTHR<7:0>							
7:0	U-0	U-0	U-0	R/W-0	R/W-0	R/W-0	R/W-0	R/W-0
	RXINTTHR<7:0>							

Legend:			
R = Readable bit	W = Writable bit	U = Unimplemented bit, read as '0'	
-n = Value at POR	'1' = Bit is set	'0' = Bit is cleared	x = Bit is unknown

bit 31-13 **Unimplemented:** Read as '0'

bit 15-8 **TXINTTHR<7:0>:** Transmit Interrupt Threshold bits

A transmit interrupt is set when the transmit FIFO has more space than the set number of bytes. For 16-bit mode, the value should be a multiple of 2.

bit 7-0 **RXINTTHR<7:0>:** Receive Interrupt Threshold bits

A receive interrupt is set when the receive FIFO count is larger than or equal to the set number of bytes. For 16-bit mode, the value should be multiple of 2.

REGISTER 22-6: SQI1INTEN: SQI INTERRUPT ENABLE REGISTER

Bit Range	Bit 31/23/15/7	Bit 30/22/14/6	Bit 29/21/13/5	Bit 28/20/12/4	Bit 27/19/11/3	Bit 26/18/10/2	Bit 25/17/9/1	Bit 24/16/8/0
31:24	U-0	U-0	U-0	U-0	U-0	U-0	U-0	U-0
	—	—	—	—	—	—	—	—
23:16	U-0	U-0	U-0	U-0	U-0	U-0	U-0	U-0
	—	—	—	—	—	—	—	—
15:8	U-0	U-0	U-0	U-0	R/W-0	R/W-0	R/W-0	R/W-0
	—	—	—	—	DMAEIE	PKTCOMPIE	BDDONEIE	CONTHRIE
7:0	R/W-0	R/W-0	R/W-0	R/W-0	R/W-0	R/W-0	R/W-0	R/W-0
	CONEMPTYIE	CONFULLIE	RXTHRIE	RXFULLIE	RXEMPTYIE	TXTHRIE	TXFULLIE	TXEMPTYIE

Legend:	HS = Hardware Set		
R = Readable bit	W = Writable bit	U = Unimplemented bit, read as '0'	
-n = Value at POR	'1' = Bit is set	'0' = Bit is cleared	x = Bit is unknown

bit 31-12 **Unimplemented:** Read as '0'

bit 11 **DMAEIE:** DMA Bus Error Interrupt Enable bit
1 = Interrupt is enabled
0 = Interrupt is disabled

bit 10 **PKTCOMPIE:** DMA Buffer Descriptor Packet Complete Interrupt Enable bit
1 = Interrupt is enabled
0 = Interrupt is disabled

bit 9 **BDDONEIE:** DMA Buffer Descriptor Done Interrupt Enable bit
1 = Interrupt is enabled
0 = Interrupt is disabled

bit 8 **CONTHRIE:** Control Buffer Threshold Interrupt Enable bit
1 = Interrupt is enabled
0 = Interrupt is disabled

bit 7 **CONEMPTYIE:** Control Buffer Empty Interrupt Enable bit
1 = Interrupt is enabled
0 = Interrupt is disabled

bit 6 **CONFULLIE:** Control Buffer Full Interrupt Enable bit
This bit enables an interrupt when the receive FIFO buffer is full.
1 = Interrupt is enabled
0 = Interrupt is disabled

bit 5 **RXTHRIE:** Receive Buffer Threshold Interrupt Enable bit
1 = Interrupt is enabled
0 = Interrupt is disabled

bit 4 **RXFULLIE:** Receive Buffer Full Interrupt Enable bit
1 = Interrupt is enabled
0 = Interrupt is disabled

bit 3 **RXEMPTYIE:** Receive Buffer Empty Interrupt Enable bit
1 = Interrupt is enabled
0 = Interrupt is disabled

bit 2 **TXTHRIE:** Transmit Threshold Interrupt Enable bit
1 = Interrupt is enabled
0 = Interrupt is disabled

bit 1 **TXFULLIE:** Transmit Buffer Full Interrupt Enable bit
1 = Interrupt is enabled
0 = Interrupt is disabled

bit 0 **TXEMPTYIE:** Transmit Buffer Empty Interrupt Enable bit
1 = Interrupt is enabled
0 = Interrupt is disabled

 © 2020 Microchip Technology Inc.

REGISTER 22-7: SQI1INTSTAT: SQI INTERRUPT STATUS REGISTER

Bit Range	Bit 31/23/15/7	Bit 30/22/14/6	Bit 29/21/13/5	Bit 28/20/12/4	Bit 27/19/11/3	Bit 26/18/10/2	Bit 25/17/9/1	Bit 24/16/8/0
31:24	U-0	U-0	U-0	U-0	U-0	U-0	U-0	U-0
	—	—	—	—	—	—	—	—
23:16	U-0	U-0	U-0	U-0	U-0	U-0	U-0	U-0
	—	—	—	—	—	—	—	—
15:8	U-0	U-0	U-0	U-0	R/W-0, HS	R/W-0, HS	R/W-0, HS	R/W-0, HS
	—	—	—	—	DMA EIF	PKT COMPIF	BD DONEIF	CON THRIF
7:0	R/W-1, HS	R/W-0, HS	R/W-1, HS	R/W-0, HS	R/W-1, HS	R/W-1, HS	R/W-0, HS	R/W-1, HS
	CONEMPTYIF	CONFULLIF	RXTHRIF(1)	RXFULLIF	RXEMPTYIF	TXTHRIF	TXFULLIF	TXEMPTYIF

Legend:	HS = Hardware Set		
R = Readable bit	W = Writable bit	U = Unimplemented bit, read as '0'	
-n = Value at POR	'1' = Bit is set	'0' = Bit is cleared	x = Bit is unknown

bit 31-12 **Unimplemented:** Read as '0'

bit 11 **DMAEIF:** DMA Bus Error Interrupt Flag bit
1 = DMA bus error has occurred
0 = DMA bus error has not occurred

bit 10 **PKTCOMPIF:** DMA Buffer Descriptor Processor Packet Completion Interrupt Flag bit
1 = DMA BD packet is complete
0 = DMA BD packet is in progress

bit 9 **BDDONEIF:** DMA Buffer Descriptor Done Interrupt Flag bit
1 = DMA BD process is done
0 = DMA BD process is in progress

bit 8 **CONTHRIF:** Control Buffer Threshold Interrupt Flag bit
1 = The control buffer has more than THRES words of space available
0 = The control buffer has less than THRES words of space available

bit 7 **CONEMPTYIF:** Control Buffer Empty Interrupt Flag bit
1 = Control buffer is empty
0 = Control buffer is not empty

bit 6 **CONFULLIF:** Control Buffer Full Interrupt Flag bit
1 = Control buffer is full
0 = Control buffer is not full

bit 5 **RXTHRIF:** Receive Buffer Threshold Interrupt Flag bit(1)
1 = Receive buffer has more than RXINTTHR words of space available
0 = Receive buffer has less than RXINTTHR words of space available

bit 4 **RXFULLIF:** Receive Buffer Full Interrupt Flag bit
1 = Receive buffer is full
0 = Receive buffer is not full

bit 3 **RXEMPTYIF:** Receive Buffer Empty Interrupt Flag bit
1 = Receive buffer is empty
0 = Receive buffer is not empty

Note 1: This bit will be set to a '1', immediately after a POR until a read request on the System Bus is received.
2: The bits in the register are cleared by writing a '1' to the corresponding bit position.

REGISTER 22-7: SQI1INTSTAT: SQI INTERRUPT STATUS REGISTER (CONTINUED)

bit 2 **TXTHRIF:** Transmit Buffer Threshold Interrupt Flag bit
1 = Transmit buffer has more than TXINTTHR words of space available
0 = Transmit buffer has less than TXINTTHR words of space available

bit 1 **TXFULLIF:** Transmit Buffer Full Interrupt Flag bit
1 = The transmit buffer is full
0 = The transmit buffer is not full

bit 0 **TXEMPTYIF:** Transmit Buffer Empty Interrupt Flag bit
1 = The transmit buffer is empty
0 = The transmit buffer has content

Note 1: This bit will be set to a '1', immediately after a POR until a read request on the System Bus is received.
2: The bits in the register are cleared by writing a '1' to the corresponding bit position.

 © 2020 Microchip Technology Inc.

REGISTER 22-8: SQI1TXDATA: SQI TRANSMIT DATA BUFFER REGISTER

Bit Range	Bit 31/23/15/7	Bit 30/22/14/6	Bit 29/21/13/5	Bit 28/20/12/4	Bit 27/19/11/3	Bit 26/18/10/2	Bit 25/17/9/1	Bit 24/16/8/0
31:24	R/W-0	R/W-0	R/W-0	R/W-0	R/W-0	R/W-0	R/W-0	R/W-0
	TXDATA<31:24>							
23:16	R/W-0	R/W-0	R/W-0	R/W-0	R/W-0	R/W-0	R/W-0	R/W-0
	TXDATA<23:16>							
15:8	R/W-0	R/W-0	R/W-0	R/W-0	R/W-0	R/W-0	R/W-0	R/W-0
	TXDATA<15:8>							
7:0	R/W-0	R/W-0	R/W-0	R/W-0	R/W-0	R/W-0	R/W-0	R/W-0
	TXDATA<7:0>							

Legend:			
R = Readable bit	W = Writable bit	U = Unimplemented bit, read as '0'	
-n = Value at POR	'1' = Bit is set	'0' = Bit is cleared	x = Bit is unknown

bit 31-0 **TXDATA<31:0>:** Transmit Command Data bits

Data is loaded into this register before being transmitted. Prior to the data transfer, the data in TXDATA is loaded into the shift register (SFDR).

Multiple writes to TXDATA can occur while a transfer is in progress. There can be a maximum of eight commands that can be queued.

REGISTER 22-9: SQI1RXDATA: SQI RECEIVE DATA BUFFER REGISTER

Bit Range	Bit 31/23/15/7	Bit 30/22/14/6	Bit 29/21/13/5	Bit 28/20/12/4	Bit 27/19/11/3	Bit 26/18/10/2	Bit 25/17/9/1	Bit 24/16/8/0
31:24	R-0	R-0	R-0	R-0	R-0	R-0	R-0	R-0
	RXDATA<31:24>							
23:16	R-0	R-0	R-0	R-0	R-0	R-0	R-0	R-0
	RXDATA<23:16>							
15:8	R-0	R-0	R-0	R-0	R-0	R-0	R-0	R-0
	RXDATA<15:8>							
7:0	R-0	R-0	R-0	R-0	R-0	R-0	R-0	R-0
	RXDATA<7:0>							

Legend:			
R = Readable bit	W = Writable bit	U = Unimplemented bit, read as '0'	
-n = Value at POR	'1' = Bit is set	'0' = Bit is cleared	x = Bit is unknown

bit 31-0 **RXDATA<31:0>:** Receive Data Buffer bits

At the end of a data transfer, the data in the shift register is loaded into the RXDATA register. This register works like a FIFO. The depth of the receive buffer is eight words.

REGISTER 22-10: SQI1STAT1: SQI STATUS REGISTER 1

Bit Range	Bit 31/23/15/7	Bit 30/22/14/6	Bit 29/21/13/5	Bit 28/20/12/4	Bit 27/19/11/3	Bit 26/18/10/2	Bit 25/17/9/1	Bit 24/16/8/0
31:24	U-0	U-0	U-0	U-0	U-0	U-0	U-0	U-0
	—	—	—	—	—	—	—	—
23:16	U-0	U-0	R-0	R-0	R-0	R-0	R-0	R-0
	—	—	TXFIFOFREE<5:0>					
15:8	U-0	U-0	U-0	U-0	U-0	U-0	U-0	U-0
	—	—	—	—	—	—	—	—
7:0	U-0	U-0	R-0	R-0	R-0	R-0	R-0	R-0
	—	—	RXFIFOCNT<5:0>					

Legend:			
R = Readable bit	W = Writable bit	U = Unimplemented bit, read as '0'	
-n = Value at POR	'1' = Bit is set	'0' = Bit is cleared	x = Bit is unknown

bit 31-22 **Unimplemented:** Read as '0'

bit 21-16 **TXFIFOFREE<5:0>:** Transmit FIFO Available Word Space bits

bit 15-6 **Unimplemented:** Read as '0'

bit 5-0 **RXFIFOCNT<5:0>:** Number of words of read data in the FIFO

 © 2020 Microchip Technology Inc.

REGISTER 22-11: SQI1STAT2: SQI STATUS REGISTER 2

Bit Range	Bit 31/23/15/7	Bit 30/22/14/6	Bit 29/21/13/5	Bit 28/20/12/4	Bit 27/19/11/3	Bit 26/18/10/2	Bit 25/17/9/1	Bit 24/16/8/0
31:24	U-0	U-0	U-0	U-0	U-0	U-0	U-0	U-0
	—	—	—	—	—	—	—	—
23:16	U-0	U-0	U-0	U-0	U-0	U-0	R-0	R-0
	—	—	—	—	—	—	CMDSTAT<1:0>	
15:8	U-0	U-0	U-0	U-0	R-0	R-0	R-0	R-0
	—	—	—	—	CONAVAIL<4:1>			
7:0	R-0	R-0	R-0	R-0	R-0	U-0	R-0	R-0
	CONAVAIL<0>	SQID3	SQID2	SQID1	SQID0	—	RXUN	TXOV

Legend:			
R = Readable bit	W = Writable bit	U = Unimplemented bit, read as '0'	
-n = Value at POR	'1' = Bit is set	'0' = Bit is cleared	x = Bit is unknown

bit 31-18 **Unimplemented:** Read as '0'

bit 17-16 **CMDSTAT<1:0>:** Current Command Status bits

These bits indicate the current command status.
11 = Reserved
10 = Receive
01 = Transmit
00 = Idle

bit 15-12 **Unimplemented:** Read as '0'

bit 11-7 **CONAVAIL<4:0>:** Control FIFO Space Available bits

These bits indicate the available control Word space.
11111 = 32 bytes are available
11110 = 31 bytes are available
•
•
•
00001 = 1 byte is available
00000 = No bytes are available

bit 6 **SQID3:** SQID3 Status bit
1 = Data is present on SQID3
0 = Data is not present on SQID3

bit 5 **SQID2:** SQID2 Status bit
1 = Data is present on SQID2
0 = Data is not present on SQID2

bit 4 **SQID1:** SQID1 Status bit
1 = Data is present on SQID1
0 = Data is not present on SQID1

bit 3 **SQID0:** SQID0 Status bit
1 = Data is present on SQID0
0 = Data is not present on SQID0

bit 2 **Unimplemented:** Read as '0'

bit 1 **RXUN:** Receive FIFO Underflow Status bit
1 = Receive FIFO Underflow has occurred
0 = Receive FIFO underflow has not occurred

bit 0 **TXOV:** Transmit FIFO Overflow Status bit
1 = Transmit FIFO overflow has occurred
0 = Transmit FIFO overflow has not occurred

REGISTER 22-12: SQI1BDCON: SQI BUFFER DESCRIPTOR CONTROL REGISTER

Bit Range	Bit 31/23/15/7	Bit 30/22/14/6	Bit 29/21/13/5	Bit 28/20/12/4	Bit 27/19/11/3	Bit 26/18/10/2	Bit 25/17/9/1	Bit 24/16/8/0
31:24	U-0	U-0	U-0	U-0	U-0	U-0	U-0	U-0
	—	—	—	—	—	—	—	—
23:16	U-0	U-0	U-0	U-0	U-0	U-0	U-0	U-0
	—	—	—	—	—	—	—	—
15:8	U-0	U-0	U-0	U-0	U-0	U-0	U-0	U-0
	—	—	—	—	—	—	—	—
7:0	U-0	U-0	U-0	U-0	U-0	R/W-0	R/W-0	R/W-0
	—	—	—	—	—	START	POLLEN	DMAEN

Legend:			
R = Readable bit	W = Writable bit	U = Unimplemented bit, read as '0'	
-n = Value at POR	'1' = Bit is set	'0' = Bit is cleared	x = Bit is unknown

bit 31-3 **Unimplemented:** Read as '0'

bit 2 **START:** Buffer Descriptor Processor Start bit
- 1 = Start the buffer descriptor processor
- 0 = Disable the buffer descriptor processor

bit 1 **POLLEN:** Buffer Descriptor Poll Enable bit
- 1 = BDP poll is enabled
- 0 = BDP poll is not enabled

bit 0 **DMAEN:** DMA Enable bit
- 1 = DMA is enabled
- 0 = DMA is disabled

REGISTER 22-13: SQI1BDCURADD: SQI BUFFER DESCRIPTOR CURRENT ADDRESS REGISTER

Bit Range	Bit 31/23/15/7	Bit 30/22/14/6	Bit 29/21/13/5	Bit 28/20/12/4	Bit 27/19/11/3	Bit 26/18/10/2	Bit 25/17/9/1	Bit 24/16/8/0
31:24	R-0	R-0	R-0	R-0	R-0	R-0	R-0	R-0
	BDCURRADDR<31:24>							
23:16	R-0	R-0	R-0	R-0	R-0	R-0	R-0	R-0
	BDCURRADDR<23:16>							
15:8	R-0	R-0	R-0	R-0	R-0	R-0	R-0	R-0
	BDCURRADDR<15:8>							
7:0	R-0	R-0	R-0	R-0	R-0	R-0	R-0	R-0
	BDCURRADDR<7:0>							

Legend:			
R = Readable bit	W = Writable bit	U = Unimplemented bit, read as '0'	
-n = Value at POR	'1' = Bit is set	'0' = Bit is cleared	x = Bit is unknown

bit 31-0 **BDCURRADDR<31:0>:** Current Buffer Descriptor Address bits
These bits contain the address of the current descriptor being processed by the Buffer Descriptor Processor.

 © 2020 Microchip Technology Inc.

REGISTER 22-14: SQI1BDBASEADD: SQI BUFFER DESCRIPTOR BASE ADDRESS REGISTER

Bit Range	Bit 31/23/15/7	Bit 30/22/14/6	Bit 29/21/13/5	Bit 28/20/12/4	Bit 27/19/11/3	Bit 26/18/10/2	Bit 25/17/9/1	Bit 24/16/8/0
31:24	R/W-0	R/W-0	R/W-0	R/W-0	R/W-0	R/W-0	R/W-0	R/W-0
	BDADDR<31:24>							
23:16	R/W-0	R/W-0	R/W-0	R/W-0	R/W-0	R/W-0	R/W-0	R/W-0
	BDADDR<23:16>							
15:8	R/W-0	R/W-0	R/W-0	R/W-0	R/W-0	R/W-0	R/W-0	R/W-0
	BDADDR<15:8>							
7:0	R/W-0	R/W-0	R/W-0	R/W-0	R/W-0	R/W-0	R/W-0	R/W-0
	BDADDR<7:0>							

Legend:			
R = Readable bit	W = Writable bit	U = Unimplemented bit, read as '0'	
-n = Value at POR	'1' = Bit is set	'0' = Bit is cleared	x = Bit is unknown

bit 31-0 **BDADDR<31:0>:** DMA Base Address bits
These bits contain the physical address of the root buffer descriptor. This register should be updated only when the DMA is idle.

REGISTER 22-15: SQI1BDSTAT: SQI BUFFER DESCRIPTOR STATUS REGISTER

Bit Range	Bit 31/23/15/7	Bit 30/22/14/6	Bit 29/21/13/5	Bit 28/20/12/4	Bit 27/19/11/3	Bit 26/18/10/2	Bit 25/17/9/1	Bit 24/16/8/0
31:24	U-0	U-0	U-0	U-0	U-0	U-0	U-0	U-0
	—	—	—	—	—	—	—	—
23:16	U-0	U-0	R-x	R-x	R-x	R-x	R-x	R-x
	—	—	BDSTATE<3:0>				DMASTART	DMAACTV
15:8	R-x	R-x	R-x	R-x	R-x	R-x	R-x	R-x
	BDCON<15:8>							
7:0	R-x	R-x	R-x	R-x	R-x	R-x	R-x	R-x
	BDCON<7:0>							

Legend:			
R = Readable bit	W = Writable bit	U = Unimplemented bit, read as '0'	
-n = Value at POR	'1' = Bit is set	'0' = Bit is cleared	x = Bit is unknown

bit 31-22 **Unimplemented:** Read as '0'

bit 21-18 **BDSTATE<3:0>:** DMA Buffer Descriptor Processor State Status bits
These bits return the current state of the buffer descriptor processor:
5 = Fetched buffer descriptor is disabled
4 = Descriptor is done
3 = Data phase
2 = Buffer descriptor is loading
1 = Descriptor fetch request is pending
0 = Idle

bit 17 **DMASTART:** DMA Buffer Descriptor Processor Start Status bit
1 = DMA has started
0 = DMA has not started

bit 16 **DMAACTV:** DMA Buffer Descriptor Processor Active Status bit
1 = Buffer Descriptor Processor is active
0 = Buffer Descriptor Processor is idle

bit 15-0 **BDCON<15:0>:** DMA Buffer Descriptor Control Word bits
These bits contain the current buffer descriptor control word.

REGISTER 22-16: SQI1BDPOLLCON: SQI BUFFER DESCRIPTOR POLL CONTROL REGISTER

Bit Range	Bit 31/23/15/7	Bit 30/22/14/6	Bit 29/21/13/5	Bit 28/20/12/4	Bit 27/19/11/3	Bit 26/18/10/2	Bit 25/17/9/1	Bit 24/16/8/0
31:24	U-0	U-0	U-0	U-0	U-0	U-0	U-0	U-0
	—	—	—	—	—	—	—	—
23:16	U-0	U-0	U-0	U-0	U-0	U-0	U-0	U-0
	—	—	—	—	—	—	—	—
15:8	R/W-0	R/W-0	R/W-0	R/W-0	R/W-0	R/W-0	R/W-0	R/W-0
	POLLCON<15:8>							
7:0	R/W-0	R/W-0	R/W-0	R/W-0	R/W-0	R/W-0	R/W-0	R/W-0
	POLLCON<7:0>							

Legend:			
R = Readable bit	W = Writable bit	U = Unimplemented bit, read as '0'	
-n = Value at POR	'1' = Bit is set	'0' = Bit is cleared	x = Bit is unknown

bit 31-16 **Unimplemented:** Read as '0'

bit 15-0 **POLLCON<15:0>:** Buffer Descriptor Processor Poll Status bits
These bits indicate the number of cycles the BDP would wait before refetching the descriptor control word if the previous descriptor fetched was disabled.

REGISTER 22-17: SQI1BDTXDSTAT: SQI BUFFER DESCRIPTOR DMA TRANSMIT STATUS REGISTER

Bit Range	Bit 31/23/15/7	Bit 30/22/14/6	Bit 29/21/13/5	Bit 28/20/12/4	Bit 27/19/11/3	Bit 26/18/10/2	Bit 25/17/9/1	Bit 24/16/8/0
31:24	U-0	U-0	U-0	R-x	R-x	R-x	R-x	U-0
	—	—	—	TXSTATE<3:0>				—
23:16	U-0	U-0	U-0	R-x	R-x	R-x	R-x	R-x
	—	—	—	TXBUFCNT<4:0>				
15:8	U-0	U-0	U-0	U-0	U-0	U-0	U-0	U-0
	—	—	—	—	—	—	—	—
7:0	R-x	R-x	R-x	R-x	R-x	R-x	R-x	R-x
	TXCURBUFLEN<7:0>							

Legend:			
R = Readable bit	W = Writable bit	U = Unimplemented bit, read as '0'	
-n = Value at POR	'1' = Bit is set	'0' = Bit is cleared	x = Bit is unknown

bit 31-29 **Unimplemented:** Read as '0'

bit 28-25 **TXSTATE<3:0>:** Current DMA Transmit State Status bits
These bits provide information on the current DMA receive states.

bit 24-21 **Unimplemented:** Read as '0'

bit 20-16 **TXBUFCNT<4:0>:** DMA Buffer Byte Count Status bits
These bits provide information on the internal FIFO space.

bit 15-8 **Unimplemented:** Read as '0'

bit 7-0 **TXCURBUFLEN<7:0>:** Current DMA Transmit Buffer Length Status bits
These bits provide the length of the current DMA transmit buffer.

 © 2020 Microchip Technology Inc.

REGISTER 22-18: SQI1BDRXDSTAT: SQI BUFFER DESCRIPTOR DMA RECEIVE STATUS REGISTER

Bit Range	Bit 31/23/15/7	Bit 30/22/14/6	Bit 29/21/13/5	Bit 28/20/12/4	Bit 27/19/11/3	Bit 26/18/10/2	Bit 25/17/9/1	Bit 24/16/8/0
31:24	U-0	U-0	U-0	R-x	R-x	R-x	R-x	U-0
	—	—	—	RXSTATE<3:0>				—
23:16	U-0	U-0	U-0	R-x	R-x	R-x	R-x	R-x
	—	—	—	RXBUFCNT<4:0>				
15:8	U-0	U-0	U-0	U-0	U-0	U-0	U-0	U-0
	—	—	—	—	—	—	—	—
7:0	R-x	R-x	R-x	R-x	R-x	R-x	R-x	R-x
	RXCURBUFLEN<7:0>							

Legend:			
R = Readable bit	W = Writable bit	U = Unimplemented bit, read as '0'	
-n = Value at POR	'1' = Bit is set	'0' = Bit is cleared	x = Bit is unknown

bit 31-29 **Unimplemented:** Read as '0'

bit 28-25 **RXSTATE<3:0>:** Current DMA Receive State Status bits
These bits provide information on the current DMA receive states.

bit 24-21 **Unimplemented:** Read as '0'

bit 20-16 **RXBUFCNT<4:0>:** DMA Buffer Byte Count Status bits
These bits provide information on the internal FIFO space.

bit 15-8 **Unimplemented:** Read as '0'

bit 7-0 **RXCURBUFLEN<7:0>:** Current DMA Receive Buffer Length Status bits
These bits provide the length of the current DMA receive buffer.

REGISTER 22-19: SQI1THR: SQI THRESHOLD CONTROL REGISTER

Bit Range	Bit 31/23/15/7	Bit 30/22/14/6	Bit 29/21/13/5	Bit 28/20/12/4	Bit 27/19/11/3	Bit 26/18/10/2	Bit 25/17/9/1	Bit 24/16/8/0
31:24	U-0	U-0	U-0	U-0	U-0	U-0	U-0	U-0
	—	—	—	—	—	—	—	—
23:16	U-0	U-0	U-0	U-0	U-0	U-0	U-0	U-0
	—	—	—	—	—	—	—	—
15:8	U-0	U-0	U-0	U-0	U-0	U-0	U-0	U-0
	—	—	—	—	—	—	—	—
7:0	U-0	U-0	U-0	R/W-0	R/W-0	R/W-0	R/W-0	R/W-0
	—	—	—	THRES<4:0>				

Legend:			
R = Readable bit	W = Writable bit	U = Unimplemented bit, read as '0'	
-n = Value at POR	'1' = Bit is set	'0' = Bit is cleared	x = Bit is unknown

bit 31-5 **Unimplemented:** Read as '0'

bit 4-0 **THRES<4:0>:** SQI Control Threshold Value bits
The SQI control threshold interrupt is asserted when the amount of space indicated by THRES<4:0> is available in the SQI control buffer.

REGISTER 22-20: SQI1INTSIGEN: SQI INTERRUPT SIGNAL ENABLE REGISTER

Bit Range	Bit 31/23/15/7	Bit 30/22/14/6	Bit 29/21/13/5	Bit 28/20/12/4	Bit 27/19/11/3	Bit 26/18/10/2	Bit 25/17/9/1	Bit 24/16/8/0
31:24	U-0	U-0	U-0	U-0	U-0	U-0	U-0	U-0
	—	—	—	—	—	—	—	—
23:16	U-0	U-0	U-0	U-0	U-0	U-0	U-0	U-0
	—	—	—	—	—	—	—	—
15:8	U-0	U-0	U-0	U-0	R/W-0	R/W-0	R/W-0	R/W-0
	—	—	—	—	DMAEISE	PKT DONEISE	BD DONEISE	CON THRISE
7:0	R/W-0	R/W-0	R/W-0	R/W-0	R/W-0	R/W-0	R/W-0	R/W-0
	CON EMPTYISE	CON FULLISE	RX THRISE	RX FULLISE	RX EMPTYISE	TX THRISE	TX FULLISE	TX EMPTYISE

Legend:			
R = Readable bit	W = Writable bit	U = Unimplemented bit, read as '0'	
-n = Value at POR	'1' = Bit is set	'0' = Bit is cleared	x = Bit is unknown

bit 31-12 **Unimplemented:** Read as '0'

bit 11 **DMAEISE:** DMA Bus Error Interrupt Signal Enable bit
- 1 = Interrupt signal is enabled
- 0 = Interrupt signal is disabled

bit 10 **PKTDONEISE:** Receive Error Interrupt Signal Enable bit
- 1 = Interrupt signal is enabled
- 0 = Interrupt signal is disabled

bit 9 **BDDONEISE:** Transmit Error Interrupt Signal Enable bit
- 1 = Interrupt signal is enabled
- 0 = Interrupt signal is disabled

bit 8 **CONTHRISE:** Control Buffer Threshold Interrupt Signal Enable bit
- 1 = Interrupt signal is enabled
- 0 = Interrupt signal is disabled

bit 7 **CONEMPTYISE:** Control Buffer Empty Interrupt Signal Enable bit
- 1 = Interrupt signal is enabled
- 0 = Interrupt signal is disabled

bit 6 **CONFULLISE:** Control Buffer Full Interrupt Signal Enable bit
- 1 = Interrupt signal is enabled
- 0 = Interrupt signal is disabled

bit 5 **RXTHRISE:** Receive Buffer Threshold Interrupt Signal Enable bit
- 1 = Interrupt signal is enabled
- 0 = Interrupt signal is disabled

bit 4 **RXFULLISE:** Receive Buffer Full Interrupt Signal Enable bit
- 1 = Interrupt signal is enabled
- 0 = Interrupt signal is disabled

bit 3 **RXEMPTYISE:** Receive Buffer Empty Interrupt Signal Enable bit
- 1 = Interrupt signal is enabled
- 0 = Interrupt signal is disabled

bit 2 **TXTHRISE:** Transmit Buffer Threshold Interrupt Signal Enable bit
- 1 = Interrupt signal is enabled
- 0 = Interrupt signal is disabled

bit 1 **TXFULLISE:** Transmit Buffer Full Interrupt Signal Enable bit
- 1 = Interrupt signal is enabled
- 0 = Interrupt signal is disabled

bit 0 **TXEMPTYISE:** Transmit Buffer Empty Interrupt Signal Enable bit
- 1 = Interrupt signal is enabled
- 0 = Interrupt signal is disabled

 © 2020 Microchip Technology Inc.

REGISTER 22-21: SQI1TAPCON: SQI TAP CONTROL REGISTER

Bit Range	Bit 31/23/15/7	Bit 30/22/14/6	Bit 29/21/13/5	Bit 28/20/12/4	Bit 27/19/11/3	Bit 26/18/10/2	Bit 25/17/9/1	Bit 24/16/8/0
31:24	U-0	U-0	U-0	U-0	U-0	U-0	U-0	U-0
	—	—	—	—	—	—	—	—
23:16	U-0	U-0	U-0	U-0	U-0	U-0	U-0	U-0
	—	—	—	—	—	—	—	—
15:8	U-0	U-0	R/W-0	R/W-0	R/W-0	R/W-0	R/W-0	R/W-0
	—	—	CLKINDLY<5:0>					
7:0	R/W-0	R/W-0	R/W-0	R/W-0	R/W-0	R/W-0	R/W-0	R/W-0
	DATAOUTDLY<3:0>				CLKOUTDLY<3:0>			

Legend:			
R = Readable bit	W = Writable bit	U = Unimplemented bit, read as '0'	
-n = Value at POR	'1' = Bit is set	'0' = Bit is cleared	x = Bit is unknown

bit 31-14 **Unimplemented:** Read as '0'

bit 13-8 **CLKINDLY<5:0>:** SQI Clock Input Delay bits
These bits are used to add fractional delays to SQI Clock Input while sampling the incoming data.
111111 = 64 taps added on clock input
111110 = 63 taps added on clock input
•
•
•
000001 = 2 taps added on clock input
000000 = 1 tap added on clock input

bit 7-4 **DATAOUTDLY<3:0>:** SQI Data Output Delay bits
These bits are used to add fractional delays to SQI Data Output while writing the data to the Flash.
1111 = 16 taps added on clock output
1110 = 15 taps added on clock output
•
•
•
0001 = 2 taps added on clock output
0000 = 1 tap added on clock output

bit 3-0 **CLKOUTDLY<3:0>:** SQI Clock Output Delay bits
These bits are used to add fractional delays to SQI Clock Output while writing the data to the Flash.
1111 = 16 taps added on clock output
1110 = 15 taps added on clock output
•
•
•
0001 = 2 taps added on clock output
0000 = 1 tap added on clock output

REGISTER 22-22: SQI1MEMSTAT: SQI MEMORY STATUS REGISTER

Bit Range	Bit 31/23/15/7	Bit 30/22/14/6	Bit 29/21/13/5	Bit 28/20/12/4	Bit 27/19/11/3	Bit 26/18/10/2	Bit 25/17/9/1	Bit 24/16/8/0
31:24	U-0	U-0	U-0	U-0	U-0	U-0	U-0	U-0
	—	—	—	—	—	—	—	—
23:16	U-0	U-0	U-0	R/W-0	R/W-0	R/W-0	R/W-0	R/W-0
	—	—	—	STATPOS	STATTYPE<1:0>		STATBYTES<1:0>	
15:8	R/W-0	R/W-0	R/W-0	R/W-0	R/W-0	R/W-0	R/W-0	R/W-0
	STATDATA<7:0>							
7:0	R/W-0	R/W-0	R/W-0	R/W-0	R/W-0	R/W-0	R/W-0	R/W-0
	STATCMD<7:0>							

Legend:			
R = Readable bit	W = Writable bit	U = Unimplemented bit, read as '0'	
-n = Value at POR	'1' = Bit is set	'0' = Bit is cleared	x = Bit is unknown

bit 31-21 **Unimplemented:** Read as '0'

bit 20 **STATPOS:** Status Bit Position in Flash bit

Indicates the BUSY bit position in the Flash Status register. This bit is added to support all Flash types (with BUSY bit at 0 and at 7).

1 = BUSY bit position is bit 7 in status register

0 = BUSY bit position is bit 0 in status register

bit 19-18 **STATTYPE<1:0>:** Status Command/Read Lane Mode bits

11 = Reserved

10 = Status command and read are executed in Quad Lane mode

01 = Status command and read are executed in Dual Lane mode

00 = Status command and read are executed in Single Lane mode

bit 17-16 **STATBYTES<1:0>:** Number of Status Bytes bits

11 = Reserved

10 = Status command/read is 2 bytes long

01 = Status command/read is 1 byte long

00 = Reserved

bit 15-8 **STATDATA<7:0>:** Status Data bits

These bits contain the status value of the Flash device

bit 7-0 **STATCMD<7:0>:** Status Command bits

The status check command is written into these bits

 © 2020 Microchip Technology Inc.

23.0 INTER-INTEGRATED CIRCUIT (I^2C)

Note: This data sheet summarizes the features of the PIC32MZ W1 family of devices. It is not intended to be a comprehensive reference source. To complement the information in this data sheet, refer to **Section 24. "Inter-Integrated Circuit (I^2C)"** (DS60001116) in the *"PIC32 Family Reference Manual"*, which is available from the Microchip web site (www.microchip.com/PIC32).

The I^2C module provides complete hardware support for both Slave and Multi-Master modes of the I^2C serial communication standard.

Each I^2C module has a 2-pin interface:

- SCLx pin is clock
- SDAx pin is data

Each I^2C module offers the following key features:

- I^2C interface supporting both master and slave operation
- I^2C Slave mode supports 7-bit and 10-bit addressing
- I^2C Master mode supports 7-bit and 10-bit addressing
- I^2C port allows bidirectional transfers between master and slaves
- Serial clock synchronization for the I^2C Port can be used as a handshake mechanism to Suspend and Resume Serial Transfer (SCLREL control)
- I^2C supports multi-master operation; detects bus collision and arbitrates accordingly
- Provides support for Slave mode address bit masking
- SMbus support
- Supports up to 1 MHz operation

TABLE 23-1: I^2C PB CLOCK MAPPING

I^2C Instance	PB Clock
I2C1	PB2_CLK
I2C2	PB3_CLK

Figure 23-1 illustrates the I^2C module connection diagram.

FIGURE 23-1: I²C CONNECTION DIAGRAM

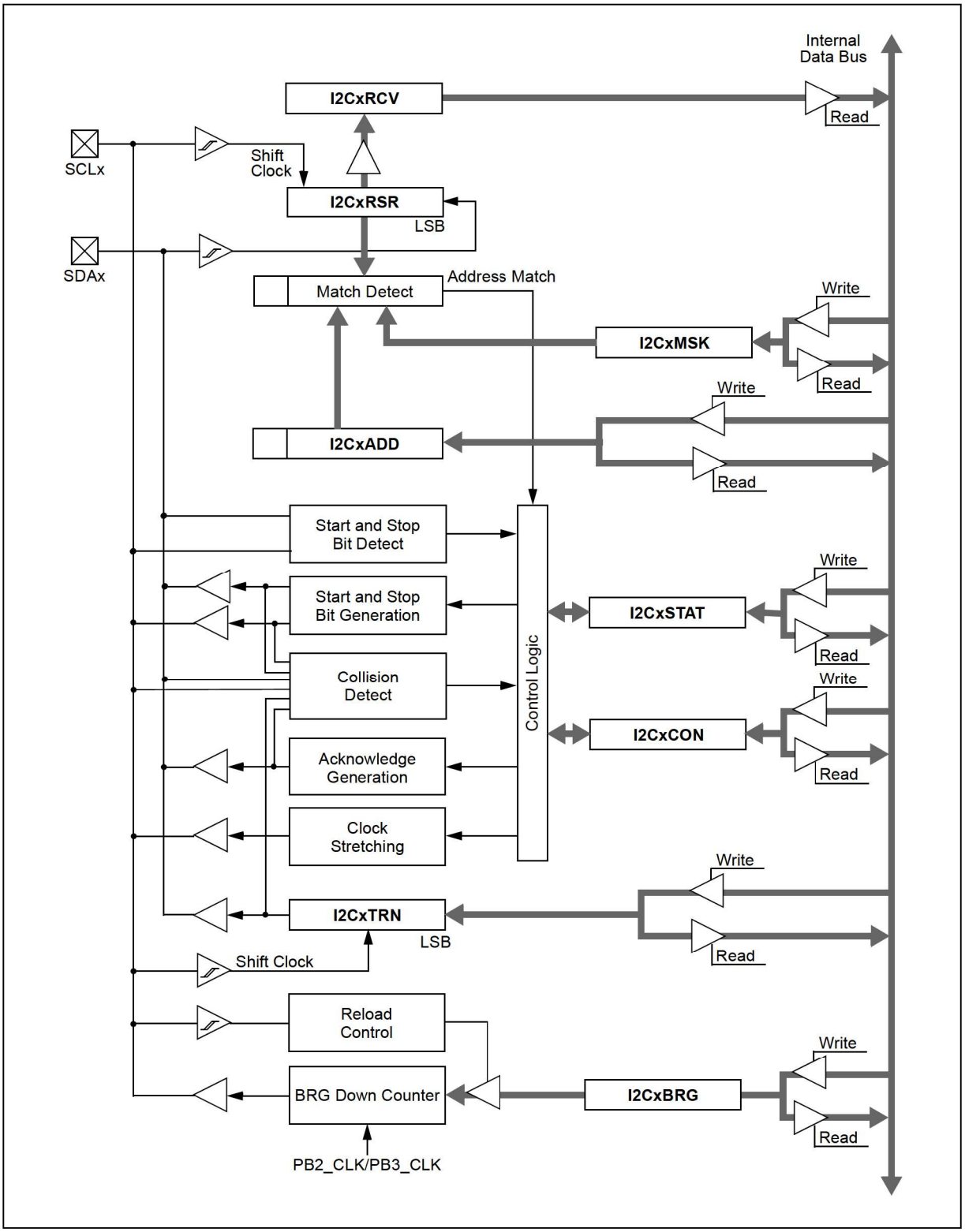

 © 2020 Microchip Technology Inc.

23.1 I²C Control Registers

TABLE 23-2: I²C1 REGISTER MAP

Virtual Address (BF82_#)	Register Name(1)	Bit Range	Bits																All Resets
			31/15	30/14	29/13	28/12	27/11	26/10	25/9	24/8	23/7	22/6	21/5	20/4	19/3	18/2	17/1	16/0	
0400	I2C1CON	31:16	—	—	—	—	—	—	—	—	—	PCIE	SCIE	BOEN	SDAHT	SBCDE	AHEN	DHEN	0000
		15:0	ON	—	SIDL	SCLREL	STRICT	A10M	DISSLW	SMEN	GCEN	STREN	ACKDT	ACKEN	RCEN	PEN	RSEN	SEN	1000
0410	I2C1STAT	31:16	—	—	—	—	—	—	—	—	—	—	—	—	—	—	—	—	0000
		15:0	ACKSTAT	TRSTAT	ACKTIM	—	—	BCL	GCSTAT	ADD10	IWCOL	I2COV	D/A	P	S	R/W	RBF	TBF	0000
0420	I2C1ADD	31:16	—	—	—	—	—	—	—	—	—	—	—	—	—	—	—	—	0000
		15:0	—	—	—	—	—	—	I2CADD (Address Register)										0000
0430	I2C1MSK	31:16	—	—	—	—	—	—	—	—	—	—	—	—	—	—	—	—	0000
		15:0	—	—	—	—	—	—	I2CMSK (Address Mask Register)										0000
0440	I2C1BRG	31:16	—	—	—	—	—	—	—	—	—	—	—	—	—	—	—	—	0000
		15:0	I2CBRG (Baud Rate Generator Register)																0000
0450	I2C1TRN	31:16	—	—	—	—	—	—	—	—	—	—	—	—	—	—	—	—	0000
		15:0	—	—	—	—	—	—	—	—	I2CTRN (Transmit Register)								0000
0460	I2C1RCV	31:16	—	—	—	—	—	—	—	—	—	—	—	—	—	—	—	—	0000
		15:0	—	—	—	—	—	—	—	—	I2CRV (Receive Register)								0000

Legend: x = unknown value on Reset; — = unimplemented, read as '0'. Reset values are shown in hexadecimal.

Note 1: All registers in this table except I2CxRCV have corresponding CLR, SET and INV registers at their virtual addresses, plus offsets of 0x4, 0x8 and 0xC, respectively. See **Section 13.3 "CLR, SET, and INV Registers"** for more information.

TABLE 23-3: I²C2 REGISTER MAP

Virtual Address (BF84_#)	Register Name(1)	Bit Range	Bits																All Resets
			31/15	30/14	29/13	28/12	27/11	26/10	25/9	24/8	23/7	22/6	21/5	20/4	19/3	18/2	17/1	16/0	
0400	I2C2CON	31:16	—	—	—	—	—	—	—	—	—	PCIE	SCIE	BOEN	SDAHT	SBCDE	AHEN	DHEN	0000
		15:0	ON	—	SIDL	SCLREL	STRICT	A10M	DISSLW	SMEN	GCEN	STREN	ACKDT	ACKEN	RCEN	PEN	RSEN	SEN	1000
0410	I2C2STAT	31:16	—	—	—	—	—	—	—	—	—	—	—	—	—	—	—	—	0000
		15:0	ACKSTAT	TRSTAT	ACKTIM	—	—	BCL	GCSTAT	ADD10	IWCOL	I2COV	D/A	P	S	R/W	RBF	TBF	0000
0420	I2C2ADD	31:16	—	—	—	—	—	—	—	—	—	—	—	—	—	—	—	—	0000
		15:0	—	—	—	—	—	—	I2CADD (Address Register)										0000

Legend: x = unknown value on Reset; — = unimplemented, read as '0'. Reset values are shown in hexadecimal.

Note 1: All registers in this table except I2CxRCV have corresponding CLR, SET and INV registers at their virtual addresses, plus offsets of 0x4, 0x8 and 0xC, respectively. See **Section 13.3 "CLR, SET, and INV Registers"** for more information.

© 2020 Microchip Technology Inc.

TABLE 23-3: I²C2 REGISTER MAP (CONTINUED)

Virtual Address (BF84_#)	Register Name(1)	Bit Range	Bits																All Resets
			31/15	30/14	29/13	28/12	27/11	26/10	25/9	24/8	23/7	22/6	21/5	20/4	19/3	18/2	17/1	16/0	
0430	I2C2MSK	31:16	—	—	—	—	—	—	—	—	—	—	—	—	—	—	—	—	0000
		15:0	—	—	—	—	—	—	I2CADD (Address Mask Register)										0000
0440	I2C2BRG	31:16	—	—	—	—	—	—	—	—	—	—	—	—	—	—	—	—	0000
		15:0	I2CBRG (Baud Rate Generator Register)																0000
0450	I2C2TRN	31:16	—	—	—	—	—	—	—	—	—	—	—	—	—	—	—	—	0000
		15:0	—	—	—	—	—	—	—	—	I2CTRN (Transmit Register)								0000
0460	I2C2RCV	31:16	—	—	—	—	—	—	—	—	—	—	—	—	—	—	—	—	0000
		15:0	—	—	—	—	—	—	—	—	I2CRCV (Receive Register)								0000

Legend: x = unknown value on Reset; — = unimplemented, read as '0'. Reset values are shown in hexadecimal.

Note 1: All registers in this table except I2CxRCV have corresponding CLR, SET and INV registers at their virtual addresses, plus offsets of 0x4, 0x8 and 0xC, respectively. See **Section 13.3 "CLR, SET, and INV Registers"** for more information.

© 2020 Microchip Technology Inc.

REGISTER 23-1: I2CxCON: I²C CONTROL REGISTER

Bit Range	Bit 31/23/15/7	Bit 30/22/14/6	Bit 29/21/13/5	Bit 28/20/12/4	Bit 27/19/11/3	Bit 26/18/10/2	Bit 25/17/9/1	Bit 24/16/8/0
31:24	U-0	U-0	U-0	U-0	U-0	U-0	U-0	U-0
	—	—	—	—	—	—	—	—
23:16	U-0	R/W-0	R/W-0	R/W-0	R/W-0	R/W-0	R/W-0	R/W-0
	—	PCIE	SCIE	BOEN	SDAHT	SBCDE	AHEN	DHEN
15:8	R/W-0	U-0	R/W-0	R/W-1, HC	R/W-0	R/W-0	R/W-0	R/W-0
	ON	—	SIDL	SCKREL	STRICT	A10M	DISSLW	SMEN
7:0	R/W-0	R/W-0	R/W-0	R/W-0, HC	R/W-0, HC	R/W-0, HC	R/W-0, HC	R/W-0, HC
	GCEN	STREN	ACKDT	ACKEN	RCEN	PEN	RSEN	SEN

Legend:	HC = Hardware Cleared		
R = Readable bit	W = Writable bit	U = Unimplemented bit, read as '0'	
-n = Value at POR	'1' = Bit is set	'0' = Bit is cleared	x = Bit is unknown

bit 31-23 **Unimplemented:** Read as '0'

bit 22 **PCIE:** Stop Condition Interrupt Enable bit (I²C Slave mode only)
1 = Enable interrupt on detection of Stop condition
0 = Stop detection interrupts are disabled

bit 21 **SCIE:** Start Condition Interrupt Enable bit (I²C Slave mode only)
1 = Enable interrupt on detection of Start or Restart conditions
0 = Start detection interrupts are disabled

bit 20 **BOEN:** Buffer Overwrite Enable bit (I²C Slave mode only)
1 = I2CxRCV is updated and $\overline{ACK}$ is generated for a received address/data byte, ignoring the state of the I2COV bit (I2CxSTAT<6>)only if the RBF bit (I2CxSTAT<2>) = 0
0 = I2CxRCV is only updated when the I2COV bit (I2CxSTAT<6>) is clear

bit 19 **SDAHT:** SDA Hold Time Selection bit
1 = Minimum of 300 ns hold time on SDA after the falling edge of SCL
0 = Minimum of 100 ns hold time on SDA after the falling edge of SCL

Note: This bit is not supported for 1 MHz.

bit 18 **SBCDE:** Slave Mode Bus Collision Detect Enable bit (I²C Slave mode only)
1 = Enable slave bus collision interrupts
0 = Slave bus collision interrupts are disabled

bit 17 **AHEN:** Address Hold Enable bit (Slave mode only)
1 = Following the 8th falling edge of SCL for a matching received address byte; SCKREL bit will be cleared and the SCL will be held low.
0 = Address holding is disabled

bit 16 **DHEN:** Data Hold Enable bit (I²C Slave mode only)
1 = Following the 8th falling edge of SCL for a received data byte; slave hardware clears the SCKREL bit and SCL is held low
0 = Data holding is disabled

bit 15 **ON:** I²C Enable bit
1 = Enables the I²C module and configures the SDA and SCL pins as serial port pins
0 = Disables the I²C module; all I²C pins are controlled by PORT functions

bit 14 **Unimplemented:** Read as '0'

bit 13 **SIDL:** Stop in Idle Mode bit
1 = Discontinue module operation when device enters Idle mode
0 = Continue module operation in Idle mode

REGISTER 23-1: I2CxCON: I²C CONTROL REGISTER (CONTINUED)

bit 12 **SCLREL:** SCLx Release Control bit (when operating as I²C slave)
In I2C Slave mode only; module reset and (ON = 0) sets SCLREL = 1.
If STREN = 0:
1 = Release clock
0 = Force clock low (clock stretch)
Bit is automatically cleared to '0' at beginning of slave transmission.
If STREN = 1:
1 = Release clock
0 = Holds clock low (clock stretch)
User may program this bit to '0' to force a clock stretch at the next SCLx low. Bit is automatically cleared to '0' at beginning of slave transmission; automatically cleared to '0' at end of slave reception.

bit 11 **STRICT:** Strict I²C Reserved Address Rule Enable bit
1 = Strict reserved addressing is enforced. Device does not respond to reserved address space or generate addresses in reserved address space.
0 = Strict I²C reserved address rule is not enabled

bit 10 **A10M:** 10-bit Slave Address bit
1 = I2CxADD is a 10-bit slave address
0 = I2CxADD is a 7-bit slave address

bit 9 **DISSLW:** Disable Slew Rate Control bit
1 = Slew rate control is disabled
0 = Slew rate control is enabled

bit 8 **SMEN:** SMBus Input Levels bit
1 = Enable I/O pin thresholds compliant with SMBus specification
0 = Disable SMBus input thresholds

bit 7 **GCEN:** General Call Enable bit (when operating as I²C slave)
1 = Enable interrupt when a general call address is received in the I2CxRSR (module is enabled for reception)
0 = General call address is disabled

bit 6 **STREN:** SCLx Clock Stretch Enable bit (when operating as I²C slave)
Used in conjunction with SCLREL bit.
1 = Enable software or receive clock stretching
0 = Disable software or receive clock stretching

bit 5 **ACKDT:** Acknowledge Data bit (when operating as I²C master, applicable during master receive)
Value that is transmitted when the software initiates an Acknowledge sequence.
1 = Send NACK during acknowledge
0 = Send ACK during acknowledge

bit 4 **ACKEN:** Acknowledge Sequence Enable bit
(when operating as I²C master, applicable during master receive)
1 = Initiate Acknowledge sequence on SDAx and SCLx pins and transmit ACKDT data bit. Hardware clear at end of master Acknowledge sequence.
0 = Acknowledge sequence not in progress

bit 3 **RCEN:** Receive Enable bit (when operating as I²C master)
1 = Enables Receive mode for I²C. Hardware clear at end of eighth bit of master receive data byte.
0 = Receive sequence not in progress

bit 2 **PEN:** Stop Condition Enable bit (when operating as I²C master)
1 = Initiate Stop condition on SDAx and SCLx pins. Hardware clear at end of master Stop sequence.
0 = Stop condition not in progress

bit 1 **RSEN:** Repeated Start Condition Enable bit (when operating as I²C master)
1 = Initiate repeated Start condition on SDAx and SCLx pins. Hardware clear at end of master repeated Start sequence.
0 = Repeated Start condition not in progress

bit 0 **SEN:** Start Condition Enable bit (when operating as I²C master)
1 = Initiate Start condition on SDAx and SCLx pins. Hardware clear at end of master Start sequence.
0 = Start condition not in progress

 © 2020 Microchip Technology Inc.

REGISTER 23-2: I2CxSTAT: I²C STATUS REGISTER

Bit Range	Bit 31/23/15/7	Bit 30/22/14/6	Bit 29/21/13/5	Bit 28/20/12/4	Bit 27/19/11/3	Bit 26/18/10/2	Bit 25/17/9/1	Bit 24/16/8/0
31:24	U-0	U-0	U-0	U-0	U-0	U-0	U-0	U-0
	—	—	—	—	—	—	—	—
23:16	U-0	U-0	U-0	U-0	U-0	U-0	U-0	U-0
	—	—	—	—	—	—	—	—
15:8	R-0, HS, HC	R-0, HS, HC	R/C-0, HS, HC	U-0	U-0	R/C-0, HS	R-0, HS, HC	R-0, HS, HC
	ACKSTAT	TRSTAT	ACKTIM	—	—	BCL	GCSTAT	ADD10
7:0	R/C-0, HS, SC	R/C-0, HS, SC	R-0, HS, HC	R/C-0, HS, HC	R/C-0, HS, HC	R-0, HS, HC	R-0, HS, HC	R-0, HS, HC
	IWCOL	I2COV	D_A	P	S	R_W	RBF	TBF

Legend:	HS = Hardware Set	HC = Hardware Cleared	SC = Software Cleared
R = Readable bit	W = Writable bit	U = Unimplemented bit, read as '0'	
-n = Value at POR	'1' = Bit is set	'0' = Bit is cleared	C = Clearable bit

bit 31-16 **Unimplemented:** Read as '0'

bit 15 **ACKSTAT:** Acknowledge Status bit
(when operating as I²C master, applicable to master transmit operation)
1 = NACK received from slave
0 = ACK received from slave
Hardware set or cleared at the end of slave acknowledge.

bit 14 **TRSTAT:** Transmit Status bit (when operating as I²C master, applicable to master transmit operation)
1 = Master transmit is in progress (8 bits + ACK)
0 = Master transmit is not in progress
Hardware set at beginning of master transmission. Hardware cleared at the end of slave acknowledge.

bit 13 **ACKTIM:** Acknowledge Time Status bit (Valid in I²C Slave mode only)
1 = I²C bus is in an Acknowledge sequence, set on the eight falling edge of SCL clock
0 = Not an Acknowledge sequence, cleared on 9th rising edge of SCL clock

bit 12-11 **Unimplemented:** Read as '0'

bit 10 **BCL:** Master Bus Collision Detect bit
1 = A bus collision is detected during a master operation
0 = No collision
Hardware set at detection of bus collision.

bit 9 **GCSTAT:** General Call Status bit
1 = General call address is received
0 = General call address is not received
Hardware set when address matches general call address. Hardware cleared at stop detection.

bit 8 **ADD10:** 10-bit Address Status bit
1 = 10-bit address is matched
0 = 10-bit address is not matched
Hardware set at match of 2nd byte of matched 10-bit address. Hardware cleared at stop detection.

bit 7 **IWCOL:** Write Collision Detect bit
1 = An attempt to write the I2CxTRN register failed because the I²C module is busy
0 = No collision
Hardware set at occurrence of write to I2CxTRN while busy (cleared by software).

bit 6 **I2COV:** Receive Overflow Flag bit
1 = A byte is received while the I2CxRCV register is still holding the previous byte
0 = No overflow
Hardware set at attempt to transfer I2CxRSR to I2CxRCV (cleared by software).

REGISTER 23-2: I2CxSTAT: I²C STATUS REGISTER (CONTINUED)

bit 5 **D_A:** Data/Address bit (when operating as I²C slave)
1 = Indicates that the last byte received is data
0 = Indicates that the last byte received is device address
Hardware cleared at device address match. Hardware set by reception of slave byte.

bit 4 **P:** Stop bit
1 = Indicates that a Stop bit is detected last
0 = Stop bit is not detected last
Hardware set or cleared when start, repeated start or stop detected.

bit 3 **S:** Start bit
1 = Indicates that a start (or repeated start) bit is detected last
0 = Start bit is not detected last
Hardware set or cleared when start, repeated start or stop detected.

bit 2 **R_W:** Read/Write Information bit (when operating as I²C slave)
1 = Read – indicates data transfer is output from slave
0 = Write – indicates data transfer is input to slave
Hardware set or cleared after reception of I²C device address byte.

bit 1 **RBF:** Receive Buffer Full Status bit
1 = Receive complete, I2CxRCV is full
0 = Receive not complete, I2CxRCV is empty
Hardware set when I2CxRCV is written with received byte. Hardware cleared when software reads I2CxRCV.

bit 0 **TBF:** Transmit Buffer Full Status bit
1 = Transmit in progress, I2CxTRN is full
0 = Transmit complete, I2CxTRN is empty
Hardware set when software writes I2CxTRN. Hardware cleared at completion of data transmission.

 © 2020 Microchip Technology Inc.

To compute the Baud Rate Generator (BRG) reload value, use the formula in Equation 23-1:

EQUATION 23-1: BRG RELOAD VALUE CALCULATION

$$I2CxBRG = \left[\left(\frac{1}{(2.F_{SCK})} - T_{PGD}\right) \cdot PBCLK\right] - 2$$

TABLE 23-4: I^2C CLOCK RATE WITH BRG

PBCLK (MHz)	I2CxBRG	PGD(1) (ns)	Approximate F_{SCK} (two rollovers of BFG) (kHz)
50	0x037	104	400
50	0x0F3	104	100
40	0X02C	104	400
40	0X0C2	104	100
30	0X020	104	400
30	0X091	104	100
20	0X015	104	400
20	0X060	104	100
10	0X009	104	400
10	0X02F	104	100

Note 1: The typical value of the Pulse Gobbler Delay (PGD) is 104 ns. Refer to the I2Cx Bus Data Timing Requirements in Table 40-28 and Table 40-29 for more information.

Note: Equation 23-1 and Table 23-4 are provided as design guidelines. Due to system-dependent parameters, the actual baud rate may differ slightly. Testing is required to confirm that the actual baud rate meets the system requirements. Otherwise, the value of the I2CxBRG register may need to be adjusted.

 © 2020 Microchip Technology Inc.

24.0 UART

Note: This data sheet summarizes the features of the PIC32MZ W1 family of devices. It is not intended to be a comprehensive reference source. To complement the information in this data sheet, refer to **Section 21. "UART"** (DS60001107) in the *"PIC32 Family Reference Manual"*, which is available from the Microchip web site (www.microchip.com/PIC32).

The Universal Asynchronous Receiver Transmitter (UART) module is one of the serial I/O modules available in the PIC32MZ W1 family of devices. The UART is a full-duplex, asynchronous communication channel that communicates with peripheral devices and personal computers through protocols, such as RS-232, RS-485, LIN, and IrDA®. The module also supports the hardware flow control option, with UxCTS and UxRTS pins, and also includes an IrDA encoder and decoder.

The device has three UART modules (UART1-3). UART1 supports high-speed operation up to 10 Mbps on non-PPS pins. On PPS pins UART (1-3) speed is limited to 5 Mbps. All three UARTs are capable of 2-pin (UxTX, UxRX) or 4-pin (UxRX, UxTX, UxRTS, UxCTS) operation.

To enable High-speed mode on UART1, CFGCON1.HSUARTEN register bit needs to be set. UART2 and UART3 are only available through PPS pads (I/O remap), therefore can achieve up to 5 Mbps speed.

The primary features of the UART module are:

- Full-duplex, 8-bit or 9-bit data transmission
- Even, odd or no parity options (for 8-bit data)
- One or two stop bits
- Hardware flow control option with $\overline{CTS}$ and $\overline{RTS}$ pins
- Fully integrated baud rate generator with 16-bit prescaler
- Supports Up to 10 Mbps

  Note: Baud clock of 160 MHz is required to obtain 10 Mbps speed.
- Four clock source inputs, asynchronous clocking
- 8-character deep transmit data buffer
- 8-character deep receive data buffer
- Parity, framing and buffer overrun error detection
- IrDA encoder and decoder logic
- 16x baud clock output for IrDA support
- Support for interrupt on address detect

FIGURE 24-1: UART SIMPLIFIED BLOCK DIAGRAM

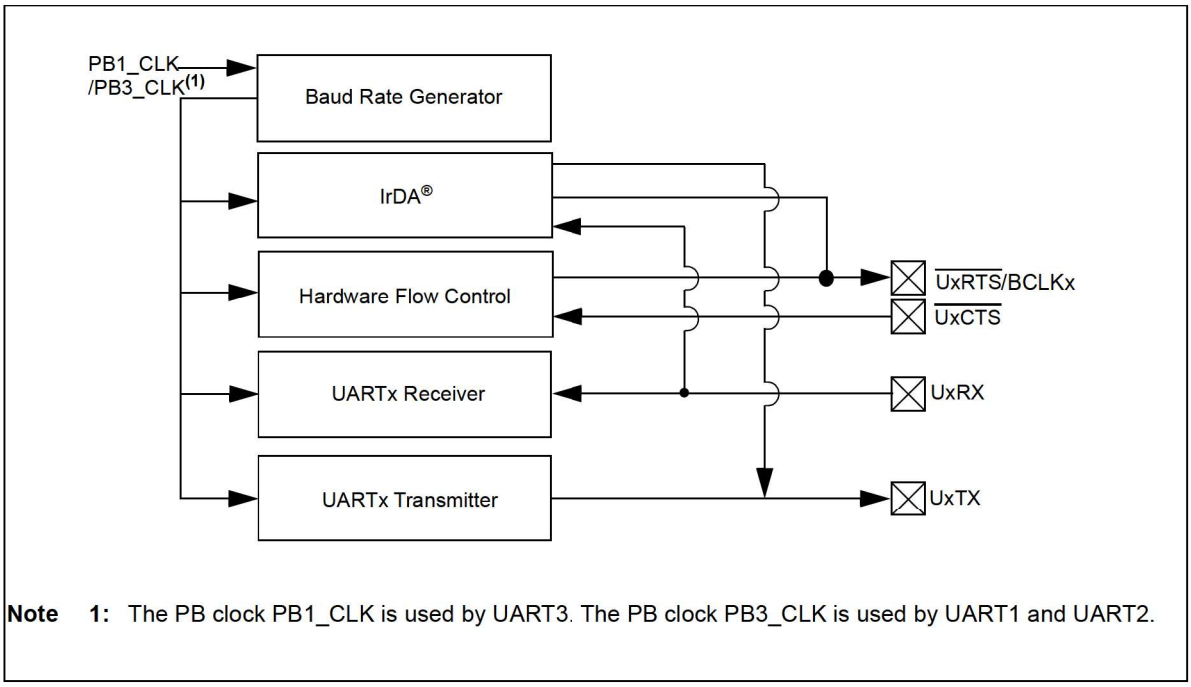

Note 1: The PB clock PB1_CLK is used by UART3. The PB clock PB3_CLK is used by UART1 and UART2.

24.1 UART Control Registers

TABLE 24-1: UART1 THROUGH UART3 REGISTER MAP

Virtual Address (BF84_#)	Register Name	Bit Range	Bits																All Resets
			31/15	30/14	29/13	28/12	27/11	26/10	25/9	24/8	23/7	22/6	21/5	20/4	19/3	18/2	17/1	16/0	
0600	U1MODE(1)	31:16	—	—	—	—	—	—	—	—	SLPEN	ACTIVE	—	—	—	CLK_SEL<1:0>		OVFDIS	0000
		15:0	ON	—	SIDL	IREN	RTSMD	—	UEN<1:0>		WAKE	LPBACK	ABAUD	RXINV	BRGH	PDSEL<1:0>		STSEL	0000
0610	U1STA(1)	31:16	MASK<7:0>								ADDR<7:0>								0000
		15:0	UTXISEL<1:0>		UTXINV	URXEN	UTXBRK	UTXEN	UTXBF	TRMT	URXISEL<1:0>		ADDEN	RIDLE	PERR	FERR	OERR	URXDA	0110
0620	U1TXREG	31:16	—	—	—	—	—	—	—	—	—	—	—	—	—	—	—	—	0000
		15:0	—	—	—	—	—	—	—	U1TXREG<7:0>									0000
0630	U1RXREG	31:16	—	—	—	—	—	—	—	—	—	—	—	—	—	—	—	—	0000
		15:0	—	—	—	—	—	—	—	U1RXREG<7:0>									0000
0640	U1BRG	31:16	—	—	—	—	—	—	—	—	—	—	—	—	U1BRG<19:16>				0000
		15:0	U1BRG<15:0>																0000
0800	U2MODE(1)	31:16	—	—	—	—	—	—	—	—	SLPEN	ACTIVE	—	—	—	CLK_SEL<1:0>		OVFDIS	0000
		15:0	ON	—	SIDL	IREN	RTSMD	—	UEN<1:0>		WAKE	LPBACK	ABAUD	RXINV	BRGH	PDSEL<1:0>		STSEL	0000
0810	U2STA(1)	31:16	MASK<7:0>								ADDR<7:0>								0000
		15:0	UTXISEL<1:0>		UTXINV	URXEN	UTXBRK	UTXEN	UTXBF	TRMT	URXISEL<1:0>		ADDEN	RIDLE	PERR	FERR	OERR	URXDA	0110
0820	U2TXREG	31:16	—	—	—	—	—	—	—	—	—	—	—	—	—	—	—	—	0000
		15:0	—	—	—	—	—	—	—	U2TXREG<7:0>									0000
0830	U2RXREG	31:16	—	—	—	—	—	—	—	—	—	—	—	—	—	—	—	—	0000
		15:0	—	—	—	—	—	—	—	U2RXREG<7:0>									0000
0840	U2BRG	31:16	—	—	—	—	—	—	—	—	—	—	—	—	U2BRG<19:16>				0000
		15:0	U2BRG<15:0>																0000
1600	U3MODE(1)	31:16	—	—	—	—	—	—	—	—	SLPEN	ACTIVE	—	—	—	CLK_SEL<1:0>		OVFDIS	0000
		15:0	ON	—	SIDL	IREN	RTSMD	—	UEN<1:0>		WAKE	LPBACK	ABAUD	RXINV	BRGH	PDSEL<1:0>		STSEL	0000
1610	U3STA(1)	31:16	MASK<7:0>								ADDR<7:0>								0000
		15:0	UTXISEL<1:0>		UTXINV	URXEN	UTXBRK	UTXEN	UTXBF	TRMT	URXISEL<1:0>		ADDEN	RIDLE	PERR	FERR	OERR	URXDA	0110
1620	U3TXREG	31:16	—	—	—	—	—	—	—	—	—	—	—	—	—	—	—	—	0000
		15:0	—	—	—	—	—	—	—	U3TXREG<7:0>									0000
1630	U3RXREG	31:16	—	—	—	—	—	—	—	—	—	—	—	—	—	—	—	—	0000
		15:0	—	—	—	—	—	—	—	U3RXREG<7:0>									0000
1640	U3BRG	31:16	—	—	—	—	—	—	—	—	—	—	—	—	U3BRG<19:16>				0000
		15:0	U3BRG<15:0>																0000

Legend: x = unknown value on Reset; — = unimplemented, read as '0'. Reset values are shown in hexadecimal.

Note 1: This register has corresponding CLR, SET and INV registers at its virtual address, plus an offset of 0x4, 0x8 and 0xC, respectively. See **Section 13.3 "CLR, SET, and INV Registers"** for more information.

© 2020 Microchip Technology Inc.

REGISTER 24-1: UxMODE: UARTx MODE REGISTER

Bit Range	Bit 31/23/15/7	Bit 30/22/14/6	Bit 29/21/13/5	Bit 28/20/12/4	Bit 27/19/11/3	Bit 26/18/10/2	Bit 25/17/9/1	Bit 24/16/8/0
31:24	U-0	U-0	U-0	U-0	U-0	U-0	U-0	U-0
	—	—	—	—	—	—	—	—
23:16	R/W-0	R-0 HS/HC	U-0	U-0	U-0	U-0	U-0	R/W-0
	SLPEN	ACTIVE	—	—	—	CLK_SEL<1:0>		OVFDIS
15:8	R/W-0	U-0	R/W-0	R/W-0	R/W-0	U-0	R/W-0	R/W-0
	ON	—	SIDL	IREN	RTSMD	—	UEN<1:0>(1)	
7:0	R/W-0 HC	R/W-0	R/W-0 HC	R/W-0	R/W-0	R/W-0	R/W-0	R/W-0
	WAKE	LPBACK	ABAUD	RXINV	BRGH	PDSEL[1:0]		STSEL

Legend:		
R = Readable bit	W = Writable bit	U = Unimplemented bit, read as '0'
-n = Value at POR	'1' = Bit is set at Reset	'0' = Bit is cleared at Reset
HC = Hardware Cleared	HS = Hardware Set	x = Bit is unknown at Reset

Example: R/W - 0 indicates the bit is both readable and writable, and reads '0' after a Reset.

bit 31-24 **Unimplemented:** Read as '0'

bit 23 **SLPEN:** Run during Sleep Enable bit
1 = UART BRG clock runs during Sleep mode
0 = UART BRG clock is turned off during Sleep mode

Note: This assumes that the UART is not driven by system clock that is turned off during sleep.

bit 22 **ACTIVE:** UART Running Status bit
1 = UART clock request is active
0 = UART clock request is not active

bit 21-19 **Unimplemented:** Read as '0'

bit 18-17 **CLK_SEL:** UARTx Baud Clock Selection bits
11 = UART BRG clock is the external REFO1 clock.
10 = UART BRG clock is the external FRC clock.
01 = UART BRG clock is the external SYS clock.
00 = UART BRG clock is the internal UPBM clock

Note 1: These bits can only be changed when UxMODE.ON = 0.

2: A clock frequency of 160 MHz is required for obtaining 10 Mbps speed.

bit 16 **OVFDIS:** Run during Overflow Condition Mode bit
1 = When OERR is detected, shift register continues to run to remain synchronized
0 = When OERR is detected, shift register stops accepting new data

bit 15 **ON:** UARTx Enable bit
1 = UARTx is enabled; UARTx pins are controlled by UARTx as defined by UEN<1:0> and UTXEN control bits.
0 = UARTx is disabled; all UARTx pins are controlled by corresponding bits in the control bits PORTx, TRISx and LATx registers; UARTx power consumption is minimal.

bit 14 **Unimplemented:** Read as '0'

bit 13 **SIDL:** Stop in Idle Mode bit
1 = Discontinue module operation when device enters Idle mode
0 = Continue module operation in Idle mode

Note 1: These bits are present for legacy compatibility, and are superseded by PPS functionality on these devices. For additional information, see **Section 13.4 "Peripheral Pin Select (PPS)"**.

REGISTER 24-1: UxMODE: UARTx MODE REGISTER (CONTINUED)

bit 12 **IREN:** IrDA Encoder and Decoder Enable bit
1 = IrDA enabled
0 = IrDA disabled

Note: This feature is only available for Standard mode (UxMODE.BRGH = '0').

bit 11 **RTSMD:** Mode Selection for UxRTS Pin bit
1 = UxRTS pin in Simplex mode
0 = UxRTS pin in Flow Control mode

bit 10 **Unimplemented:** Read as '0'

bit 9-8 **UEN<1:0>:** UARTx Enable bits(1)
11 = UxTX, UxRX and UxBCLK pins are enabled and used; UxCTS pin is controlled by corresponding bits in the PORTx register
10 = UxTX, UxRX, UxCTS and UxRTS pins are enabled and used
01 = UxTX, UxRX and UxRTS pins are enabled and used; UxCTS pin is controlled by corresponding bits in the PORTx register
00 = UxTX and UxRX pins are enabled and used; UxCTS and UxRTS/UxBCLK pins are controlled by corresponding bits in the PORTx register

bit 7 **WAKE:** Enable Wake-up on Start bit Detect During Sleep Mode bit
1 = Wake-up is enabled
0 = Wake-up is disabled

Note: Hardware clear has priority over software.

bit 6 **LPBACK:** UARTx Loopback Mode Enable bit
1 = Enabled
0 = Disabled

bit 5 **ABAUD:** Auto Baud Enable bit
1 = Enable baud rate measurement on the next character – requires reception of a SYNCH field (55h); cleared in hardware upon completion
0 = Baud rate measurement disabled or completed

bit 4 **RXINV:** Receive Polarity Inversion bit
1 = RX Idle state is '0'
0 = RX Idle state is '1'

bit 3 **BRGH:** High Baud Rate Enable bit
1 = UxBRG generates 4 shift clocks per bit period (4x baud clock, High-speed mode)
0 = UxBRG generates 16 shift clocks per bit period (16x baud clock, Standard mode)

bit 2-1 **PDSEL<1:0>:** Parity and Data Selection bits
11 = 9-bit data, no parity
10 = 8-bit data, odd parity
01 = 8-bit data, even parity
00 = 8-bit data, no parity

bit 0 **STSEL:** Stop Selection bit
1 = 2 Stop bits
0 = 1 Stop bit

Note 1: These bits are present for legacy compatibility, and are superseded by PPS functionality on these devices. For additional information, see **Section 13.4 "Peripheral Pin Select (PPS)"**.

 © 2020 Microchip Technology Inc.

REGISTER 24-2: UxSTA: UARTx STATUS AND CONTROL REGISTER

Bit Range	Bit 31/23/15/7	Bit 30/22/14/6	Bit 29/21/13/5	Bit 28/20/12/4	Bit 27/19/11/3	Bit 26/18/10/2	Bit 25/17/9/1	Bit 24/16/8/0
31:24	R/W-0	R/W-0	R/W-0	R/W-0	R/W-0	R/W-0	R/W-0	R/W-0
	MASK<7:0>							
23:16	R/W-0	R/W-0	R/W-0	R/W-0	R/W-0	R/W-0	R/W-0	R/W-0
	ADDR<7:0>							
15:8	R/W-0	R/W-0	R/W-0	R/W-0	R/W-0 HC	R/W-0	R-0	R-1
	UTXISEL<1:0>		UTXINV	URXEN(1)	UTXBRK	UTXEN	UTXBF	TRMT
7:0	R/W-0	R/W-0	R/W-0	R-1	R-0	R-0	R/C-0	R-0
	URXISEL<1:0>		ADDEN	RIDLE	PERR	FERR	OERR	URXDA

Legend:		
R = Readable bit	W = Writable bit	U = Unimplemented bit, read as '0'
-n = Value at POR	'1' = Bit is set at Reset	'0' = Bit is cleared at Reset
HC = Hardware Cleared	HS = Hardware Set	x = Bit is unknown at Reset

Example: R/W - 0 indicates the bit is both readable and writable, and reads '0' after a Reset.

bit 31-24 **MASK<7:0>:** Address Match Mask bits
Used to mask the UxSTAT.ADM_ADDR[7:0] bits.
For ADM_MASK[n]:
1 = ADM_ADDR[n] is used to detect the address match
0 = ADM_ADDR[n] is not used to detect the address match

bit 23-16 **ADDR<7:0>:** Address Detect Task Offload bits
Used with UxSTAT.ADM_EN to offload the task of detecting the address character from the processor during Address Detect mode.

bit 15-14 **UTXISEL<1:0>:** Transmission Interrupt Mode Selection bits
11 = Reserved, do not use
10 = Interrupt is persistent when the transmit buffer is empty
(The Transmit Shift register may or may not be empty.)
01 = Interrupt is persistent when both the transmit buffer and Transmit Shift register are empty
(This indicates that all characters have been transmitted).
00 = Interrupt is persistent when the transmit buffer is not full
(This means there is space for at least one character in the transmit buffer).

bit 13 **UTXINV:** Transmit Polarity Inversion bit
If UxMODE.IREN = 0:
1 = TX Idle state is '0'
0 = TX Idle state is '1'
If UxMODE.IREN = 1:
1 = IrDA encoded TX Idle state is '1'
0 = IrDA encoded TX Idle state is '0'

bit 12 **URXEN:** Receive Enable bit(1)
1 = Receive enabled, characters seen on the RX pin and captured by the UARTx
0 = Receive disabled, the RX pin is ignored by the UARTx. RX pin is controlled by PORT.

bit 11 **UTXBRK:** Transmit Break bit
1 = Send SYNCH BREAK on next transmission – Start bit, followed by twelve '0' bits, followed by Stop bit; cleared by hardware upon completion
0 = SYNCH BREAK transmission disabled or completed

bit 10 **UTXEN:** Transmit Enable bit
1 = UARTx transmitter is enabled. UxTX pin is controlled by UARTx (if ON = 1)
0 = UARTx transmitter is disabled. Any pending transmission is aborted and buffer is reset

REGISTER 24-2: UxSTA: UARTx STATUS AND CONTROL REGISTER (CONTINUED)

bit 9 **UTXBF:** Transmit Buffer Full Status bit
1 = Transmit buffer is full
0 = Transmit buffer is not full, at least one more character can be written

bit 8 **TRMT:** Transmit Shift Register Empty bit
1 = Transmit shift register is empty and transmit buffer is empty (The last transmission has completed)
0 = Transmit shift register is not empty, a transmission is in progress or queued

bit 7-6 **URXISEL<1:0>:** Receive Interrupt Mode Selection bit
11 = Reserved, do not use
10 = Interrupt is persistent when the receive buffer has 6 or more data characters
01 = Interrupt is persistent when the receive buffer has 4 or more data characters
00 = Interrupt is persistent when the receive buffer has 1 or more data characters (in other words, not empty)

bit 5 **ADDEN:** Address Character Detect bit (Bit 8 of received data = 1)
1 = Address Detect mode is enabled. If 9-bit mode is not selected, this control bit has no effect.
0 = Address Detect mode is disabled

bit 4 **RIDLE:** Receiver Idle bit
1 = Receiver is idle
0 = Receiver is active

bit 3 **PERR:** Parity Error Status bit
1 = Parity error has been detected for the current character (Character at the top of the receive FIFO)
0 = Parity error has not been detected

bit 2 **FERR:** Framing Error Status bit
1 = Framing error has been detected for the current character (Character at the top of the receive FIFO)
0 = Framing error has not been detected

bit 1 **OERR:** Receive Buffer Overrun Error Status bit
1 = Receive buffer has overflowed
0 = Receive buffer has not overflowed

Note 1: When RUNOVF = 0, clearing a previously set OERR bit (1 ? 0 transition) resets the receiver buffer and the RSR to the empty state.

2: When RUNOVF = 1, clearing a previously set OERR bit (1 ? 0 transition) does not reset the receive buffer or RSR.

bit 0 **URXDA:** Receive Buffer Data Available bit
1 = Receive buffer has data, at least one more character can be read
0 = Receive buffer is empty

Note 1: Clearing UxSTAT.RXEN will not reset the receive buffer. Clearing UxMODE.ON will reset the receive buffer.

 © 2020 Microchip Technology Inc.

24.2 Receive and Transmit Timing for UART Module

Figure 24-2 and Figure 24-3 illustrate the typical receive and transmit timing for the UART module.

FIGURE 24-2: UART RECEPTION

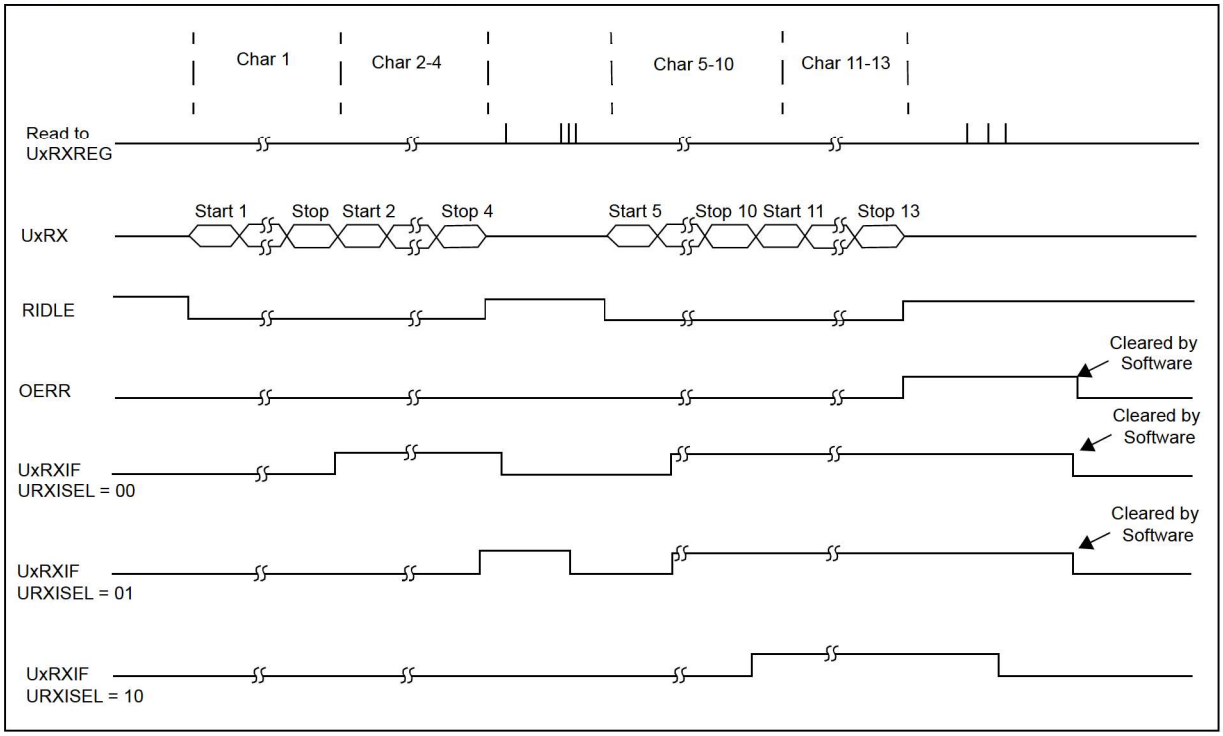

FIGURE 24-3: UART TRANSMISSION (8-BIT OR 9-BIT DATA)

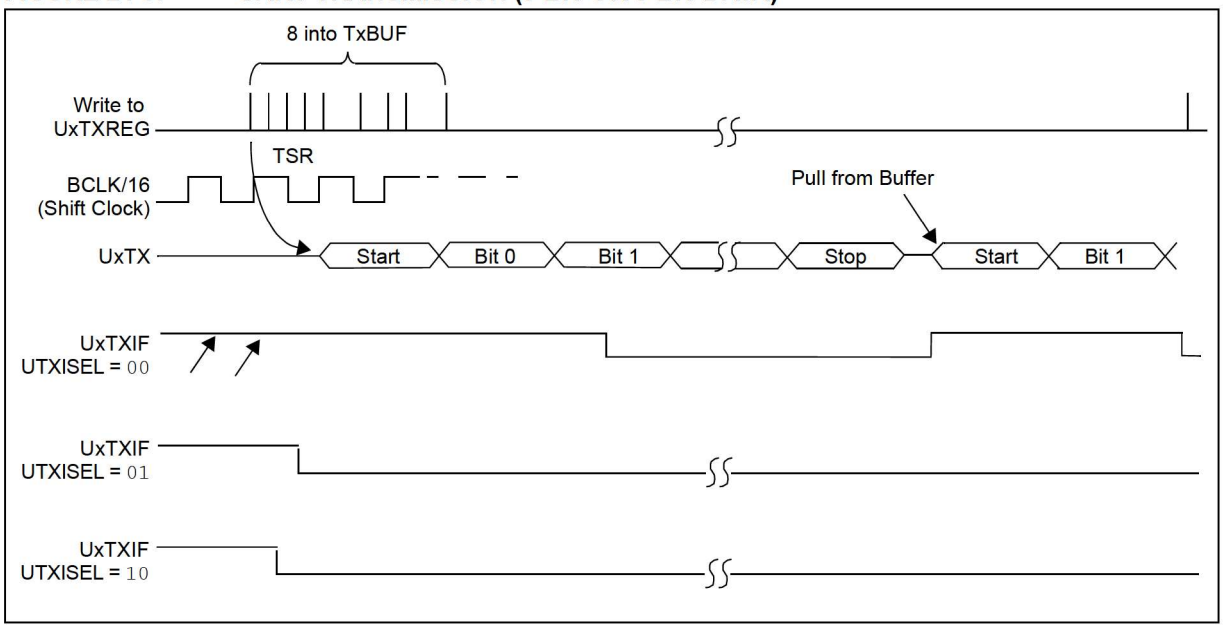

 © 2020 Microchip Technology Inc.

25.0 REAL-TIME CLOCK AND CALENDAR (RTCC)

Note: This data sheet summarizes the features of the PIC32MZ W1 family of devices. It is not intended to be a comprehensive reference source. To complement the information in this data sheet, refer to **Section 29. "Real-Time Clock and Calendar (RTCC)"** (DS60001125) in the *"PIC32 Family Reference Manual"*, which is available from the Microchip web site (www.microchip.com/PIC32).

The RTCC module is intended for applications in which accurate time must be maintained for extended periods of time with minimal or no CPU intervention. Low-power optimization provides extended battery lifetime while keeping track of time.

The following are key features of the RTCC module:

- Time: hours, minutes, and seconds
- 24-hour format (military time)
- Visibility of one-half second period
- Provides calendar: weekday, date, month, and year
- Alarm intervals are configurable for half of a second, one second, 10 seconds, one minute, 10 minutes, one hour, one day, one week, one month, and one year.
- Alarm repeat with decrementing counter
- Alarm with indefinite repeat: Chime
- Year range: 2000-2099
- Leap year correction
- BCD format for smaller firmware overhead
- Optimized for long-term battery operation
- Fractional second synchronization
- User calibration of the clock frequency with periodic auto-adjust
- Calibration within ±2.64 seconds error per month
- Calibrates up to 260 ppm of crystal error
- Uses external 32.768 kHz crystal or 32.768 kHz internal oscillator
- Alarm pulse or seconds clock output on RTCC pin

The RTCC reference clock is obtained from either the SOSC or LPRC oscillator. The user is responsible to enable the oscillator using the OSCCON[SOSCEN] bit if the SOSC is used.

FIGURE 25-1: RTCC BLOCK DIAGRAM

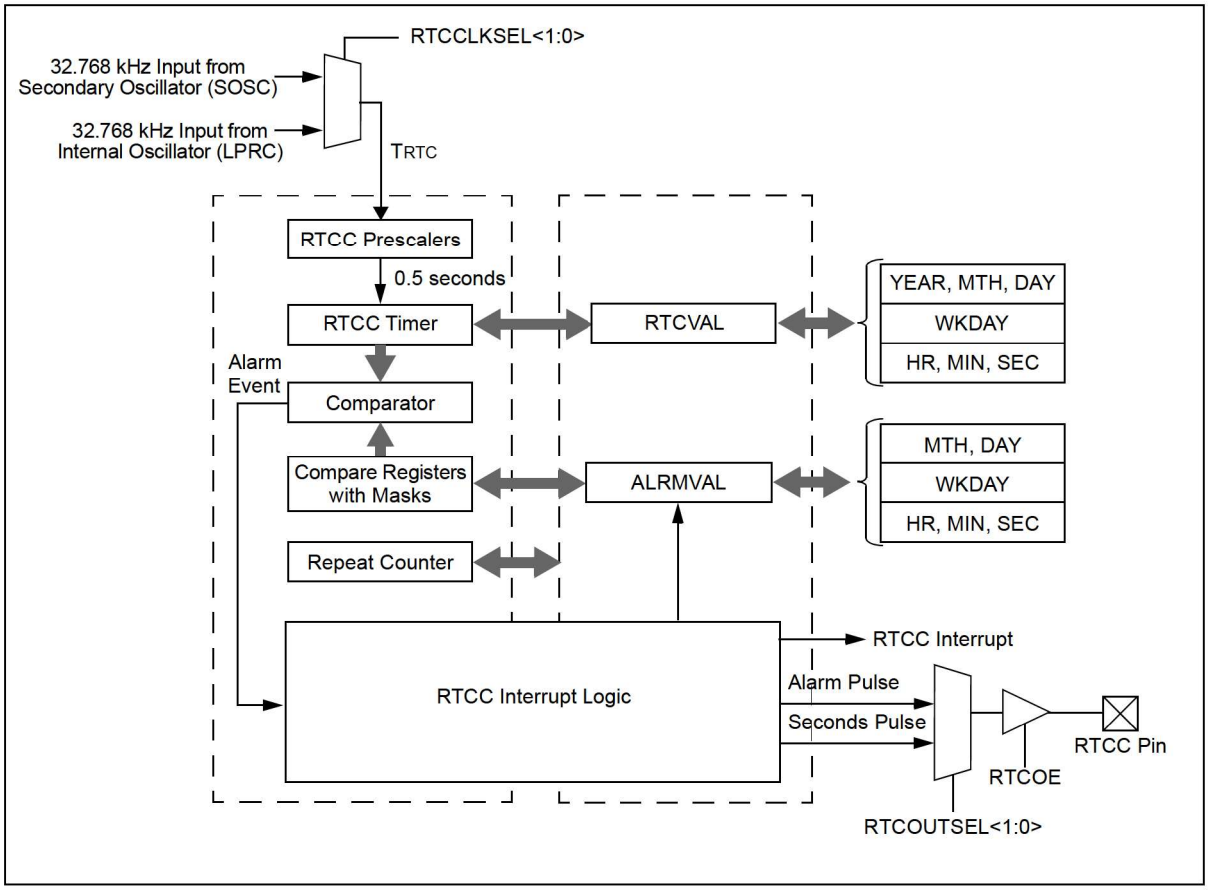

25.1 RTCC Control Registers

TABLE 25-1: RTCC REGISTER MAP

Virtual Address (BF87_#)	Register Name(1)	Bit Range	Bits															All Resets
			31/15	30/14	29/13	28/12	27/11	26/10	25/9	24/8	23/7	22/6	21/5	20/4	19/3	18/2	17/1	16/0	
0000	RTCCON	31:16	—	—	—	—	—	—	CAL<9:0>										0000
		15:0	ON	—	SIDL	—	—	RTCCLKSEL<1:0>		RTCOUTSEL<1:0>		RTCCLKON	—	—	RTCWREN	RTCSYNC	HALFSEC	RTCOE	0000
0010	RTCALRM	31:16	—	—	—	—	—	—	—	—	—	—	—	—	—	—	—	—	0000
		15:0	ALRMEN	CHIME	PIV	ALRMSYNC	AMASK<3:0>				ARPT<7:0>								0000
0020	RTCTIME	31:16	HR10<3:0>				HR01<3:0>				MIN10<3:0>				MIN01<3:0>				xxxx
		15:0	SEC10<3:0>				SEC01<3:0>				—	—	—	—	—	—	—	—	xx00
0030	RTCDATE	31:16	YEAR10<3:0>				YEAR01<3:0>				MONTH10<3:0>				MONTH01<3:0>				xxxx
		15:0	DAY10<3:0>				DAY01<3:0>				—	—	—	—	WDAY01<3:0>				xx00
0040	ALRMTIME	31:16	HR10<3:0>				HR01<3:0>				MIN10<3:0>				MIN01<3:0>				xxxx
		15:0	SEC10<3:0>				SEC01<3:0>				—	—	—	—	—	—	—	—	xx00
0050	ALRMDATE	31:16	—	—	—	—	—	—	—	—	MONTH10<3:0>				MONTH01<3:0>				00xx
		15:0	DAY10<3:0>				DAY01<3:0>				—	—	—	—	WDAY01<3:0>				xx0x

Legend: x = unknown value on Reset; — = unimplemented, read as '0'. Reset values are shown in hexadecimal.

Note 1: All registers in this table have corresponding CLR, SET and INV registers at its virtual address, plus an offset of 0x4, 0x8 and 0xC, respectively. See **Section 13.3 "CLR, SET, and INV Registers"** for more information.

© 2020 Microchip Technology Inc.

REGISTER 25-1: RTCCON: REAL-TIME CLOCK AND CALENDAR CONTROL REGISTER

Bit Range	Bit 31/23/15/7	Bit 30/22/14/6	Bit 29/21/13/5	Bit 28/20/12/4	Bit 27/19/11/3	Bit 26/18/10/2	Bit 25/17/9/1	Bit 24/16/8/0
31:24	U-0	U-0	U-0	U-0	U-0	U-0	R/W-0	R/W-0
	—	—	—	—	—	—	CAL<9:8>	
23:16	R/W-0	R/W-0	R/W-0	R/W-0	R/W-0	R/W-0	R/W-0	R/W-0
	CAL<7:0>							
15:8	R/W-0	U-0	R/W-0	U-0	U-0	R/W-0	R/W-0	R/W-0
	ON(1)	—	SIDL	—	—	RTCCLKSEL<1:0>		RTCOUTSEL<1>(2)
7:0	R/W-0	R-0	U-0	U-0	R/W-0	R-0	R-0	R/W-0
	RTCOUTSEL<0>(2)	RTCCLKON(5)	—	—	RTCWREN(3)	RTCSYNC	HALFSEC(4)	RTCOE

Legend:			
R = Readable bit	W = Writable bit	U = Unimplemented bit, read as '0'	
-n = Value at POR	'1' = Bit is set	'0' = Bit is cleared	x = Bit is unknown

bit 31-26 **Unimplemented:** Read as '0'

bit 25-16 **CAL<9:0>:** Real-Time Clock Drift Calibration bits, which contain a signed 10-bit integer value

0111111111 = Maximum positive adjustment, adds 511 real-time clock pulses every one minute
•
•
•
0000000001 = Minimum positive adjustment, adds 1 real-time clock pulse every one minute
0000000000 = No adjustment
1111111111 = Minimum negative adjustment, subtracts 1 real-time clock pulse every one minute
•
•
•
1000000000 = Maximum negative adjustment, subtracts 512 real-time clock pulses every one minute

bit 15 **ON:** RTCC On bit(1)

1 = RTCC module is enabled
0 = RTCC module is disabled

bit 14 **Unimplemented:** Read as '0'

bit 13 **SIDL:** Stop in Idle Mode bit

1 = Disables RTCC operation when CPU enters Idle mode
0 = Continue normal operation when CPU enters Idle mode

bit 12-11 **Unimplemented:** Read as '0'

bit 10-9 **RTCCLKSEL<1:0>:** RTCC Clock Select bits

When a new value is written to these bits, the Seconds Value register should also be written to properly reset the clock prescalers in the RTCC.
11 = Reserved
10 = Reserved
01 = RTCC uses the external 32.768 kHz SOSC
00 = RTCC uses the internal 32.768 kHz LPRC

Note 1: The ON bit is only writable when RTCWREN = 1.
2: Requires RTCOE = 1 (RTCCON<0>) for the output to be active.
3: The RTCWREN bit can be set only when the Write sequence is enabled.
4: This bit is read-only. It is cleared to '0' on a write to the seconds bit fields (RTCTIME<14:8>).
5: This bit is undefined when RTCCLKSEL<1:0> = 00 (LPRC is the clock source).
6: This register is reset only on a POR.

REGISTER 25-1: RTCCON: REAL-TIME CLOCK AND CALENDAR CONTROL REGISTER (CONTINUED)

bit 8-7 **RTCOUTSEL<1:0>:** RTCC Output Data Select bits(2)
- 11 = Reserved
- 10 = Reserved
- 01 = Seconds Clock is presented on the RTCC pin
- 00 = Alarm Pulse is presented on the RTCC pin when the alarm interrupt is triggered

bit 6 **RTCCLKON:** RTCC Clock Enable Status bit(5)
- 1 = RTCC Clock is actively running
- 0 = RTCC Clock is not running

bit 5-4 **Unimplemented:** Read as '0'

bit 3 **RTCWREN:** Real-Time Clock Value Registers Write Enable bit(3)
- 1 = Real-Time Clock Value registers can be written to by the user
- 0 = Real-Time Clock Value registers are locked out from being written to by the user

bit 2 **RTCSYNC:** Real-Time Clock Value Registers Read Synchronization bit
- 1 = Real-time clock value registers can change while reading (due to a rollover ripple that results in an invalid data read). If the register is read twice and results in the same data, the data can be assumed to be valid.
- 0 = Real-time clock value registers can be read without concern about a rollover ripple

bit 1 **HALFSEC:** Half-Second Status bit(4)
- 1 = Second half period of a second
- 0 = First half period of a second

bit 0 **RTCOE:** RTCC Output Enable bit
- 1 = RTCC output is enabled
- 0 = RTCC output is disabled

Note 1: The ON bit is only writable when RTCWREN = 1.
2: Requires RTCOE = 1 (RTCCON<0>) for the output to be active.
3: The RTCWREN bit can be set only when the Write sequence is enabled.
4: This bit is read-only. It is cleared to '0' on a write to the seconds bit fields (RTCTIME<14:8>).
5: This bit is undefined when RTCCLKSEL<1:0> = 00 (LPRC is the clock source).
6: This register is reset only on a POR.

 © 2020 Microchip Technology Inc.

REGISTER 25-2: RTCALRM: REAL-TIME CLOCK ALARM CONTROL REGISTER

Bit Range	Bit 31/23/15/7	Bit 30/22/14/6	Bit 29/21/13/5	Bit 28/20/12/4	Bit 27/19/11/3	Bit 26/18/10/2	Bit 25/17/9/1	Bit 24/16/8/0
31:24	U-0	U-0	U-0	U-0	U-0	U-0	U-0	U-0
	—	—	—	—	—	—	—	—
23:16	U-0	U-0	U-0	U-0	U-0	U-0	U-0	U-0
	—	—	—	—	—	—	—	—
15:8	R/W-0	R/W-0	R/W-0	R-0	R/W-0	R/W-0	R/W-0	R/W-0
	ALRMEN(1,2)	CHIME(2)	PIV(2)	ALRMSYNC	AMASK<3:0>(2)			
7:0	R/W-0	R/W-0	R/W-0	R/W-0	R/W-0	R/W-0	R/W-0	R/W-0
	ARPT<7:0>(2)							

Legend:			
R = Readable bit	W = Writable bit	U = Unimplemented bit, read as '0'	
-n = Value at POR	'1' = Bit is set	'0' = Bit is cleared	x = Bit is unknown

bit 31-16 **Unimplemented:** Read as '0'

bit 15 **ALRMEN:** Alarm Enable bit(1,2)

1 = Alarm is enabled
0 = Alarm is disabled

bit 14 **CHIME:** Chime Enable bit(2)

1 = Chime is enabled – ARPT<7:0> is allowed to rollover from 0x00 to 0xFF
0 = Chime is disabled – ARPT<7:0> stops once it reaches 0x00

bit 13 **PIV:** Alarm Pulse Initial Value bit(2)

When ALRMEN = 0, PIV is writable and determines the initial value of the Alarm Pulse.
When ALRMEN = 1, PIV is read-only and returns the state of the Alarm Pulse.

bit 12 **ALRMSYNC:** Alarm Sync bit

1 = ARPT<7:0> and ALRMEN may change as a result of a half second rollover during a read. The ARPT must be read repeatedly until the same value is read twice. This must be done since multiple bits may be changing.
0 = ARPT<7:0> and ALRMEN can be read without concerns of rollover because the prescaler is more than 32 real-time clocks away from a half-second rollover

bit 11-8 **AMASK<3:0>:** Alarm Mask Configuration bits(2)

0000 = Every half-second
0001 = Every second
0010 = Every 10 seconds
0011 = Every minute
0100 = Every 10 minutes
0101 = Every hour
0110 = Once a day
0111 = Once a week
1000 = Once a month
1001 = Once a year (except when configured for February 29, once every four years)
1010 = Reserved
1011 = Reserved
11xx = Reserved

Note 1: Hardware clears the ALRMEN bit anytime the alarm event occurs, when ARPT<7:0> = 00 and CHIME = 0.

2: This field should not be written when the RTCC ON bit = '1' (RTCCON<15>) and ALRMSYNC = 1.

3: This register is reset only on a POR.

REGISTER 25-2: RTCALRM: REAL-TIME CLOCK ALARM CONTROL REGISTER (CONTINUED)

bit 7-0 **ARPT<7:0>:** Alarm Repeat Counter Value bits(2)

11111111 = Alarm will trigger 256 times

•

•

•

00000000 = Alarm will trigger one time

The counter decrements on any alarm event. The counter only rolls over from 0x00 to 0xFF if CHIME = 1.

Note 1: Hardware clears the ALRMEN bit anytime the alarm event occurs, when ARPT<7:0> = 00 and CHIME = 0.

2: This field should not be written when the RTCC ON bit = '1' (RTCCON<15>) and ALRMSYNC = 1.

3: This register is reset only on a POR.

 © 2020 Microchip Technology Inc.

REGISTER 25-3: RTCTIME: REAL-TIME CLOCK TIME VALUE REGISTER

Bit Range	Bit 31/23/15/7	Bit 30/22/14/6	Bit 29/21/13/5	Bit 28/20/12/4	Bit 27/19/11/3	Bit 26/18/10/2	Bit 25/17/9/1	Bit 24/16/8/0
31:24	R/W-x	R/W-x	R/W-x	R/W-x	R/W-x	R/W-x	R/W-x	R/W-x
	HR10<3:0>				HR01<3:0>			
23:16	R/W-x	R/W-x	R/W-x	R/W-x	R/W-x	R/W-x	R/W-x	R/W-x
	MIN10<3:0>				MIN01<3:0>			
15:8	R/W-x	R/W-x	R/W-x	R/W-x	R/W-x	R/W-x	R/W-x	R/W-x
	SEC10<3:0>				SEC01<3:0>			
7:0	U-0	U-0	U-0	U-0	U-0	U-0	U-0	U-0
	—	—	—	—	—	—	—	—

Legend:			
R = Readable bit	W = Writable bit	U = Unimplemented bit, read as '0'	
-n = Value at POR	'1' = Bit is set	'0' = Bit is cleared	x = Bit is unknown

bit 31-28 **HR10<3:0>:** Binary-Coded Decimal Value of Hours bits, 10 digits; contains a value from 0 to 2

bit 27-24 **HR01<3:0>:** Binary-Coded Decimal Value of Hours bits, 1 digit; contains a value from 0 to 9

bit 23-20 **MIN10<3:0>:** Binary-Coded Decimal Value of Minutes bits, 10 digits; contains a value from 0 to 5

bit 19-16 **MIN01<3:0>:** Binary-Coded Decimal Value of Minutes bits, 1 digit; contains a value from 0 to 9

bit 15-12 **SEC10<3:0>:** Binary-Coded Decimal Value of Seconds bits, 10 digits; contains a value from 0 to 5

bit 11-8 **SEC01<3:0>:** Binary-Coded Decimal Value of Seconds bits, 1 digit; contains a value from 0 to 9

bit 7-0 **Unimplemented:** Read as '0'

Note: This register is only writable when RTCWREN = 1 (RTCCON<3>).

REGISTER 25-4: RTCDATE: REAL-TIME CLOCK DATE VALUE REGISTER

Bit Range	Bit 31/23/15/7	Bit 30/22/14/6	Bit 29/21/13/5	Bit 28/20/12/4	Bit 27/19/11/3	Bit 26/18/10/2	Bit 25/17/9/1	Bit 24/16/8/0
31:24	R/W-x	R/W-x	R/W-x	R/W-x	R/W-x	R/W-x	R/W-x	R/W-x
	YEAR10<3:0>				YEAR01<3:0>			
23:16	R/W-x	R/W-x	R/W-x	R/W-x	R/W-x	R/W-x	R/W-x	R/W-x
	MONTH10<3:0>				MONTH01<3:0>			
15:8	R/W-x	R/W-x	R/W-x	R/W-x	R/W-x	R/W-x	R/W-x	R/W-x
	DAY10<3:0>				DAY01<3:0>			
7:0	U-0	U-0	U-0	U-0	R/W-x	R/W-x	R/W-x	R/W-x
	—	—	—	—	WDAY01<3:0>			

Legend:			
R = Readable bit	W = Writable bit	U = Unimplemented bit, read as '0'	
-n = Value at POR	'1' = Bit is set	'0' = Bit is cleared	x = Bit is unknown

bit 31-28 **YEAR10<3:0>:** Binary-Coded Decimal Value of Years bits, 10 digits

bit 27-24 **YEAR01<3:0>:** Binary-Coded Decimal Value of Years bits, 1 digit

bit 23-20 **MONTH10<3:0>:** Binary-Coded Decimal Value of Months bits, 10 digits; contains a value from 0 to 1

bit 19-16 **MONTH01<3:0>:** Binary-Coded Decimal Value of Months bits, 1 digit; contains a value from 0 to 9

bit 15-12 **DAY10<3:0>:** Binary-Coded Decimal Value of Days bits, 10 digits; contains a value from 0 to 3

bit 11-8 **DAY01<3:0>:** Binary-Coded Decimal Value of Days bits, 1 digit; contains a value from 0 to 9

bit 7-4 **Unimplemented:** Read as '0'

bit 3-0 **WDAY01<3:0>:** Binary-Coded Decimal Value of Weekdays bits,1 digit; contains a value from 0 to 6

Note: This register is only writable when RTCWREN = 1 (RTCCON<3>).

 © 2020 Microchip Technology Inc.

REGISTER 25-5: ALRMTIME: ALARM TIME VALUE REGISTER

Bit Range	Bit 31/23/15/7	Bit 30/22/14/6	Bit 29/21/13/5	Bit 28/20/12/4	Bit 27/19/11/3	Bit 26/18/10/2	Bit 25/17/9/1	Bit 24/16/8/0
31:24	R/W-x	R/W-x	R/W-x	R/W-x	R/W-x	R/W-x	R/W-x	R/W-x
	HR10<3:0>				HR01<3:0>			
23:16	R/W-x	R/W-x	R/W-x	R/W-x	R/W-x	R/W-x	R/W-x	R/W-x
	MIN10<3:0>				MIN01<3:0>			
15:8	R/W-x	R/W-x	R/W-x	R/W-x	R/W-x	R/W-x	R/W-x	R/W-x
	SEC10<3:0>				SEC01<3:0>			
7:0	U-0	U-0	U-0	U-0	U-0	U-0	U-0	U-0
	—	—	—	—	—	—	—	—

Legend:			
R = Readable bit	W = Writable bit	U = Unimplemented bit, read as '0'	
-n = Value at POR	'1' = Bit is set	'0' = Bit is cleared	x = Bit is unknown

bit 31-28 **HR10<3:0>:** Binary Coded Decimal value of hours bits, 10 digits; contains a value from 0 to 2

bit 27-24 **HR01<3:0>:** Binary Coded Decimal value of hours bits, 1 digit; contains a value from 0 to 9

bit 23-20 **MIN10<3:0>:** Binary Coded Decimal value of minutes bits, 10 digits; contains a value from 0 to 5

bit 19-16 **MIN01<3:0>:** Binary Coded Decimal value of minutes bits, 1 digit; contains a value from 0 to 9

bit 15-12 **SEC10<3:0>:** Binary Coded Decimal value of seconds bits, 10 digits; contains a value from 0 to 5

bit 11-8 **SEC01<3:0>:** Binary Coded Decimal value of seconds bits, 1 digit; contains a value from 0 to 9

bit 7-0 **Unimplemented:** Read as '0'

REGISTER 25-6: ALRMDATE: ALARM DATE VALUE REGISTER

Bit Range	Bit 31/23/15/7	Bit 30/22/14/6	Bit 29/21/13/5	Bit 28/20/12/4	Bit 27/19/11/3	Bit 26/18/10/2	Bit 25/17/9/1	Bit 24/16/8/0
31:24	U-0	U-0	U-0	U-0	U-0	U-0	U-0	U-0
	—	—	—	—	—	—	—	—
23:16	R/W-x	R/W-x	R/W-x	R/W-x	R/W-x	R/W-x	R/W-x	R/W-x
	MONTH10<3:0>				MONTH01<3:0>			
15:8	R/W-x	R/W-x	R/W-x	R/W-x	R/W-x	R/W-x	R/W-x	R/W-x
	DAY10<1:0>				DAY01<3:0>			
7:0	U-0	U-0	U-0	U-0	R/W-x	R/W-x	R/W-x	R/W-x
	—	—	—	—	WDAY01<3:0>			

Legend:			
R = Readable bit	W = Writable bit	U = Unimplemented bit, read as '0'	
-n = Value at POR	'1' = Bit is set	'0' = Bit is cleared	x = Bit is unknown

bit 31-24 **Unimplemented:** Read as '0'

bit 23-20 **MONTH10<3:0>:** Binary Coded Decimal value of months bits, 10 digits; contains a value from 0 to 1

bit 19-16 **MONTH01<3:0>:** Binary Coded Decimal value of months bits, 1 digit; contains a value from 0 to 9

bit 15-12 **DAY10<3:0>:** Binary Coded Decimal value of days bits, 10 digits; contains a value from 0 to 3

bit 11-8 **DAY01<3:0>:** Binary Coded Decimal value of days bits, 1 digit; contains a value from 0 to 9

bit 7-4 **Unimplemented:** Read as '0'

bit 3-0 **WDAY01<3:0>:** Binary Coded Decimal value of weekdays bits, 1 digit; contains a value from 0 to 6

 © 2020 Microchip Technology Inc.

26.0 ASYMMETRIC CRYPTO ENGINE

The Asymmetric Crypto Engine provides hardware acceleration to support Public Key (PK) cryptography functions, needed during authentication and key negotiation sessions. The PK Crypto Engine is based on a scalable array of dual-field processing elements that can be used to execute all operations and algorithms required for PK crypto-systems.

The Asymmetric Crypto Engine supports the following:

- Algorithms
  - 256/512-bit crypto engines
    - Elliptic-curve cryptography (ECC)
    - Elliptic-curve Diffie–Hellman (ECDH)
    - Elliptic Curve Digital Signature Algorithm (ECDSA)
  - 256-bit Ed25519
- Applications:
  - Digital signature applications
  - Digital right management
  - Key exchange protocol
  - IPSec - Internet Key Exchange (IKE)
  - Transport Layer Security/Secure Sockets Layer (TLS/SSL) gateways

The following are key features of the Asymmetric Crypto Engine:

- Supports microcode based sequence
- Dedicated DMA for write back from crypto memory to shared memory
- Flexible microcode update using the crypto engine SRAM

The asymmetric crypto module interfaces with three memory modules as shown in Table 26-1.

TABLE 26-1: ASYMMETRIC CRYPTO MEMORIES

Memory	Size
Shared Crypto RAM (SCM)	304 (Words) x 64 (Bits)
Microcode memory	1440 (Words) x 18 (Bits)
Tightly coupled memory	256 (Words) x 64 (Bits)

FIGURE 26-1: ASYMMETRIC CRYPTO ENGINE BLOCK DIAGRAM

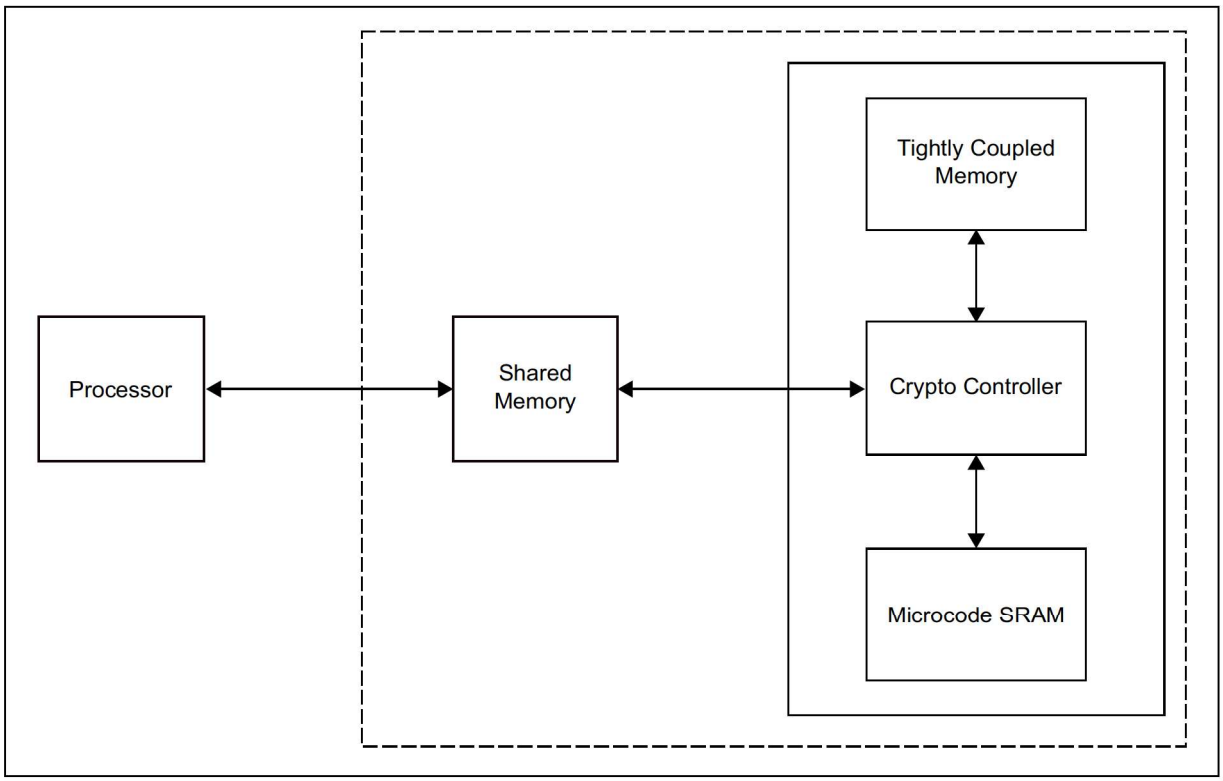

26.1 Asymmetric Crypto Engine Control Registers

TABLE 26-2: ASYMMETRIC CRYPTO ENGINE REGISTER MAP

Virtual Address (BF92_#)	Register Name	Bit Range	Bits															All Resets
			31/15	30/14	29/13	28/12	27/11	26/10	25/9	24/8	23/7	22/6	21/5	20/4	19/3	18/2	17/1	16/0	
0000	PKCONFIG	31:16	—	—	—	—	—	—	—	—	—	—	—	OPPTRC<4:0>					0000
		15:0	—	—	—	OPPTRB<4:0>					—	—	—	OPPTRA<4:0>					0000
0004	PKCOMMAND	31:16	CALCR2	SIGNB	SIGNA	—	—	—	—	—	—	—	—	—	—	—	—	—	0000
		15:0	OPSIZE<7:0>								FIELD	OPERATION<6:0>							0000
0008	PKCONTROL	31:16	—	—	—	—	—	—	—	—	—	—	—	—	—	—	—	—	0000
		15:0	—	—	—	—	—	—	—	—	—	—	—	—	—	—	—	START	0000
000C	PKSTATUS	31:16	—	—	—	—	—	—	—	—	—	—	—	—	—	—	—	BUSY	0000
		15:0	—	—	—	PRIME	NONINV	PABINVAL	SIGINVAL	—	PNINVAL	CPLINVAL	PXINF	PXNOC	EADDR<3:0>				0000
0010	PKVERSION	31:16	—	—	—	—	—	—	—	—	—	—	—	—	—	—	—	—	0000
		15:0	HWVER<7:0>								SWVER<7:0>								0000

Legend: x = unknown value on Reset; — = unimplemented, read as '0'. Reset values are shown in hexadecimal.

© 2020 Microchip Technology Inc.

REGISTER 26-1: PKCONFIG: PUBLIC KEY CRYPTO ENGINE CONFIGURATION REGISTER

Bit Range	Bit 31/23/15/7	Bit 30/22/14/6	Bit 29/21/13/5	Bit 28/20/12/4	Bit 27/19/11/3	Bit 26/18/10/2	Bit 25/17/9/1	Bit 24/16/8/0
31:24	U-0	U-0	U-0	U-0	U-0	U-0	U-0	U-0
	—	—	—	—	—	—	—	—
23:16	U-0	U-0	U-0	R/W-0	R/W-0	R/W-0	R/W-0	R/W-0
	—	—	—	OPPTRC<4:0>(1,2)				
15:8	U-0	U-0	U-0	R/W-0	R/W-0	R/W-0	R/W-0	R/W-0
	—	—	—	OPPTRB<4:0>(1,2)				
7:0	U-0	U-0	U-0	R/W-0	R/W-0	R/W-0	R/W-0	R/W-0
	—	—	—	OPPTRA<4:0>(1,2)				

Legend:			
R = Readable bit	W = Writable bit	U = Unimplemented bit, read as '0'	
-n = Value at POR	'1' = Bit is set	'0' = Bit is cleared	x = Bit is unknown

bit 31-21 **Unimplemented:** Read as '0'

bit 20-16 **OPPTRC<4:0>:** Operand Pointer C(1,2)
When executing primitive arithmetic operations, this pointer defines the location where the result is stored in memory.

bit 15-13 **Unimplemented:** Read as '0'

bit 12-8 **OPPTRB<4:0>:** Operand Pointer B(1,2)
When executing primitive arithmetic operations, this pointer defines where operand B is located in memory.

bit 7-5 **Unimplemented:** Read as '0'

bit 4-0 **OPPTRA<4:0>:** Operand Pointer A(1,2)
When executing primitive arithmetic operations, this pointer defines where operand A is located in memory.

Note 1: When executing primitive arithmetic operations, pointers define locations where operands and results are stored in the shared crypto memory. Even locations only can be accessed with pointers.
Relationship between pointers and location numbers:
OpPtr[4:0] = LocationNumber[4:0]
Depending on the operand size, pointers are mapped to corresponding addresses:
OpPtr[4:0] = A[9:5] in 256-bit configuration
OpPtr[4:0] = A[10:6] in 512-bit configuration
OpPtr[4:0] = A[11:7] in 1024-bit configuration
OpPtr[4:0] = A[12:8] in 2048-bit configuration
OpPtr[4:0] = A[13:9] in 4096-bit configuration

2: DH supports only up to 512-bit configuration.

REGISTER 26-2: PKCOMMAND: PUBLIC KEY CRYPTO ENGINE COMMAND REGISTER

Bit Range	Bit 31/23/15/7	Bit 30/22/14/6	Bit 29/21/13/5	Bit 28/20/12/4	Bit 27/19/11/3	Bit 26/18/10/2	Bit 25/17/9/1	Bit 24/16/8/0
31:24	R/W-0	R/W-0	R/W-0	U-0	U-0	U-0	U-0	U-0
	CALCR2	SIGNB	SIGNA	—	—	—	—	—
23:16	U-0	U-0	U-0	U-0	U-0	U-0	U-0	U-0
	—	—	—	—	—	—	—	—
15:8	R/W-0	R/W-0	R/W-0	R/W-0	R/W-0	R/W-0	R/W-0	R/W-0
	OPSIZE<7:0>							
7:0	R/W-0	R/W-0	R/W-0	R/W-0	R/W-0	R/W-0	R/W-0	R/W-0
	FIELD	OPERATION<6:0>						

Legend:			
R = Readable bit	W = Writable bit	U = Unimplemented bit, read as '0'	
-n = Value at POR	'1' = Bit is set	'0' = Bit is cleared	x = Bit is unknown

bit 31 **CALCR2:**
This bit indicates if the module has to calculate R^2 mod N for the next operation. This bit must be set to '1' when a new prime number has been programmed. This bit is automatically cleared when R^2 mod N has been calculated.
1 = Forces the module to re-calculate R^2 mod N
0 = No effect

bit 30 **SIGNB:** Sign of parameter B in equation y2 = x3+Ax+B
1 = B is negative
0 = B is positive

bit 29 **SIGNA:** Sign of parameter A in equation y2 = x3+Ax+B
1 = A is negative
0 = A is positive

bit 28-16 **Unimplemented:** Read as '0'

 © 2020 Microchip Technology Inc.

REGISTER 26-2: PKCOMMAND: PUBLIC KEY CRYPTO ENGINE COMMAND REGISTER (CONTINUED)

bit 15-8 **OPSIZE<7:0>:** Size of operands in shared crypto memory

This field defines the size (= number of 64-bit double words) of the operands for the current operation. Possible values are limited by the maximum supported operand size.
Arbitrary data/key size from 128 up to 4096 are supported:
0x02 (02d) ? 128-bit Data/Key size
.
.
.
0x40 (64d) ? 4096-bit Data/Key size

RSA-DSA:
- 0x10 ? 1024-bit RSA-DSA
- 0x20 ? 2048-bit RSA-DSA
- 0x40 ? 4096-bit RSA-DSA

ECC-ECDSA - Prime Field F(p)
- 0x04 ? 256-bit (Curves P-192, P-224 and P-256)
- 0x06 ? 384-bit (Curve P-384)
- 0x0A ? 640-bit (Curve P-521)

ECC-ECDSA - Binary Field F(2m)
- 0x04 ? 256-bit (Curve K-163 and K-233)
- 0x06 ? 384-bit (Curve K-283)
- 0x08 ? 512-bit (Curve K-409)
- 0x0A ? 640-bit (Curve K-571)

Curve25519-Ed25519:
- 0x04 ? 256-bit

Note: Depending on the configuration, the following sizes are supported:
- 4 Xers: 0x01, 0x02, 0x4, 0x6… ? 64, 128 and multiples of 128 bits
- 16 Xers: 0x01, 0x02, 0x4, 0x8… ? 64, 128, 256 and multiples of 256 bits
- 64 Xers: 0x02, 0x04, 0x8, 0x10… ? 128, 256, 512 and multiples of 512 bits
- 256 Xers: 0x04, 0x08, 0x10, 0x20… ? 256, 512, 1024 and multiples of 1024 bits, except 256 bits

exponentiation based operations (RSA, CRT, DSA, RM and Ed25519) which are not supported

bit 7 **FIELD:**

0 = Field is F(p)
1 = Field is F(2m)

REGISTER 26-2: PKCOMMAND: PUBLIC KEY CRYPTO ENGINE COMMAND REGISTER (CONTINUED)

bit 6-0 **OPERATION<6:0>:**

Primitive Arithmetic Operations F(p) and F(2m)
[6:4] = 0x0
[3:0] =
0x0 ? Reserved
0x1 ? Modular Addition C = A + B mod N
0x2 ? Modular Subtraction C = A - B mod N
0x3 ? Modular Multiplication (Odd N) C = A * B mod N
0x4 ? Modular Reduction (Odd N) C = B mod N
0x5 ? Modular Division (Odd N) C = A/B mod N
0x6 ? Modular Inversion (Odd N) C = 1/B mod N
0x7 ? Reserved
0x8 ? Multiplication (F(p) only) C = A * B
0x9 ? Modular Inversion (Even N and F(p) only)) C = 1/B mod N

0xA ? Modular Reduction (Even N and F(p) only)
others ? Reserved
C = B mod N
High-level RSA, CRT and DSA Operations - F(p) only
([7] forced to '0')
[6:4] = 0x1
[3:0] =
0x0 ? Modular Exponentiation (C=A^B mod N)
0x1 ? Private Key Generation
0x2 ? CRT - Key Parameter Generation
0x3 ? CRT - Decryption
0x4 ? RSA - Encryption
0x5 ? RSA - Decryption
0x6 ? RSA - Signature Generation
0x7 ? RSA - Signature Verification
0x8 ? DSA - Key Gen
0x9 ? DSA - Signature Generation
0xA ? DSA - Signature Verification
0xC ? SRP - Client session key generation
others ? Reserved

 © 2020 Microchip Technology Inc.

REGISTER 26-2: PKCOMMAND: PUBLIC KEY CRYPTO ENGINE COMMAND REGISTER (CONTINUED)

Primitive ECC and Check Point Operations F(p) and F(2m)
[6:4] = 0x2
[3:0] =
0x0 ? Point Doubling (Projective coordinates)
0x1 ? Point Addition (Projective coordinates)
0x2 ? Point Multiplication (Projective coordinates)
0x3 ? Check_AB (ECDSA)
0x4 ? Check_n (ECDSA)
0x5 ? Check_Couple_Less_Prime (ECDSA)
0x6 ? Check_Point_On_Curve
0x7 ? Reserved
0x8 ? Curve25519 Point Multiplication
0x9 ? Ed25519 Xrecover
0xA ? Ed25519 ScalarMult
0xB ? Ed25519 CheckValid
0xC ? Check_Point_On_Curve Ed25519
others ? Reserved

High-level ECC - ECDSA Operations F(p) and F(2m)
[6:4] = 0x3
[3:0] =
High-level ECC - ECDSA Operations F(p) and F(2m)
[6:4] = 0x3
[3:0] =
0x0 ? ECDSA - Signature Generation
0x1 ? ECDSA - Signature Verification
0x2 ? ECDSA - Domain Parameters Validation
0x3 ? EC-KCDSA - Public Key Generation
0x4 ? EC-KCDSA - Signature Generation
0x5 ? EC-KCDSA - Signature Verification
others ? Reserved
[6:4] = 0x4,0x5, 0x6, 0x7 ? Reserved

REGISTER 26-3: PKCONTROL: PUBLIC KEY CRYPTO ENGINE CONTROL REGISTER

Bit Range	Bit 31/23/15/7	Bit 30/22/14/6	Bit 29/21/13/5	Bit 28/20/12/4	Bit 27/19/11/3	Bit 26/18/10/2	Bit 25/17/9/1	Bit 24/16/8/0
31:24	U-0	U-0	U-0	U-0	U-0	U-0	U-0	U-0
	—	—	—	—	—	—	—	—
23:16	U-0	U-0	U-0	U-0	U-0	U-0	U-0	U-0
	—	—	—	—	—	—	—	—
15:8	U-0	U-0	U-0	U-0	U-0	U-0	U-0	U-0
	—	—	—	—	—	—	—	—
7:0	U-0	U-0	U-0	U-0	U-0	U-0	U-0	R-0
	—	—	—	—	—	—	—	START

Legend:			
R = Readable bit	W = Writable bit	U = Unimplemented bit, read as '0'	
-n = Value at POR	'1' = Bit is set	'0' = Bit is cleared	x = Bit is unknown

bit 31-1 **Unimplemented:** Read as '0'

bit 0 **START:**

The START signal is activated when all data and key inputs have been loaded in the external Shared Crypto Memory and are available for processing. This signal is active high and is sampled on the rising edge of clock. When this signal goes high, the PK Command present in the PKCOMMAND register is initiated and executed. The START signal is ignored when the core is already processing data and is automatically cleared when the operation is finished.

 © 2020 Microchip Technology Inc.

REGISTER 26-4: PKSTATUS: PUBLIC KEY CRYPTO ENGINE STATUS REGISTER

Bit Range	Bit 31/23/15/7	Bit 30/22/14/6	Bit 29/21/13/5	Bit 28/20/12/4	Bit 27/19/11/3	Bit 26/18/10/2	Bit 25/17/9/1	Bit 24/16/8/0
31:24	U-0	U-0	U-0	U-0	U-0	U-0	U-0	U-0
	—	—	—	—	—	—	—	—
23:16	U-0	U-0	U-0	U-0	U-0	U-0	U-0	R-0
	—	—	—	—	—	—	—	BUSY
15:8	U-0	U-0	U-0	R-0	R-0	R-0	R-0	U-0
	—	—	—	PRIME	NONINV	PABINVAL	SIGINVAL	—
7:0	R/W-0	R/W-0	R/W-0	R/W-0	R/W-0	R/W-0	R/W-0	R/W-0
	PNINVAL	CPLINVAL	PXINF	PXNOC	EADDR<3:0>			

Legend:			
R = Readable bit	W = Writable bit	U = Unimplemented bit, read as '0'	
-n = Value at POR	'1' = Bit is set	'0' = Bit is cleared	x = Bit is unknown

bit 31-17 **Unimplemented:** Read as '0'

bit 16 **BUSY:** This status signal indicates that the core is processing data. This signal is active high and goes low when the This status signal indicates that the core is processing data. This signal is active high and goes low when the selected algorithm is finished.

bit 15-13 **Unimplemented:** Read as '0'

bit 12 **PRIME:** Primality Test Result bit

After the Miller-Rabin primality test, this flag is:

- Set to '0' when the random number under test is probably prime
- Cleared to '1' when the random number under test is composite

bit 11 **NONINV:** Not Invertible bit

This flag is set to '1' when executing a modular inversion (PKCOMMAND[3:0] = 0x6 or 0x9) if the operand is not invertible.

bit 10 **PABINVAL:** Status signal set to '1' when parameters A and B are not valid, i.e $4A^3 + 27B^2 = 0$. This flag is updated after execution of the `Check_AB` command.

bit 9 **SIGINVAL:** This flag indicates if the signature can be accepted or must be rejected. This flag is set to '1' when the signature is not valid and is updated after execution of the `ECDSA_Generation`, `ECDSA_Verification`, `DSA_Generation`, `DSA_Verification`, and `Ed25519_CheckValid` commands.

bit 8 **Unimplemented:** Read as '0'

bit 7 **PNINVAL:** Status signal set to '1' when Parameter n is not valid. This flag is updated after execution of the `Check_n` command.

bit 6 **CPLINVAL:** Status signal set to '1' when couple x, y is not valid (i.e. not smaller than the prime). This flag is updated after execution of the `Check_Couple_Less_Prime` command.

bit 5 **PXINF:** Status signal set to '1' when Point Px is at the infinity. This flag is updated after execution of an ECC operation.

bit 4 **PXNOC:** Status signal set to '1' when Point Px is not on the defined EC. This flag is updated after execution of the `Check_Point_OnCurve` command.

bit 3-0 **EADDR<3:0>:** Fail Address bits

Address of the last point detected as not on curve, not valid or at the infinity.

REGISTER 26-5: PKVERSION: PUBLIC KEY CRYPTO ENGINE VERSION REGISTER

Bit Range	Bit 31/23/15/7	Bit 30/22/14/6	Bit 29/21/13/5	Bit 28/20/12/4	Bit 27/19/11/3	Bit 26/18/10/2	Bit 25/17/9/1	Bit 24/16/8/0
31:24	U-0	U-0	U-0	U-0	U-0	U-0	U-0	U-0
	—	—	—	—	—	—	—	—
23:16	U-0	U-0	U-0	U-0	U-0	U-0	U-0	U-0
	—	—	—	—	—	—	—	—
15:8	R-0	R-0	R-0	R-0	R-0	R-0	R-0	R-0
	HWVER<15:8>							
7:0	R-0	R-0	R-0	R-0	R-0	R-0	R-0	R-0
	SWVER<7:0>							

Legend:			
R = Readable bit	W = Writable bit	U = Unimplemented bit, read as '0'	
-n = Value at POR	'1' = Bit is set	'0' = Bit is cleared	x = Bit is unknown

bit 31-16 **Unimplemented:** Read as '0'

bit 15-8 **HWVER:** Hardware Version bits
Version of crypto hardware to be read via CPU interface.

bit 7-0 **SWVER:** Software Version bits
Version of Crypto software to be read via CPU interface.

 © 2020 Microchip Technology Inc.

27.0 SYMMETRIC CRYPTO ENGINE

Note: This data sheet summarizes the features of the PIC32MZ W1 family of devices. It is not intended to be a comprehensive reference source. To complement the information in this data sheet, refer to **Section 49. "Crypto Engine (CE) and Random Number Generator (RNG)"** (DS60001246) in the *"PIC32 Family Reference Manual"*, which is available from the Microchip web site (www.microchip.com/PIC32).

The Symmetric Crypto Engine is intended to accelerate applications that need cryptographic functions. By executing these functions in the hardware module, software overhead is reduced and actions, such as encryption, decryption, and authentication can execute much more quickly.

The Symmetric Crypto Engine uses an internal descriptor-based DMA for efficient programming of the Security Association (SA) data and packet pointers (allowing scatter/gather data fetching). An intelligent state machine schedules the Symmetric Crypto Engines based on the protocol selection and packet boundaries. The hardware engines can perform the encryption and authentication in sequence or in parallel.

The following are key features of the Symmetric Crypto Engine:

- Bulk ciphers and hash engines
- Integrated CRDMA to off-load processing:
  - Buffer Descriptor (BD) -based
  - Secure association per buffer descriptor
- Some functions can execute in parallel

Bulk ciphers that are handled by the Symmetric Crypto Engine include:

- AES:
  - 128-bit, 192-bit, and 256-bit key sizes
  - CBC, ECB, CTR, CFB, and OFB modes
- DES/TDES:
  - CBC, ECB, CFB, and OFB modes

Authentication engines that are available through the Symmetric Crypto Engine include:

- SHA-1
- SHA-256
- MD-5
- AES-GCM
- AES-CBC
- HMAC operation (for all authentication engines)
- SFR interface:
  - 32-bit Read/Write only
  - No 8-bit or 16-bit access

The Symmetric Crypto Engine processes the data rate on the basis of the following factors:

- Which algorithm/engine is in use
- Whether the algorithms/engines are used in parallel or in series
- Demand on source and destination memories by other parts of the system (CPU, DMA, and so on.)
- The speed of PB5_CLK, which drives the Symmetric Crypto Engine

Table 27-1 shows typical performance for various engines.

TABLE 27-1: SYMMETRIC CRYPTO ENGINE PERFORMANCE

Engine/ Algorithm	Performance Factor (Mbps/MHz)	Maximum Mbps (PB5_CLK = 100 MHz)
DES	14.4	1440
TDES	6.6	660
AES-128	9.0	900
AES-192	7.9	790
AES-256	7.2	720
MD5	15.6	1560
SHA-1	13.2	1320
SHA-256	9.3	930

Note: When using the engines sequentially, the throughput degrades. Throughput is also negatively affected by other bus activity, specifically if the CPU and/or peripherals have high activity to the same SRAM target as the CRDMA.

FIGURE 27-1: SYMMETRIC CRYPTO ENGINE BLOCK DIAGRAM

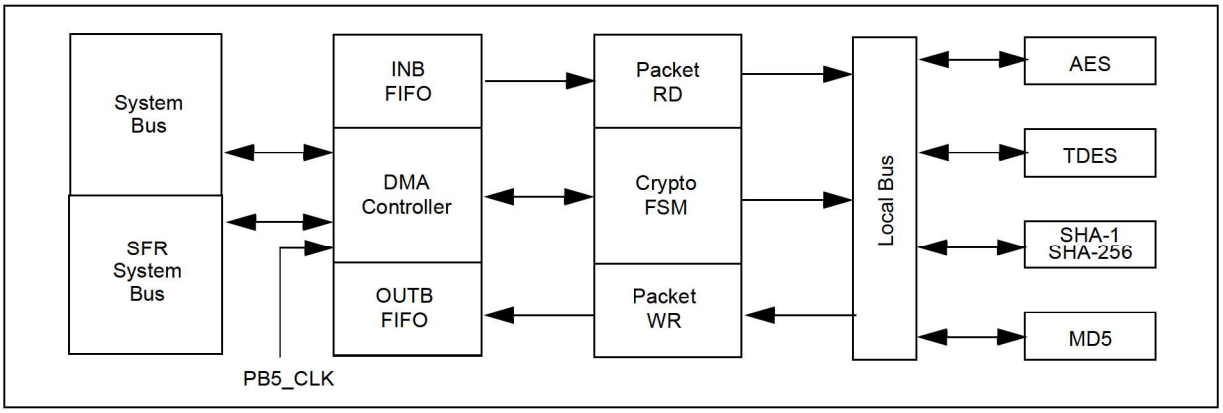

 © 2020 Microchip Technology Inc.

27.1 Symmetric Crypto Engine Control Registers

TABLE 27-2: SYMMETRIC CRYPTO ENGINE REGISTER MAP

Virtual Address (BF8E_#)	Register Name	Bit Range	Bits															All Resets
			31/15	30/14	29/13	28/12	27/11	26/10	25/9	24/8	23/7	22/6	21/5	20/4	19/3	18/2	17/1	16/0	
4000	CEVER	31:16	REVISION<7:0>								VERSION<7:0>								0000
		15:0	ID<15:0>																0000
4004	CECON	31:16	—	—	—	—	—	—	—	—	—	—	—	—	—	—	—	—	0000
		15:0	—	—	—	—	—	—	—	—	SWAPOEN	SWRST	SWAPEN	—	—	BDPCHST	BDPPLEN	DMAEN	0000
4008	CEBDADDR	31:16	BDPADDR<31:16>																0000
		15:0	BDPADDR<15:0>																0000
400C	CEBDPADDR	31:16	BASEADDR<31:16>																0000
		15:0	BASEADDR<15:0>																0000
4010	CESTAT	31:16	ERRMODE<2:0>			ERROP<2:0>			ERRPHASE<1:0>		—	—	BDSTATE<3:0>				START	ACTIVE	0000
		15:0	BDCTRL<15:0>																0000
4014	CEINTSRC	31:16	—	—	—	—	—	—	—	—	—	—	—	—	—	—	—	—	0000
		15:0	—	—	—	—	—	—	—	—	—	—	—	—	AREIF	PKTIF	CBDIF	PENDIF	0000
4018	CEINTEN	31:16	—	—	—	—	—	—	—	—	—	—	—	—	—	—	—	—	0000
		15:0	—	—	—	—	—	—	—	—	—	—	—	—	AREIE	PKTIE	CBDIE	PENDIE	0000
401C	CEPOLLCON	31:16	—	—	—	—	—	—	—	—	—	—	—	—	—	—	—	—	0000
		15:0	BDPPLCON<15:0>																0000
4020	CEHDLEN	31:16	—	—	—	—	—	—	—	—	—	—	—	—	—	—	—	—	0000
		15:0	—	—	—	—	—	—	—	—	HDRLEN<7:0>								0000
4024	CETRLLEN	31:16	—	—	—	—	—	—	—	—	—	—	—	—	—	—	—	—	0000
		15:0	—	—	—	—	—	—	—	—	TRLRLEN<7:0>								0000

Legend: x = unknown value on Reset; — = unimplemented, read as '0'. Reset values are shown in hexadecimal.

© 2020 Microchip Technology Inc.

REGISTER 27-1: CEVER: CRYPTO ENGINE REVISION, VERSION, AND ID REGISTER

Bit Range	Bit 31/23/15/7	Bit 30/22/14/6	Bit 29/21/13/5	Bit 28/20/12/4	Bit 27/19/11/3	Bit 26/18/10/2	Bit 25/17/9/1	Bit 24/16/8/0
31:24	R-0	R-0	R-0	R-0	R-0	R-0	R-0	R-0
	REVISION<7:0>							
23:16	R-0	R-0	R-0	R-0	R-0	R-0	R-0	R-0
	VERSION<7:0>							
15:8	R-0	R-0	R-0	R-0	R-0	R-0	R-0	R-0
	ID<15:8>							
7:0	R-0	R-0	R-0	R-0	R-0	R-0	R-0	R-0
	ID<7:0>							

Legend:			
R = Readable bit	W = Writable bit	U = Unimplemented bit, read as '0'	
-n = Value at POR	'1' = Bit is set	'0' = Bit is cleared	x = Bit is unknown

bit 31-24 **REVISION<7:0>:** Crypto Engine Revision bits

bit 23-16 **VERSION<7:0>:** Crypto Engine Version bits

bit 15-0 **ID<15:0>:** Crypto Engine Identification bits

 © 2020 Microchip Technology Inc.

REGISTER 27-2: CECON: CRYPTO ENGINE CONTROL REGISTER

Bit Range	Bit 31/23/15/7	Bit 30/22/14/6	Bit 29/21/13/5	Bit 28/20/12/4	Bit 27/19/11/3	Bit 26/18/10/2	Bit 25/17/9/1	Bit 24/16/8/0
31:24	U-0	U-0	U-0	U-0	U-0	U-0	U-0	U-0
	—	—	—	—	—	—	—	—
23:16	U-0	U-0	U-0	U-0	U-0	U-0	U-0	U-0
	—	—	—	—	—	—	—	—
15:8	U-0	U-0	U-0	U-0	U-0	U-0	U-0	U-0
	—	—	—	—	—	—	—	—
7:0	R/W-0	R/W-0, HC	R/W-0	U-0	U-0	R/W-0	R/W-0	R/W-0
	SWAPOEN	SWRST	SWAPEN	—	—	BDPCHST	BDPPLEN	DMAEN

Legend:		HC = Hardware Cleared	
R = Readable bit	W = Writable bit	U = Unimplemented bit, read as '0'	
-n = Value at POR	'1' = Bit is set	'0' = Bit is cleared	x = Bit is unknown

bit 31-8 **Unimplemented:** Read as '0'

bit 7 **SWAPOEN:** Swap Output Data Enable bit
- 1 = Output data is byte swapped when written by dedicated DMA
- 0 = Output data is not byte swapped when written by dedicated DMA

bit 6 **SWRST:** Software Reset bit
- 1 = Initiate a software reset of the Crypto Engine
- 0 = Normal operation

bit 5 **SWAPEN:** Input Data Swap Enable bit
- 1 = Input data is byte swapped when read by dedicated DMA
- 0 = Input data is not byte swapped when read by dedicated DMA

bit 4-3 **Unimplemented:** Read as '0'

bit 2 **BDPCHST:** Buffer Descriptor Processor (BDP) Fetch Enable bit

This bit should be enabled only after all DMA descriptor programming is completed.
- 1 = BDP descriptor fetch is enabled
- 0 = BDP descriptor fetch is disabled

bit 1 **BDPPLEN:** Buffer Descriptor Processor Poll Enable bit

This bit should be enabled only after all DMA descriptor programming is completed.
- 1 = Poll for descriptor until valid bit is set
- 0 = Do not poll

bit 0 **DMAEN:** DMA Enable bit
- 1 = Crypto Engine DMA is enabled
- 0 = Crypto Engine DMA is disabled

REGISTER 27-3: CEBDADDR: CRYPTO ENGINE BUFFER DESCRIPTOR REGISTER

Bit Range	Bit 31/23/15/7	Bit 30/22/14/6	Bit 29/21/13/5	Bit 28/20/12/4	Bit 27/19/11/3	Bit 26/18/10/2	Bit 25/17/9/1	Bit 24/16/8/0
31:24	R-0	R-0	R-0	R-0	R-0	R-0	R-0	R-0
	BDPADDR<31:24>							
23:16	R-0	R-0	R-0	R-0	R-0	R-0	R-0	R-0
	BDPADDR<23:16>							
15:8	R-0	R-0	R-0	R-0	R-0	R-0	R-0	R-0
	BDPADDR<15:8>							
7:0	R-0	R-0	R-0	R-0	R-0	R-0	R-0	R-0
	BDPADDR<7:0>							

Legend:			
R = Readable bit	W = Writable bit	U = Unimplemented bit, read as '0'	
-n = Value at POR	'1' = Bit is set	'0' = Bit is cleared	x = Bit is unknown

bit 31-0 **BDPADDR<31:0>:** Current Buffer Descriptor Process Address Status bits
These bits contain the current descriptor address that is being processed by the BDP.

REGISTER 27-4: CEBDPADDR: CRYPTO ENGINE BUFFER DESCRIPTOR PROCESSOR REGISTER

Bit Range	Bit 31/23/15/7	Bit 30/22/14/6	Bit 29/21/13/5	Bit 28/20/12/4	Bit 27/19/11/3	Bit 26/18/10/2	Bit 25/17/9/1	Bit 24/16/8/0
31:24	R/W-0	R/W-0	R/W-0	R/W-0	R/W-0	R/W-0	R/W-0	R/W-0
	BASEADDR<31:24>							
23:16	R/W-0	R/W-0	R/W-0	R/W-0	R/W-0	R/W-0	R/W-0	R/W-0
	BASEADDR<23:16>							
15:8	R/W-0	R/W-0	R/W-0	R/W-0	R/W-0	R/W-0	R/W-0	R/W-0
	BASEADDR<15:8>							
7:0	R/W-0	R/W-0	R/W-0	R/W-0	R/W-0	R/W-0	R/W-0	R/W-0
	BASEADDR<7:0>							

Legend:			
R = Readable bit	W = Writable bit	U = Unimplemented bit, read as '0'	
-n = Value at POR	'1' = Bit is set	'0' = Bit is cleared	x = Bit is unknown

bit 31-0 **BASEADDR<31:0>:** Buffer Descriptor Base Address bits
These bits contain the physical address of the first buffer descriptor in the buffer descriptor chain. When enabled, the Crypto DMA begins fetching buffer descriptors from this address.

 © 2020 Microchip Technology Inc.

REGISTER 27-5: CESTAT: CRYPTO ENGINE STATUS REGISTER

Bit Range	Bit 31/23/15/7	Bit 30/22/14/6	Bit 29/21/13/5	Bit 28/20/12/4	Bit 27/19/11/3	Bit 26/18/10/2	Bit 25/17/9/1	Bit 24/16/8/0
31:24	R-0	R-0	R-0	R-0	R-0	R-0	R-0	R-0
	ERRMODE<2:0>			ERROP<2:0>			ERRPHASE<1:0>	
23:16	U-0	U-0	R-0	R-0	R-0	R-0	R-0	R-0
	—	—	BDSTATE<3:0>				START	ACTIVE
15:8	R-0	R-0	R-0	R-0	R-0	R-0	R-0	R-0
	BDCTRL<15:8>							
7:0	R-0	R-0	R-0	R-0	R-0	R-0	R-0	R-0
	BDCTRL<7:0>							

Legend:			
R = Readable bit	W = Writable bit	U = Unimplemented bit, read as '0'	
-n = Value at POR	'1' = Bit is set	'0' = Bit is cleared	x = Bit is unknown

bit 31-29 **ERRMODE<2:0>:** Internal Error Mode Status bits
- 111 = Reserved
- 110 = Reserved
- 101 = Reserved
- 100 = Reserved
- 011 = CEK operation
- 010 = KEK operation
- 001 = Preboot authentication
- 000 = Normal operation

bit 28-26 **ERROP<2:0>:** Internal Error Operation Status bits
- 111 = Reserved
- 110 = Reserved
- 101 = Reserved
- 100 = Authentication
- 011 = Reserved
- 010 = Decryption
- 001 = Encryption
- 000 = Reserved

bit 25-24 **ERRPHASE<1:0>:** Internal Error Phase of DMA Status bits
- 11 = Destination data
- 10 = Source data
- 01 = Security Association (SA) access
- 00 = Buffer Descriptor (BD) access

bit 23-22 **Unimplemented:** Read as '0'

bit 21-18 **BDSTATE<3:0>:** Buffer Descriptor Processor State Status bits

The current state of the BDP:
- 1111 = Reserved
- •
- •
- •
- 0111 = Reserved
- 0110 = SA fetch
- 0101 = Fetch BDP is disabled
- 0100 = Descriptor is done
- 0011 = Data phase
- 0010 = BDP is loading
- 0001 = Descriptor fetch request is pending
- 0000 = BDP is idle

bit 17 **START:** DMA Start Status bit
- 1 = DMA start has occurred
- 0 = DMA start has not occurred

REGISTER 27-5: CESTAT: CRYPTO ENGINE STATUS REGISTER (CONTINUED)

bit 16 **ACTIVE:** Buffer Descriptor Processor Status bit
1 = BDP is active
0 = BDP is idle

bit 15-0 **BDCTRL<15:0>:** Descriptor Control Word Status bits
These bits contain the Control Word for the current BD.

 © 2020 Microchip Technology Inc.

REGISTER 27-6: CEINTSRC: CRYPTO ENGINE INTERRUPT SOURCE REGISTER

Bit Range	Bit 31/23/15/7	Bit 30/22/14/6	Bit 29/21/13/5	Bit 28/20/12/4	Bit 27/19/11/3	Bit 26/18/10/2	Bit 25/17/9/1	Bit 24/16/8/0
31:24	U-0	U-0	U-0	U-0	U-0	U-0	U-0	U-0
	—	—	—	—	—	—	—	—
23:16	U-0	U-0	U-0	U-0	U-0	U-0	U-0	U-0
	—	—	—	—	—	—	—	—
15:8	U-0	U-0	U-0	U-0	U-0	U-0	U-0	U-0
	—	—	—	—	—	—	—	—
7:0	U-0	U-0	U-0	U-0	R-0	R-0	R-0	R-0
	—	—	—	—	AREIF	PKTIF	CBDIF	PENDIF

Legend:			
R = Readable bit	W = Writable bit	U = Unimplemented bit, read as '0'	
-n = Value at POR	'1' = Bit is set	'0' = Bit is cleared	x = Bit is unknown

bit 31-4 **Unimplemented:** Read as '0'

bit 3 **AREIF:** Access Response Error Interrupt bit
- 1 = Error occurred trying to access memory outside the Crypto Engine
- 0 = No error has occurred

bit 2 **PKTIF:** DMA Packet Completion Interrupt Status bit
- 1 = DMA packet was completed
- 0 = DMA packet was not completed

bit 1 **CBDIF:** BD Transmit Status bit
- 1 = Last BD transmit was processed
- 0 = Last BD transmit has not been processed

bit 0 **PENDIF:** Crypto Engine Interrupt Pending Status bit
- 1 = Crypto Engine interrupt is pending (this value is the result of an OR of all interrupts in the Crypto Engine)
- 0 = Crypto Engine interrupt is not pending

REGISTER 27-7: CEINTEN: CRYPTO ENGINE INTERRUPT ENABLE REGISTER

Bit Range	Bit 31/23/15/7	Bit 30/22/14/6	Bit 29/21/13/5	Bit 28/20/12/4	Bit 27/19/11/3	Bit 26/18/10/2	Bit 25/17/9/1	Bit 24/16/8/0
31:24	U-0	U-0	U-0	U-0	U-0	U-0	U-0	U-0
	—	—	—	—	—	—	—	—
23:16	U-0	U-0	U-0	U-0	U-0	U-0	U-0	U-0
	—	—	—	—	—	—	—	—
15:8	U-0	U-0	U-0	U-0	U-0	U-0	U-0	U-0
	—	—	—	—	—	—	—	—
7:0	U-0	U-0	U-0	U-0	R/W-0	R/W-0	R/W-0	R/W-0
	—	—	—	—	AREIE	PKTIE	BDPIE	PENDIE(1)

Legend:			
R = Readable bit	W = Writable bit	U = Unimplemented bit, read as '0'	
-n = Value at POR	'1' = Bit is set	'0' = Bit is cleared	x = Bit is unknown

bit 31-4 **Unimplemented:** Read as '0'

bit 3 **AREIE:** Access Response Error Interrupt Enable bit
- 1 = Access response error interrupts are enabled
- 0 = Access response error interrupts are not enabled

bit 2 **PKTIE:** DMA Packet Completion Interrupt Enable bit
- 1 = DMA packet completion interrupts are enabled
- 0 = DMA packet completion interrupts are not enabled

bit 1 **BDPIE:** DMA Buffer Descriptor Processor Interrupt Enable bit
- 1 = BDP interrupts are enabled
- 0 = BDP interrupts are not enabled

bit 0 **PENDIE:** Master Interrupt Enable bit(1)
- 1 = Crypto Engine interrupts are enabled
- 0 = Crypto Engine interrupts are not enabled

Note 1: The PENDIE bit is a global enable bit and must be enabled together with the other interrupts desired.

 © 2020 Microchip Technology Inc.

REGISTER 27-8: CEPOLLCON: CRYPTO ENGINE POLL CONTROL REGISTER

Bit Range	Bit 31/23/15/7	Bit 30/22/14/6	Bit 29/21/13/5	Bit 28/20/12/4	Bit 27/19/11/3	Bit 26/18/10/2	Bit 25/17/9/1	Bit 24/16/8/0
31:24	U-0	U-0	U-0	U-0	U-0	U-0	U-0	U-0
	—	—	—	—	—	—	—	—
23:16	U-0	U-0	U-0	U-0	U-0	U-0	U-0	U-0
	—	—	—	—	—	—	—	—
15:8	R/W-0	R/W-0	R/W-0	R/W-0	R/W-0	R/W-0	R/W-0	R/W-0
	BDPPLCON<15:8>							
7:0	R/W-0	R/W-0	R/W-0	R/W-0	R/W-0	R/W-0	R/W-0	R/W-0
	BDPPLCON<7:0>							

Legend:			
R = Readable bit	W = Writable bit	U = Unimplemented bit, read as '0'	
-n = Value at POR	'1' = Bit is set	'0' = Bit is cleared	x = Bit is unknown

bit 31-16 **Unimplemented:** Read as '0'

bit 15-0 **BDPPLCON<15:0>:** Buffer Descriptor Processor Poll Control bits

These bits determine the number of SYSCLK cycles that the crypto DMA would wait before refetching the descriptor control word if the BD fetched was disabled.

REGISTER 27-9: CEHDLEN: CRYPTO ENGINE HEADER LENGTH REGISTER

Bit Range	Bit 31/23/15/7	Bit 30/22/14/6	Bit 29/21/13/5	Bit 28/20/12/4	Bit 27/19/11/3	Bit 26/18/10/2	Bit 25/17/9/1	Bit 24/16/8/0
31:24	U-0	U-0	U-0	U-0	U-0	U-0	U-0	U-0
	—	—	—	—	—	—	—	—
23:16	U-0	U-0	U-0	U-0	U-0	U-0	U-0	U-0
	—	—	—	—	—	—	—	—
15:8	U-0	U-0	U-0	U-0	U-0	U-0	U-0	U-0
	—	—	—	—	—	—	—	—
7:0	R/W-0	R/W-0	R/W-0	R/W-0	R/W-0	R/W-0	R/W-0	R/W-0
	HDRLEN<7:0>							

Legend:			
R = Readable bit	W = Writable bit	U = Unimplemented bit, read as '0'	
-n = Value at POR	'1' = Bit is set	'0' = Bit is cleared	x = Bit is unknown

bit 31-8 **Unimplemented:** Read as '0'

bit 7-0 **HDRLEN<7:0>:** DMA Header Length bits
For every packet, skip this length of locations and start filling the data.

REGISTER 27-10: CETRLLEN: CRYPTO ENGINE TRAILER LENGTH REGISTER

Bit Range	Bit 31/23/15/7	Bit 30/22/14/6	Bit 29/21/13/5	Bit 28/20/12/4	Bit 27/19/11/3	Bit 26/18/10/2	Bit 25/17/9/1	Bit 24/16/8/0
31:24	U-0	U-0	U-0	U-0	U-0	U-0	U-0	U-0
	—	—	—	—	—	—	—	—
23:16	U-0	U-0	U-0	U-0	U-0	U-0	U-0	U-0
	—	—	—	—	—	—	—	—
15:8	U-0	U-0	U-0	U-0	U-0	U-0	U-0	U-0
	—	—	—	—	—	—	—	—
7:0	R/W-0	R/W-0	R/W-0	R/W-0	R/W-0	R/W-0	R/W-0	R/W-0
	TRLRLEN<7:0>							

Legend:			
R = Readable bit	W = Writable bit	U = Unimplemented bit, read as '0'	
-n = Value at POR	'1' = Bit is set	'0' = Bit is cleared	x = Bit is unknown

bit 31-8 **Unimplemented:** Read as '0'

bit 7-0 **TRLRLEN<7:0>:** DMA Trailer Length bits
For every packet, skip this length of locations at the end of the current packet and start putting the next packet.

 © 2020 Microchip Technology Inc.

27.2 Crypto Engine Buffer Descriptors

Host software creates a linked list of BDs and the hardware updates them. Table 27-3 provides a list of the Crypto Engine BDs, followed by format descriptions of each BD (see Figure 27-2 to Figure 27-9).

TABLE 27-3: CRYPTO ENGINE BUFFER DESCRIPTORS

Name (see Note 1)		Bit 31/2315/7	Bit 30/22/14/6	Bit 29/21/13/5	Bit 28/20/12/4	Bit 27/19/11/3	Bit 26/18/10/2	Bit 25/17/9/1	Bit 24/16/8/0
BD_CTRL	31:24	DESC_EN	—	CRY_MODE<2:0>			—	—	—
	23:16	—	SA_FETCH_EN	—	—	LAST_BD	LIFM	PKT_INT_EN	CBD_INT_EN
	15:8	BD_BUFLEN<15:8>							
	7:0	BD_BUFLEN<7:0>							
BD_SA_ADDR	31:24	BD_SAADDR<31:24>							
	23:16	BD_SAADDR<23:16>							
	15:8	BD_SAADDR<15:8>							
	7:0	BD_SAADR<7:0>							
BD_SRCADDR	31:24	BD_SRCADDR<31:24>							
	23:16	BD_SRCADDR<23:16>							
	15:8	BD_SRCADDR<15:8>							
	7:0	BD_SRCADDR<7:0>							
BD_DSTADDR	31:24	BD_DSTADDR<31:24>							
	23:16	BD_DSTADDR<23:16>							
	15:8	BD_DSTADDR<15:8>							
	7:0	BD_DSTADDR<7:0>							
BD_NXTPTR	31:24	BD_NXTADDR<31:24>							
	23:16	BD_NXTADDR<23:16>							
	15:8	BD_NXTADDR<15:8>							
	7:0	BD_NXTADDR<7:0>							
BD_UPDPTR	31:24	BD_UPDADDR<31:24>							
	23:16	BD_UPDADDR<23:16>							
	15:8	BD_UPDADDR<15:8>							
	7:0	BD_UPDADDR<7:0>							
BD_MSG_LEN	31:24	MSG_LENGTH<31:24>							
	23:16	MSG_LENGTH<23:16>							
	15:8	MSG_LENGTH<15:8>							
	7:0	MSG_LENGTH<7:0>							
BD_ENC_OFF	31:24	ENCR_OFFSET<31:24>							
	23:16	ENCR_OFFSET<23:16>							
	15:8	ENCR_OFFSET<15:8>							
	7:0	ENCR_OFFSET<7:0>							

Note 1: The BD must be allocated in memory on a 64-bit boundary.

FIGURE 27-2: FORMAT OF BD_CTRL

Bit Range	Bit 31/23/15/7	Bit 30/22/14/6	Bit 29/21/13/5	Bit 28/20/12/4	Bit 27/19/11/3	Bit 26/18/10/2	Bit 25/17/9/1	Bit 24/16/8/0
31-24	DESC_EN	—	CRY_MODE<2:0>			—	—	—
23-16	—	SA_FETCH_EN	—	—	LAST_BD	LIFM	PKT_INT_EN	CBD_INT_EN
15-8	BD_BUFLEN<15:8>							
7-0	BD_BUFLEN<7:0>							

bit 31 **DESC_EN**: Descriptor Enable
1 = The descriptor is owned by hardware. After processing the BD, hardware resets this bit to '0'.
0 = The descriptor is owned by software

bit 30 **Unimplemented:** Must be written as '0'

bit 29-27 **CRY_MODE<2:0>:** Crypto Mode
111 = Reserved
110 = Reserved
101 = Reserved
100 = Reserved
011 = CEK operation
010 = KEK operation
001 = Preboot authentication
000 = Normal operation

bit 22 **SA_FETCH_EN:** Fetch Security Association From External Memory
1 = Fetch SA from the SA pointer. This bit needs to be set to '1' for every new packet.
0 = Use current fetched SA or the internal SA

bit 21-20 **Unimplemented:** Must be written as '0'

bit 19 **LAST_BD:** Last Buffer Descriptors
1 = Last BD in the chain
0 = More BDs in the chain
After the last BD, the CEBDADDR goes to the base address in CEBDPADDR.

bit 18 **LIFM:** Last In Frame
In case of Receive Packets (from H/W-> Host), this field is filled by the Hardware to indicate whether the packet goes across multiple BDs. In case of transmit packets (from Host -> H/W), this field indicates whether this BD is the last in the frame.

bit 17 **PKT_INT_EN:** Packet Interrupt Enable
Generate an interrupt after processing the current BD, if it is the end of the packet.

bit 16 **CBD_INT_EN:** CBD Interrupt Enable
Generate an interrupt after processing the current BD.

bit 15-0 **BD_BUFLEN<15:0>:** Buffer Descriptor Length
This field contains the length of the buffer and is updated with the actual length filled by the receiver.

 © 2020 Microchip Technology Inc.

FIGURE 27-3: FORMAT OF BD_SADDR

Bit Range	Bit 31/23/15/7	Bit 30/22/14/6	Bit 29/21/13/5	Bit 28/20/12/4	Bit 27/19/11/3	Bit 26/18/10/2	Bit 25/17/9/1	Bit 24/16/8/0
31-24	BD_SAADDR<31:24>							
23-16	BD_SAADDR<23:16>							
15-8	BD_SAADDR<15:8>							
7-0	BD_SAADDR<7:0>							

bit 31-0 **BD_SAADDR<31:0>:** Security Association IP Session Address
The sessions' SA pointer has the keys and IV values.

FIGURE 27-4: FORMAT OF BD_SRCADDR

Bit Range	Bit 31/23/15/7	Bit 30/22/14/6	Bit 29/21/13/5	Bit 28/20/12/4	Bit 27/19/11/3	Bit 26/18/10/2	Bit 25/17/9/1	Bit 24/16/8/0
31-24	BD_SRCADDR<31:24>							
23-16	BD_SRCADDR<23:16>							
15-8	BD_SRCADDR<15:8>							
7-0	BD_SRCADDR<7:0>							

bit 31-0 **BD_SRCADDR:** Buffer Source Address
The source address of the buffer that needs to be passed through the PE-CRDMA for encryption or authentication. This address must be on a 32-bit boundary.

FIGURE 27-5: FORMAT OF BD_DSTADDR

Bit Range	Bit 31/23/15/7	Bit 30/22/14/6	Bit 29/21/13/5	Bit 28/20/12/4	Bit 27/19/11/3	Bit 26/18/10/2	Bit 25/17/9/1	Bit 24/16/8/0
31-24	BD_DSTADDR<31:24>							
23-16	BD_DSTADDR<23:16>							
15-8	BD_DSTADDR<15:8>							
7-0	BD_DSTADDR<7:0>							

bit 31-0 **BD_DSTADDR:** Buffer Destination Address
The destination address of the buffer that needs to be passed through the PE-CRDMA for encryption or authentication. This address must be on a 32-bit boundary.

FIGURE 27-6: FORMAT OF BD_NXTADDR

Bit Range	Bit 31/23/15/7	Bit 30/22/14/6	Bit 29/21/13/5	Bit 28/20/12/4	Bit 27/19/11/3	Bit 26/18/10/2	Bit 25/17/9/1	Bit 24/16/8/0
31-24	BD_NXTADDR<31:24>							
23-16	BD_NXTADDR<23:16>							
15-8	BD_NXTADDR<15:8>							
7-0	BD_NXTADDR<7:0>							

bit 31-0 **BD_NXTADDR:** Next BD Pointer Address Has Next Buffer Descriptor
The next buffer can be a next segment of the previous buffer or a new packet. This address must be on a 64-bit boundary.

FIGURE 27-7: FORMAT OF BD_UPDPTR

Bit Range	Bit 31/23/15/7	Bit 30/22/14/6	Bit 29/21/13/5	Bit 28/20/12/4	Bit 27/19/11/3	Bit 26/18/10/2	Bit 25/17/9/1	Bit 24/16/8/0
31-24	BD_UPDADDR<31:24>							
23-16	BD_UPDADDR<23:16>							
15-8	BD_UPDADDR<15:8>							
7-0	BD_UPDADDR<7:0>							

bit 31-0 **BD_UPDADDR:** UPD Address Location
The update address has the location where the CRDMA results are posted. The updated results are the ICV values, key output values as needed.

FIGURE 27-8: FORMAT OF BD_MSG_LEN

Bit Range	Bit 31/23/15/7	Bit 30/22/14/6	Bit 29/21/13/5	Bit 28/20/12/4	Bit 27/19/11/3	Bit 26/18/10/2	Bit 25/17/9/1	Bit 24/16/8/0
31-24	MSG_LENGTH<31:24>							
23-16	MSG_LENGTH<23:16>							
15-8	MSG_LENGTH<15:8>							
7-0	MSG_LENGTH<7:0>							

bit 31-0 **MSG_LENGTH:** Total Message Length
Total message length for the hash and HMAC algorithms in bytes. Total number of crypto bytes in case of GCM algorithm (LEN-C).

 © 2020 Microchip Technology Inc.

FIGURE 27-9: FORMAT OF BD_ENC_OFF

Bit Range	Bit 31/23/15/7	Bit 30/22/14/6	Bit 29/21/13/5	Bit 28/20/12/4	Bit 27/19/11/3	Bit 26/18/10/2	Bit 25/17/9/1	Bit 24/16/8/0
31-24	ENCR_OFFSET<31:24>							
23-16	ENCR_OFFSET<23:16>							
15-8	ENCR_OFFSET<15:8>							
7-0	ENCR_OFFSET<7:0>							

bit 31-0 **ENCR_OFFSET:** Encryption Offset

Encryption offset for the multi-task test cases (both encryption and authentication). The number of AAD bytes in the case of GCM algorithm (LEN-A).

27.3 Security Association Structure

Table 27-4 shows the SA structure. The Crypto Engine uses the SA to determine the settings for processing a BDP. The SA contains:

- Which algorithm to use
- Whether to use engines in parallel (for both authentication and encryption/decryption)
- The size of the key
- Authentication key
- Encryption/decryption key
- Authentication Initialization Vector (IV)
- Encryption IV

TABLE 27-4: CRYPTO ENGINE SA STRUCTURE

Name		Bit 31/23/15/7	Bit 30/22/14/6	Bit 29/21/13/5	Bit 28/20/12/4	Bit 27/19/11/3	Bit 26/18/10/2	Bit 25/17/9/1	Bit 24/16/8/0
SA_CTRL	31:24	—	—	VERIFY	—	NO_RX	OR_EN	ICVONLY	IRFLAG
	23:16	LNC	LOADIV	FB	FLAGS	—	—	—	ALGO<6>
	15:8	ALGO<5:0>						ENCTYPE	KEYSIZE<1>
	7:0	KEYSIZE<0>	MULTITASK<2:0>			CRYPTOALGO<3:0>			
SA_AUTHKEY1	31:24	AUTHKEY<31:24>							
	23:16	AUTHKEY<23:16>							
	15:8	AUTHKEY<15:8>							
	7:0	AUTHKEY<7:0>							
SA_AUTHKEY2	31:24	AUTHKEY<31:24>							
	23:16	AUTHKEY<23:16>							
	15:8	AUTHKEY<15:8>							
	7:0	AUTHKEY<7:0>							
SA_AUTHKEY3	31:24	AUTHKEY<31:24>							
	23:16	AUTHKEY<23:16>							
	15:8	AUTHKEY<15:8>							
	7:0	AUTHKEY<7:0>							
SA_AUTHKEY4	31:24	AUTHKEY<31:24>							
	23:16	AUTHKEY<23:16>							
	15:8	AUTHKEY<15:8>							
	7:0	AUTHKEY<7:0>							
SA_AUTHKEY5	31:24	AUTHKEY<31:24>							
	23:16	AUTHKEY<23:16>							
	15:8	AUTHKEY<15:8>							
	7:0	AUTHKEY<7:0>							
SA_AUTHKEY6	31:24	AUTHKEY<31:24>							
	23:16	AUTHKEY<23:16>							
	15:8	AUTHKEY<15:8>							
	7:0	AUTHKEY<7:0>							
SA_AUTHKEY7	31:24	AUTHKEY<31:24>							
	23:16	AUTHKEY<23:16>							
	15:8	AUTHKEY<15:8>							
	7:0	AUTHKEY<7:0>							
SA_AUTHKEY8	31:24	AUTHKEY<31:24>							
	23.16	AUTHKEY<23.16>							
	15:8	AUTHKEY<15:8>							
	7:0	AUTHKEY<7:0>							
SA_ENCKEY1	31:24	ENCKEY<31:24>							
	23:16	ENCKEY<23:16>							
	15:8	ENCKEY<15:8>							
	7:0	ENCKEY<7:0>							
SA_ENCKEY2	31:24	ENCKEY<31:24>							
	23:16	ENCKEY<23:16>							
	15:8	ENCKEY<15:8>							
	7:0	ENCKEY<7:0>							
SA_ENCKEY3	31:24	ENCKEY<31:24>							
	23:16	ENCKEY<23:16>							
	15:8	ENCKEY<15:8>							
	7:0	ENCKEY<7:0>							
SA_ENCKEY4	31:24	ENCKEY<31:24>							
	23:16	ENCKEY<23:16>							
	15:8	ENCKEY<15:8>							
	7:0	ENCKEY<7:0>							
SA_ENCKEY5	31:24	ENCKEY<31:24>							
	23:16	ENCKEY<23:16>							
	15:8	ENCKEY<15:8>							
	7:0	ENCKEY<7:0>							
SA_ENCKEY6	31:24	ENCKEY<31:24>							
	23:16	ENCKEY<23:16>							
	15:8	ENCKEY<15:8>							
	7:0	ENCKEY<7:0>							

 © 2020 Microchip Technology Inc.

TABLE 27-4: CRYPTO ENGINE SA STRUCTURE (CONTINUED)

Name		Bit 31/23/15/7	Bit 30/22/14/6	Bit 29/21/13/5	Bit 28/20/12/4	Bit 27/19/11/3	Bit 26/18/10/2	Bit 25/17/9/1	Bit 24/16/8/0
SA_ENCKEY7	31:24	ENCKEY<31:24>							
	23:16	ENCKEY<23:16>							
	15:8	ENCKEY<15:8>							
	7:0	ENCKEY<7:0>							
SA_ENCKEY8	31:24	ENCKEY<31:24>							
	23:16	ENCKEY<23:16>							
	15:8	ENCKEY<15:8>							
	7:0	ENCKEY<7:0>							
SA_AUTHIV1	31:24	AUTHIV<31:24>							
	23:16	AUTHIV<23:16>							
	15:8	AUTHIV<15:8>							
	7:0	AUTHIV<7:0>							
SA_AUTHIV2	31:24	AUTHIV<31:24>							
	23:16	AUTHIV<23:16>							
	15:8	AUTHIV<15:8>							
	7:0	AUTHIV<7:0>							
SA_AUTHIV3	31:24	AUTHIV<31:24>							
	23:16	AUTHIV<23:16>							
	15:8	AUTHIV<15:8>							
	7:0	AUTHIV<7:0>							
SA_AUTHIV4	31:24	AUTHIV<31:24>							
	23:16	AUTHIV<23:16>							
	15:8	AUTHIV<15:8>							
	7:0	AUTHIV<7:0>							
SA_AUTHIV5	31:24	AUTHIV<31:24>							
	23:16	AUTHIV<23:16>							
	15:8	AUTHIV<15:8>							
	7:0	AUTHIV<7:0>							
SA_AUTHIV6	31:24	AUTHIV<31:24>							
	23:16	AUTHIV<23:16>							
	15:8	AUTHIV<15:8>							
	7:0	AUTHIV<7:0>							
SA_AUTHIV7	31:24	AUTHIV<31:24>							
	23:16	AUTHIV<23:16>							
	15:8	AUTHIV<15:8>							
	7:0	AUTHIV<7:0>							
SA_AUTHIV8	31:24	AUTHIV<31:24>							
	23:16	AUTHIV<23:16>							
	15:8	AUTHIV<15:8>							
	7:0	AUTHIV<7:0>							

TABLE 27-4: CRYPTO ENGINE SA STRUCTURE (CONTINUED)

Name		Bit 31/23/15/7	Bit 30/22/14/6	Bit 29/21/13/5	Bit 28/20/12/4	Bit 27/19/11/3	Bit 26/18/10/2	Bit 25/17/9/1	Bit 24/16/8/0
SA_ENCIV1	31:24	ENCIV<31:24>							
	23:16	ENCIV<23:16>							
	15:8	ENCIV<15:8>							
	7:0	ENCIV<7:0>							
SA_ENCIV2	31:24	ENCIV<31:24>							
	23:16	ENCIV<23:16>							
	15:8	ENCIV<15:8>							
	7:0	ENCIV<7:0>							
SA_ENCIV3	31:24	ENCIV<31:24>							
	23:16	ENCIV<23:16>							
	15:8	ENCIV<15:8>							
	7:0	ENCIV<7:0>							
SA_ENCIV4	31:24	ENCIV<31:24>							
	23:16	ENCIV<23:16>							
	15:8	ENCIV<15:8>							
	7:0	ENCIV<7:0>							

 © 2020 Microchip Technology Inc.

Figure 27-10 shows the SA control word structure.

The Crypto Engine fetches different structures for different flows and ensures that hardware fetches minimum words from SA required for processing. The structure is ready for hardware optimal data fetches.

FIGURE 27-10: FORMAT OF SA_CTRL

Bit Range	Bit 31/23/15/7	Bit 30/22/14/6	Bit 29/21/13/5	Bit 28/20/12/4	Bit 27/19/11/3	Bit 26/18/10/2	Bit 25/17/9/1	Bit 24/16/8/0
31-24	—	—	VERIFY	—	NO_RX	OR_EN	ICVONLY	IRFLAG
23-16	LNC	LOADIV	FB	FLAGS	—	—	—	ALGO<6>
15-8	ALGO<5:0>						ENC	KEYSIZE<1>
7-0	KEYSIZE<0>	MULTITASK<2:0>			CRYPTOALGO<3:0>			

bit 31-30 **Reserved:** Initialize to zero.

bit 29 **VERIFY:** NIST Procedure Verification Setting
1 = NIST procedures are to be used
0 = Do not use NIST procedures

Note: The bit value shall be zero for the device.

bit 28 **Reserved:** Initialize to zero.

bit 27 **NO_RX:** Receive DMA Control Setting
1 = Only calculate ICV for authentication calculations
0 = Normal processing

bit 26 **OR_EN:** OR Register Bits Enable Setting
1 = OR the register bits with the internal value of the CSR register
0 = Normal processing

bit 25 **ICVONLY:** Incomplete Check Value Only Flag
This affects the SHA-1 algorithm only. It has no effect on the AES algorithm.
1 = Only three words of the HMAC result are available
0 = All results from the HMAC result are available

bit 24 **IRFLAG:** Immediate Result of Hash Setting
This bit is set when the immediate result for hashing is requested.
1 = Save the immediate result for hashing
0 = Do not save the immediate result

bit 23 **LNC:** Load New Keys Setting
1 = Load a new set of keys for encryption and authentication
0 = Do not load new keys

bit 22 **LOADIV:** Load IV Setting
1 = Load the IV from this SA
0 = Use the next IV

bit 21 **FB:** First Block Setting
This bit indicates that this is the first block of data to feed the IV value.
1 = Indicates this is the first block of data
0 = Indicates this is not the first block of data

bit 20 **FLAGS:** Incoming/Outgoing Flow Setting
1 = SA is associated with an outgoing flow
0 = SA is associated with an incoming flow

bit 19-17 **Reserved:** Initialize to zero.

Figure 27-10: FORMAT OF SA_CTRL (CONTINUED)

bit 16-10 **ALGO<6:0>:** Type of Algorithm to Use
1xxxxxx = HMAC 1
x1xxxxx = SHA-256
xx1xxxx = SHA1
xxx1xxx = MD5
xxxx1xx = AES
xxxxx1x = TDES
xxxxxx1 = DES

bit 9 **ENC:** Type of Encryption Setting
1 = Encryption
0 = Decryption

bit 8-7 **KEYSIZE<1:0>:** Size of Keys in SA_AUTHKEYx or SA_ENCKEYx
11 = Reserved; do not use
10 = 256 bits
01 = 192 bits
00 = 128 bits(1)

bit 6-4 **MULTITASK<2:0>:** How to Combine Parallel Operations in the Crypto Engine
111 = Parallel pass (decrypt and authenticate incoming data in parallel)
101 = Pipe pass (encrypt the incoming data, and then perform authentication on the encrypted data)
011 = Reserved
010 = Reserved
001 = Reserved
000 = Encryption or authentication or decryption (no pass)

bit 3-0 **CRYPTOALGO<3:0>:** Mode of operation for the Crypto Algorithm
1111 = Reserved
1110 = AES_GCM (for AES processing)
1101 = RCTR (for AES processing)
1100 = RCBC_MAC (for AES processing)
1011 = ROFB (for AES processing)
1010 = RCFB (for AES processing)
1001 = RCBC (for AES processing)
1000 = RECB (for AES processing)
0111 = TOFB (for Triple-DES processing)
0110 = TCFB (for Triple-DES processing)
0101 = TCBC (for Triple-DES processing)
0100 = TECB (for Triple-DES processing)
0011 = OFB (for DES processing)
0010 = CFB (for DES processing)
0001 = CBC (for DES processing)
0000 = ECB (for DES processing)

Note 1: This setting does not alter the size of SA_AUTHKEYx or SA_ENCKEYx in the SA, only the number of bits of SA_AUTHKEYx and SA_ENCKEYx that are used.

 © 2020 Microchip Technology Inc.

Note 1: IV size for AES GCM is restricted to 96 bits.

2: Supports 32-bit counter mode only.

3: IV value is expected in big endian format.

Example: 12 byte IV Value: with SA_PTR = 0x00002000
- IV value desired = 0x11223344_55667788_99aabbcc
- In the SA Structure IV will be starting at (32-bit) word offset [25]

SYSTEM ADDR: DATA:
0x00002064: 0x11223344
0x00002068: 0x55667788
0x0000206C: 0x99aabbcc

4: Hash results are posted in big endian format as below.

Example: 16 byte hash result with UPD_PTR (BD[5]) = 0x00003000
Hash actual result: 0x00010203_04050607_08090a0b_0c0d0e0f
SYSTEM ADDR: DATA
0x00003000: 0x00010203
0x00003004: 0x04050607
0x00003008: 0x08090a0b
0x0000300C: 0x0c0d0e0f

 © 2020 Microchip Technology Inc.

28.0 TRUE RANDOM NUMBER GENERATOR (TRNG)

Note: This data sheet summarizes the features of the PIC32MZ W1 family of devices. It is not intended to be a comprehensive reference source. To complement the information in this data sheet, refer to **Section 49. "Crypto Engine (CE) and Random Number Generator (RNG)"** (DS60001246) in the *"PIC32 Family Reference Manual"*, which is available from the Microchip web site (www.microchip.com/PIC32).

The Random Number Generator (RNG) core implements a thermal noise-based, TRNG and a cryptographically secure Pseudo-Random Number Generator (PRNG).

The TRNG uses multiple ring oscillators and the inherent thermal noise of integrated circuits to generate true random numbers that can initialize the PRNG.

The PRNG is a flexible Linear-Feedback Shift Register (LFSR), which is capable of displaying a maximal length LFSR of up to 64-bits.

The key features of the RNG are:

- TRNG:
  - Up to 50 Mbps of random bits
  - Multi-ring oscillator-based design
  - Built-in bias corrector
- PRNG:
  - LFSR-based
  - Up to 64-bit polynomial length
  - Programmable polynomial
  - TRNG can be seed value

To start using the PRNG, it is necessary to set the initial seed value, the length of the polynomial, and the polynomial equation.

The initial seed value is set by writing to the RNGNUMGEN1 and RNGNUMGEN2 registers, which are also the registers where the random value is read. The initial seed value can also be loaded from the TRNG by writing a '1' to the LOAD bit (RNGCON<12>). This action transfers the current value in the RNGSEEDx registers to the corresponding RNGNUMGENx registers. The polynomial length for the LFSR is set by writing the length (in bits) to the PLEN<7:0> bits (RNGCON<7:0>)

RNGPOLY1 and RNGPOLY2 control the feedback taps of the polynomial. The PRNG uses a reverse shift LFSR to reverse the bit positions, and largest tap of the polynomial is assigned to bit 0. The length (PLEN[7:0] in RNGCON) defines the feedback position.

To select a 42-bit (in this case maximal length) LFSR, it is described by:

x42 + x41 + x20 + x19 + 1

SFR settings:

- RNGNUMGEN1 = SEED-Low
- RNGNUMGEN2 = SEED-High
- RNGPOLY1 = 0x00C0_0003
- RNGPOLY2 = 0x0000_0000
- RNGCON = 0x0000_062A

The RNG's bus clock is gated when the RNG Peripheral Module Disable (PMD) bit is set. When the PMD is set, the RNG cannot be read or written.

TABLE 28-1: RNG BLOCK DIAGRAM

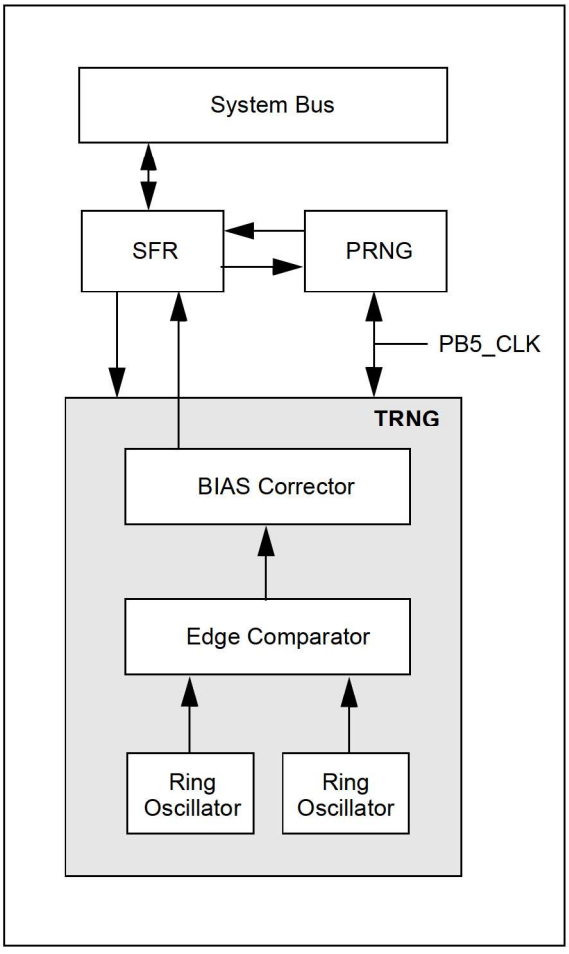

28.1 RNG Control Registers

TABLE 28-2: RNG REGISTER MAP

Virtual Address (BF8E_#)	Register Name	Bit Range	Bits																All Resets
			31/15	30/14	29/13	28/12	27/11	26/10	25/9	24/8	23/7	22/6	21/5	20/4	19/3	18/2	17/1	16/0	
5000	RNGVER	31:16	ID<15:0>																xxxx
		15:0	VERSION<7:0>								REVISION<7:0>								xxxx
5004	RNGCON	31:16	—	—	—	—	—	—	—	—	—	—	—	—	—	—	—	—	0000
		15:0	—	—	—	LOAD	TRNGMODE	CONT	PRNGEN	TRNGEN	PLEN<7:0>								0064
5008	RNGPOLY1	31:16	POLY<31:16>																FFFF
		15:0	POLY<15:0>																0000
500C	RNGPOLY2	31:16	POLY<31:16>																FFFF
		15:0	POLY<15:0>																0000
5010	RNGNUMGEN1	31:16	RNG<31:16>																FFFF
		15:0	RNG<15:0>																FFFF
5014	RNGNUMGEN2	31:16	RNG<31:16>																FFFF
		15:0	RNG<15:0>																FFFF
5018	RNGSEED1	31:16	SEED<31:16>																0000
		15:0	SEED<15:0>																0000
501C	RNGSEED2	31:16	SEED<31:16>																0000
		15:0	SEED<15:0>																0000
5020	RNGCNT	31:16	—	—	—	—	—	—	—	—	—	—	—	—	—	—	—	—	0000
		15:0	—	—	—	—	—	—	—	—	—	RCNT<6:0>							0000

Legend: x = unknown value on Reset; — = unimplemented, read as '0'. Reset values are shown in hexadecimal.

© 2020 Microchip Technology Inc.

REGISTER 28-1: RNGVER: RANDOM NUMBER GENERATOR VERSION REGISTER

Bit Range	Bit 31/23/15/7	Bit 30/22/14/6	Bit 29/21/13/5	Bit 28/20/12/4	Bit 27/19/11/3	Bit 26/18/10/2	Bit 25/17/9/1	Bit 24/16/8/0
31:24	R-0	R-0	R-0	R-0	R-0	R-0	R-0	R-0
	ID<15:8>							
23:16	R-0	R-0	R-0	R-0	R-0	R-0	R-0	R-0
	ID<7:0>							
15:8	R-0	R-0	R-0	R-0	R-0	R-0	R-0	R-0
	VERSION<7:0>							
7:0	R-0	R-0	R-0	R-0	R-0	R-0	R-0	R-0
	REVISION<7:0>							

Legend:			
R = Readable bit	W = Writable bit	U = Unimplemented bit, read as '0'	
-n = Value at POR	'1' = Bit is set	'0' = Bit is cleared	x = Bit is unknown

bit 31-16 **ID<15:0>:** Block Identification bits

bit 15-8 **VERSION<7:0>:** Block Version bits

bit 7-0 **REVISION<7:0>:** Block Revision bits

REGISTER 28-2: RNGCON: RANDOM NUMBER GENERATOR CONTROL REGISTER

Bit Range	Bit 31/23/15/7	Bit 30/22/14/6	Bit 29/21/13/5	Bit 28/20/12/4	Bit 27/19/11/3	Bit 26/18/10/2	Bit 25/17/9/1	Bit 24/16/8/0
31:24	U-0	U-0	U-0	U-0	U-0	U-0	U-0	U-0
	—	—	—	—	—	—	—	—
23:16	U-0	U-0	U-0	U-0	U-0	U-0	U-0	U-0
	—	—	—	—	—	—	—	—
15:8	U-0	U-0	U-0	R/W-0	R/W-0	R/W-0	R/W-0	R/W-0
	—	—	—	LOAD	TRNGMODE	CONT	PRNGEN	TRNGEN
7:0	R/W-0	R/W-1	R/W-1	R/W-0	R/W-0	R/W-1	R/W-0	R/W-0
	PLEN<7:0>							

Legend:			
R = Readable bit	W = Writable bit	U = Unimplemented bit, read as '0'	
-n = Value at POR	'1' = Bit is set	'0' = Bit is cleared	x = Bit is unknown

bit 31-13 **Unimplemented:** Read as '0'

bit 12 **LOAD:** Device Select bit

This bit is self-clearing and is used to load the seed from the TRNG (random value) as a seed to the PRNG.

bit 11 **TRNGMODE:** TRNG Mode Selection bit

1 = Use ring oscillators with bias corrector
0 = Use ring oscillators with XOR tree

Note: Enabling this bit will generate numbers with a more even distribution of randomness.

bit 10 **CONT:** PRNG Number Shift Enable bit

1 = PRNG random number is shifted every cycle
0 = PRNG random number is shifted when the previous value is removed

bit 9 **PRNGEN:** PRNG Operation Enable bit

1 = PRNG operation is enabled
0 = PRNG operation is not enabled

bit 8 **TRNGEN:** TRNG Operation Enable bit

1 = TRNG operation is enabled
0 = TRNG operation is not enabled

bit 7-0 **PLEN<7:0>:** PRNG Polynomial Length bits

These bits contain the length of the polynomial used for the PRNG.

 © 2020 Microchip Technology Inc.

REGISTER 28-3: RNGPOLYx: RANDOM NUMBER GENERATOR POLYNOMIAL REGISTER 'x' ('x' = 1 or 2)

Bit Range	Bit 31/23/15/7	Bit 30/22/14/6	Bit 29/21/13/5	Bit 28/20/12/4	Bit 27/19/11/3	Bit 26/18/10/2	Bit 25/17/9/1	Bit 24/16/8/0
31:24	R/W-1	R/W-1	R/W-1	R/W-1	R/W-1	R/W-1	R/W-1	R/W-1
	POLY<31:24>							
23:16	R/W-1	R/W-1	R/W-1	R/W-1	R/W-1	R/W-1	R/W-1	R/W-1
	POLY<23:16>							
15:8	R/W-0	R/W-0	R/W-0	R/W-0	R/W-0	R/W-0	R/W-0	R/W-0
	POLY<15:8>							
7:0	R/W-0	R/W-0	R/W-0	R/W-0	R/W-0	R/W-0	R/W-0	R/W-0
	POLY<7:0>							

Legend:			
R = Readable bit	W = Writable bit	U = Unimplemented bit, read as '0'	
-n = Value at POR	'1' = Bit is set	'0' = Bit is cleared	x = Bit is unknown

bit 31-0 **POLY<31:0>:** PRNG LFSR Polynomial MSB/LSB bits (RNGPOLY1 = LSB, RNGPOLY2 = MSB)

REGISTER 28-4: RNGNUMGENx: RANDOM NUMBER GENERATOR REGISTER 'x' ('x' = 1 or 2)

Bit Range	Bit 31/23/15/7	Bit 30/22/14/6	Bit 29/21/13/5	Bit 28/20/12/4	Bit 27/19/11/3	Bit 26/18/10/2	Bit 25/17/9/1	Bit 24/16/8/0
31:24	R/W-1	R/W-1	R/W-1	R/W-1	R/W-1	R/W-1	R/W-1	R/W-1
	RNG<31:24>							
23:16	R/W-1	R/W-1	R/W-1	R/W-1	R/W-1	R/W-1	R/W-1	R/W-1
	RNG<23:16>							
15:8	R/W-1	R/W-1	R/W-1	R/W-1	R/W-1	R/W-1	R/W-1	R/W-1
	RNG<15:8>							
7:0	R/W-1	R/W-1	R/W-1	R/W-1	R/W-1	R/W-1	R/W-1	R/W-1
	RNG<7:0>							

Legend:			
R = Readable bit	W = Writable bit	U = Unimplemented bit, read as '0'	
-n = Value at POR	'1' = Bit is set	'0' = Bit is cleared	x = Bit is unknown

bit 31-0 **RNG<31:0>:** Current PRNG MSB/LSB Value bits (RNGNUMGEN1 = LSB, RNGNUMGEN2 = MSB)

REGISTER 28-5: RNGSEEDx: TRUE RANDOM NUMBER GENERATOR SEED REGISTER 'x' ('x' = 1 or 2)

Bit Range	Bit 31/23/15/7	Bit 30/22/14/6	Bit 29/21/13/5	Bit 28/20/12/4	Bit 27/19/11/3	Bit 26/18/10/2	Bit 25/17/9/1	Bit 24/16/8/0
31:24	R-0	R-0	R-0	R-0	R-0	R-0	R-0	R-0
	SEED<31:24>							
23:16	R-0	R-0	R-0	R-0	R-0	R-0	R-0	R-0
	SEED<23:16>							
15:8	R-0	R-0	R-0	R-0	R-0	R-0	R-0	R-0
	SEED<15:8>							
7:0	R-0	R-0	R-0	R-0	R-0	R-0	R-0	R-0
	SEED<7:0>							

Legend:			
R = Readable bit	W = Writable bit	U = Unimplemented bit, read as '0'	
-n = Value at POR	'1' = Bit is set	'0' = Bit is cleared	x = Bit is unknown

bit 31-0 **SEED<31:0>:** TRNG MSB/LSB Value bits (RNGSEED1 = LSB, RNGSEED2 = MSB)

REGISTER 28-6: RNGCNT: TRUE RANDOM NUMBER GENERATOR COUNT REGISTER

Bit Range	Bit 31/23/15/7	Bit 30/22/14/6	Bit 29/21/13/5	Bit 28/20/12/4	Bit 27/19/11/3	Bit 26/18/10/2	Bit 25/17/9/1	Bit 24/16/8/0
31:24	U-0	U-0	U-0	U-0	U-0	U-0	U-0	U-0
	—	—	—	—	—	—	—	—
23:16	U-0	U-0	U-0	U-0	U-0	U-0	U-0	U-0
	—	—	—	—	—	—	—	—
15:8	U-0	U-0	U-0	U-0	U-0	U-0	U-0	U-0
	—	—	—	—	—	—	—	—
7:0	U-0	R/W-0	R/W-0	R/W-0	R/W-0	R/W-0	R/W-0	R/W-0
	—	RCNT<6:0>						

Legend:			
R = Readable bit	W = Writable bit	U = Unimplemented bit, read as '0'	
-n = Value at POR	'1' = Bit is set	'0' = Bit is cleared	x = Bit is unknown

bit 31-7 **Unimplemented:** Read as '0'

bit 6-0 **RCNT<6:0>:** Number of Valid TRNG MSB 32 bits

 © 2020 Microchip Technology Inc.

29.0 12-BIT HIGH-SPEED SUCCESSIVE APPROXIMATION REGISTER (SAR) ADC

Note: This data sheet summarizes the features of the PIC32MZ W1 family of devices. It is not intended to be a comprehensive reference source. To complement the information in this data sheet, refer to **Section 22. "12-bit High-Speed Successive Approximation Register (SAR) ADC"** (DS60001344) in the *"PIC32 Family Reference Manual"*, which is available from the Microchip web site (www.microchip.com/PIC32).

The ADC is designed to support power conversion, and general use applications. The PIC32MZ W1 supports two 12-bit ADC modules, one dedicated ADC SARCORE and one shared ADC SARCORE.

SAR ADC includes the following key features:

- 12-bit resolution
- Two ADC modules with dedicated sample and hold (S&H) circuits
- Single-ended and/or differential inputs
- Can operate during Sleep mode
- Supports touch sense applications
- Two digital comparators
- Two digital filters supporting two modes:
  - Oversampling mode
  - Averaging mode
- Designed for general purpose applications

The 12-bit HS SAR ADC has one dedicated ADC module (ADC1) and one shared ADC module (ADC2). The dedicated ADC module uses a single input and is intended for high-speed and precise sampling of time-sensitive or transient inputs. The the shared ADC module incorporates a multiplexer on the input to facilitate a larger group of inputs, with slower sampling, and provides flexible automated scanning option through the input scan logic.

For each ADC module, the analog inputs are connected to the S&H capacitor. The clock, sampling time, and output data resolution for each ADC module can be set independently. The ADC module performs the conversion of the input analog signal based on the configurations set in the registers. When conversion is complete, the final result is stored in the result buffer for the specific analog input and is passed to the digital filter and digital comparator if configured to use data from this particular sample.

Basic CVD provides a touch interface based on self-capacitance touch sensing. The ADC module supports CVD feature by using the shared ADC core to perform a modified scan of all second and third class channels. The feature can be used to make single-ended or differential measurement of external capacitors. Thus the basic CVD feature provides an analog front-end for capacitive touch screen application.

The module enables the digital comparator to set its interrupt flag if the capacitance drop detected is greater than a threshold value to decide if a touch event is happening or not on pad. Then the interrupt can wake up the CPU during idle or sleep or to signal the running software to branch to a different routine because of the touch event on pad.

29.1 Activation Sequence

Step 1: Write all the essential ADC configuration SFRs including the ADC control clock and all ADC core clocks setup as given below:

- ADCCON1, keeping the ON bit = 0
- ADCCON2, especially paying attention to ADCDIV<6:0> and SAMC<9:0>
- ADCANCON, keeping all analog enables ANENx bit = 0, WKUPCLKCNT bit = 0xA
- ADCCON3, keeping all DIGEN5x = 0, especially paying attention to ADCSEL<1:0>, and CONCLKDIV <5:0>
- ADCxTIME, ADCDIVx<6:0>, and SAMCx<9:0>
- ADCTRGMODE, ADCIMCONx, ADCTRGSNS, ADCCSSx, ADCGIRQENx, ADCTRGx, ADCBASE

Step 2: Set the ON bit to '1', which enables the ADC control clock.

Step 3: Wait for the interrupt or polls the status bit BGVRRDY = 1, which signals that the device analog environment (band gap) is ready.

Step 4: Set the ANENx bit to '1' for each of the ADC SAR cores to be used.

Step 5: Wait for the interrupt or polls the warm-up ready bits WKRDYx = 1, which signals that the respective ADC SAR cores are ready to operate.

Step 6: Set the DIGENx bit to '1', which enables the digital circuitry to immediately begin processing incoming triggers to perform data conversions.

The throughput rate is calculated, as shown in Equation 29-1. Refer **40.0 "Electrical Specifications"** for more information.

EQUATION 29-1: ADC THROUGHPUT RATE

$$FTP = \frac{T_{AD}}{(T_{SAMP} + T_{CONV})}$$

Where,

T_{AD} = the frequency of the individual ADC module

FIGURE 29-1: ADC BLOCK DIAGRAM

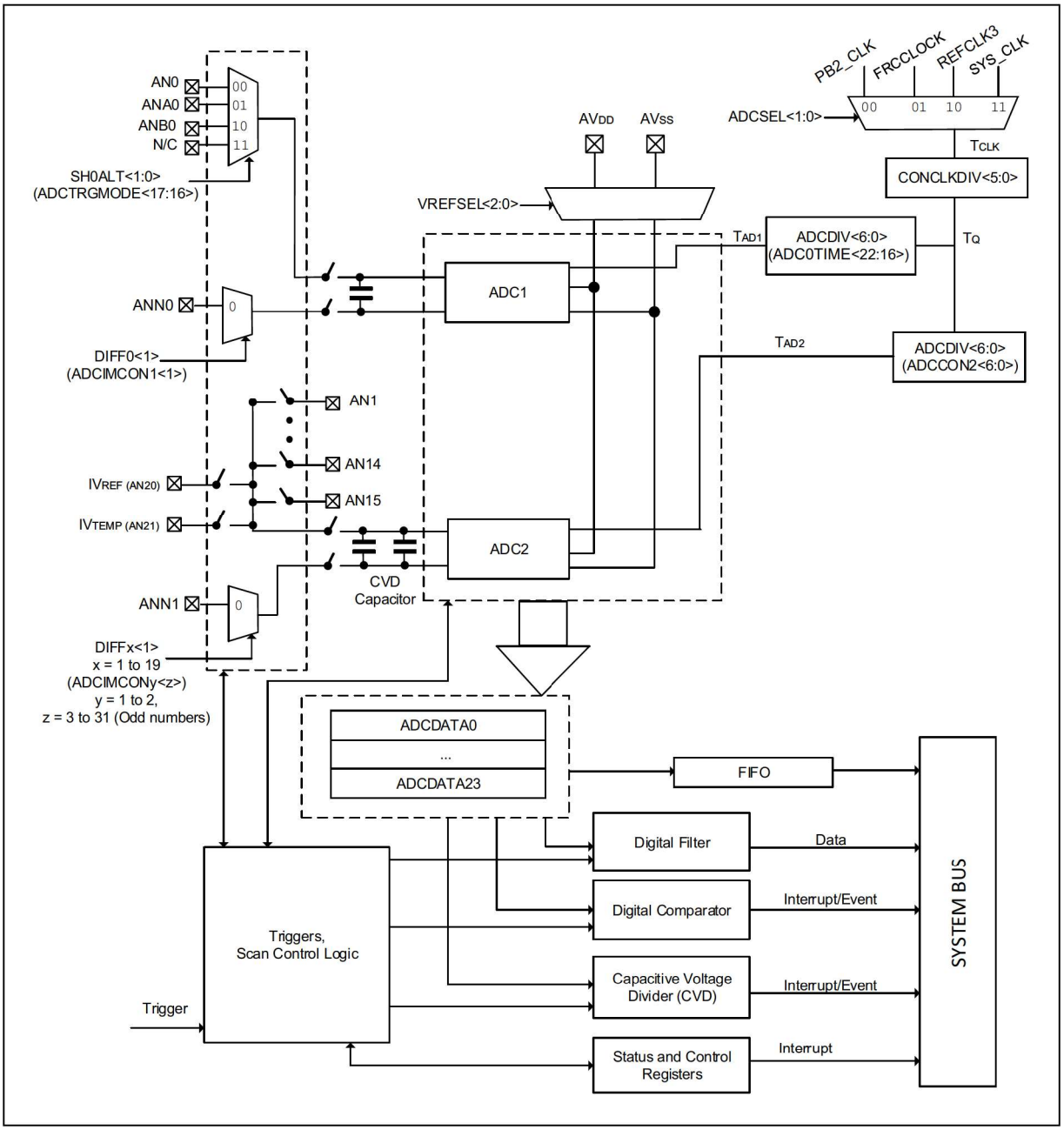

 © 2020 Microchip Technology Inc.

FIGURE 29-2: S&H BLOCK DIAGRAM

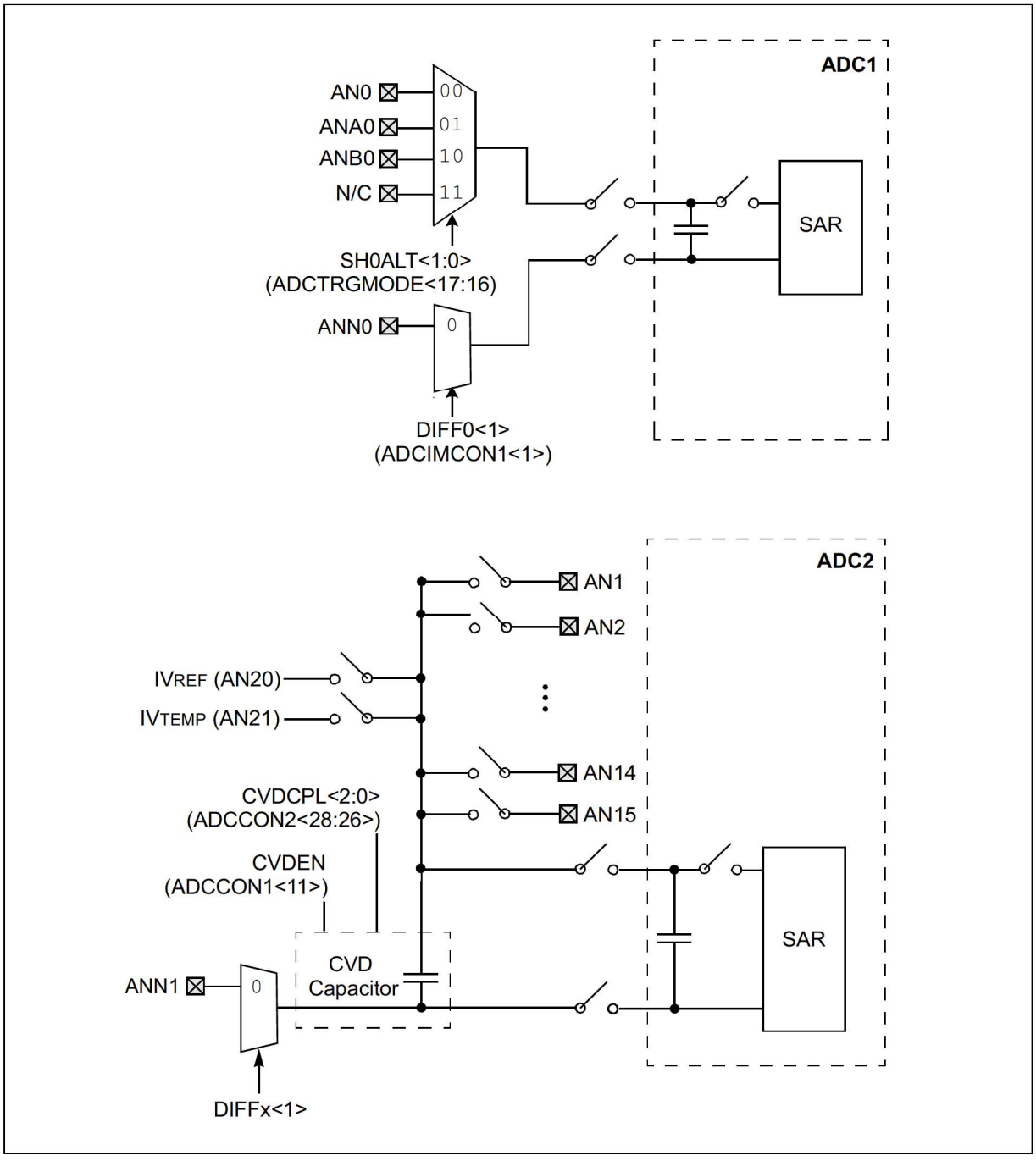

FIGURE 29-3: FIFO BLOCK DIAGRAM

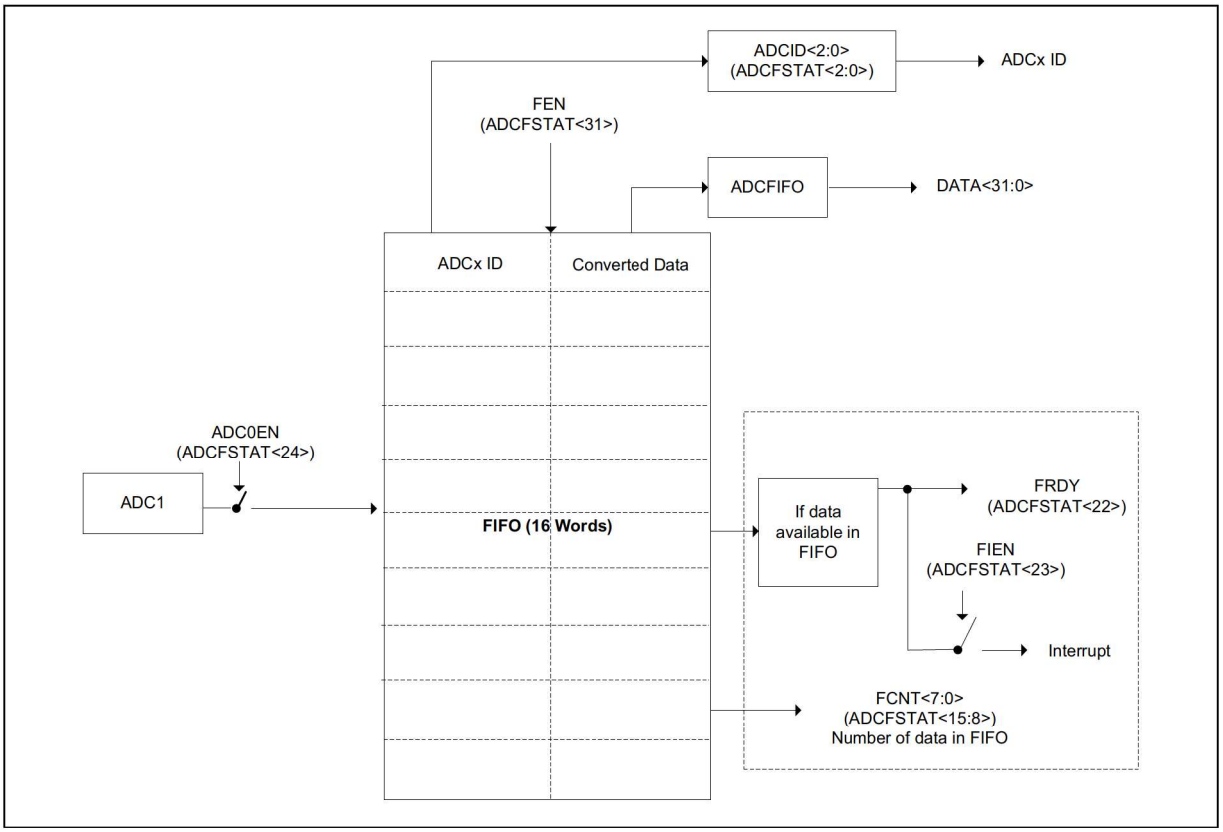

 © 2020 Microchip Technology Inc.

29.2 ADC Control Registers

TABLE 29-1: ADC REGISTER MAP

Virtual Address (1F82_#)	Register Name	Bit Range	Bits																All Resets
			31/15	30/14	29/13	28/12	27/11	26/10	25/9	24/8	23/7	22/6	21/5	20/4	19/3	18/2	17/1	16/0	
1000	ADCCON1	31:16	—	—	—	—	—	—	—	—	FRACT	SELRES<1:0>			STRGSRC<4:0>				0060
		15:0	ON	—	SIDL	—	CVDEN	FSYDMA	FSYUPB	SCANEN	—	IRQVS<2:0>			STRGLVL	DMABL<2:0>			1000
1010	ADCCON2	31:16	BGVRRDY	REFFLT	EOSRDY	CVDCPL<2:0>			SAMC<9:0>										0000
		15:0	BGVRIEN	REFFLTIEN	EOSIEN	—	ENXCN-VRT	—	—	—	—	ADCDIV<6:0>							0000
1020	ADCCON3	31:16	ADCSEL<1:0>		CONCLKDIV<5:0>						DIGEN7	—	—	—	—	—	—	DIGEN0	0000
		15:0	VREFSEL<2:0>			TRGSUSP	UPDIEN	UPDRDY	SAMP	RQCNVRT	GLSWTRG	GSWTRG	ADINSEL<5:0>						0000
1030	ADCTRGMODE	31:16	—	—	—	—	—	—	—	—	—	—	—	—	—	—	SH0ALT<1:0>		0000
		15:0	—	—	—	—	—	—	—	STRGEN1	—	—	—	—	—	—	—	SSAMPEN0	0000
1040	ADCIMCON1	31:16	DIFF15	SIGN15	DIFF14	SIGN14	DIFF13	SIGN13	DIFF12	SIGN12	DIFF11	SIGN11	DIFF10	SIGN10	DIFF9	SIGN9	DIFF8	SIGN8	0000
		15:0	DIFF7	SIGN7	DIFF6	SIGN6	DIFF5	SIGN5	DIFF4	SIGN4	DIFF3	SIGN3	DIFF2	SIGN2	DIFF1	SIGN1	DIFF0	SIGN0	0000
1050	ADCIMCON2	31:16	—	—	—	—	—	—	—	—	—	—	—	—	—	—	—	—	0000
		15:0	—	—	—	—	—	—	—	—	DIFF19	SIGN19	DIFF18	SIGN18	DIFF17	SIGN17	DIFF16	SIGN16	0000
1080	ADCGIRQEN1	31:16	—	—	—	—	—	—	—	—	—	—	—	—	AGIEN19	AGIEN18	AGIEN17	AGIEN16	0000
		15:0	AGIEN15	AGIEN14	AGIEN13	AGIEN12	AGIEN11	AGIEN10	AGIEN9	AGIEN8	AGIEN7	AGIEN6	AGIEN5	AGIEN4	AGIEN3	AGIEN2	AGIEN1	AGIEN0	0000
10A0	ADCCSS1	31:16	—	—	—	—	—	—	—	—	—	—	—	—	CSS19	CSS18	CSS17	CSS16	0000
		15:0	CSS15	CSS14	CSS13	CSS12	CSS11	CSS10	CSS9	CSS8	CSS7	CSS6	CSS5	CSS4	CSS3	CSS2	CSS1	CSS0	0000
10C0	ADCDSTAT1	31:16	—	—	—	—	—	—	—	—	—	—	—	—	ARDY19	ARDY18	ARDY17	ARDY16	0000
		15:0	ARDY15	ARDY14	ARDY13	ARDY12	ARDY11	ARDY10	ARDY9	ARDY8	ARDY7	ARDY6	ARDY5	ARDY4	ARDY3	ARDY2	ARDY1	ARDY0	0000
10E0	ADCCMPEN1	31:16	—	—	—	—	—	—	—	—	—	—	—	—	CMPE19	CMPE18	CMPE17	CMPE16	0000
		15:0	CMPE15	CMPE14	CMPE13	CMPE12	CMPE11	CMPE10	CMPE9	CMPE8	CMPE7	CMPE6	CMPE5	CMPE4	CMPE3	CMPE2	CMPE1	CMPE0	0000
10F0	ADCCMP1	31:16	DCMPHI<15:0>																0000
		15:0	DCMPLO<15:0>																0000
1100	ADCCMPEN2	31:16	—	—	—	—	—	—	—	—	—	—	—	—	CMPE19	CMPE18	CMPE17	CMPE16	0000
		15:0	CMPE15	CMPE14	CMPE13	CMPE12	CMPE11	CMPE10	CMPE9	CMPE8	CMPE7	CMPE6	CMPE5	CMPE4	CMPE3	CMPE2	CMPE1	CMPE0	0000
1110	ADCCMP2	31:16	DCMPHI<15:0>																0000
		15:0	DCMPLO<15:0>																0000
11A0	ADCFLTR1	31:16	AFEN	DATA16EN	DFMODE	OVRSAM<2:0>			AFGIEN	AFRDY	—	—	—	CHNLID<4:0>					0000
		15:0	FLTRDATA<15:0>																0000
11B0	ADCFLTR2	31:16	AFEN	DATA16EN	DFMODE	OVRSAM<2:0>			AFGIEN	AFRDY	—	—	—	CHNLID<4:0>					0000
		15:0	FLTRDATA<15:0>																0000
1200	ADCTRG1	31:16	—	—	—	TRGSRC3<4:0>					—	—	—	TRGSRC2<4:0>					0000
		15:0	—	—	—	TRGSRC1<4:0>					—	—	—	TRGSRC0<4:0>					0000
1210	ADCTRG2	31:16	—	—	—	TRGSRC7<4:0>					—	—	—	TRGSRC6<4:0>					0000
		15:0	—	—	—	TRGSRC5<4:0>					—	—	—	TRGSRC4<4:0>					0000
1280	ADCCMPCON1	31:16	CVDDATA<15:0>																0000
		15:0	—	—	AINID<5:0>						ENDCMP	DCMPGIEN	DCMPED	IEBTWN	IEHIHI	IEHILO	IELOHI	IELOLO	0000

Note 1: All registers in this table (with the exception of ADCDATAx) have corresponding CLR, SET and INV registers at their virtual addresses, plus offsets of 0x4, 0x8 and 0xC, respectively.

© 2020 Microchip Technology Inc.

TABLE 29-1: ADC REGISTER MAP (CONTINUED)

Virtual Address (1F82_#)	Register Name	Bit Range	Bits																All Resets
			31/15	30/14	29/13	28/12	27/11	26/10	25/9	24/8	23/7	22/6	21/5	20/4	19/3	18/2	17/1	16/0	
1290	ADCCMPCON2	31:16	—	—	—	—	—	—	—	—	—	—	—	—	—	—	—	—	0000
		15:0	—	—	—	AINID<4:0>					ENDCMP	DCMPGIEN	DCMPED	IEBTWN	IEHIHI	IEHILO	IELOHI	IELOLO	0000
12E0	ADCFSTAT	31:16	FEN	—	—	—	—	—	—	ADC0EN	FIEN	FRDY	FWROVERR	—	—	—	—	—	0000
		15:0	FCNT<7:0>								FSIGN	—	—	—	—	ADCID<2:0>			0000
12F0	ADCFIFO	31:16	DATA<31:16>																0000
		15:0	DATA<15:0>																0000
1300	ADCBASE	31:16	—	—	—	—	—	—	—	—	—	—	—	—	—	—	—	—	0000
		15:0	ADCBASE<15:0>																0000
1310	ADCDMAST	31:16	DMAEN	—	—	—	—	—	—	RBF0IEN	WROVRERR	—	—	—	—	—	—	RBF0	0000
		15:0	DMACNTEN	—	—	—	—	—	—	RAF0IEN	—	—	—	—	—	—	—	RAF0	0000
1320	ADCCNTB	31:16	ADCCNTB<31:16>																0000
		15:0	ADCCNTB<15:0>																0000
1330	ADCDMAB	31:16	ADDMAB<31:16>																0000
		15:0	ADDMAB<15:0>																0000
1340	ADCTRGSNS	31:16	—	—	—	—	—	—	—	—	—	—	—	—	—	—	—	—	0000
		15:0	—	—	—	—	—	—	—	—	LVL7	LVL6	LVL5	LVL4	LVL3	LVL2	LVL1	LVL0	0000
1350	ADC0TIME	31:16	—	—	—	—	—	—	SELRES<1:0>		BCHEN0	ADCDIV<6:0>							0300
		15:0	—	—	—	—	—	—	SAMC<9:0>										0000
1400	ADCANCON	31:16	—	—	—	—	WKUPCLKCNT<3:0>				WKIEN7	—	—	—	—	—	—	WKIEN0	0000
		15:0	WKRDY7	—	—	—	—	—	—	WKRDY0	ANEN7	—	—	—	—	—	—	ANEN0	0000
1700	ADCSYSCFG0	31:16	—	—	—	—	—	—	—	—	—	—	—	—	AN19	AN18	AN17	AN16	0000
		15:0	AN15	AN14	AN13	AN12	AN11	AN10	AN9	AN8	AN7	AN6	AN5	AN4	AN3	AN2	AN1	AN0	0000
1A00	ADCDATA0	31:16	DATA<31:16>																0000
		15:0	DATA<15:0>																0000
1A10	ADCDATA1	31:16	DATA<31:16>																0000
		15:0	DATA<15:0>																0000
1A20	ADCDATA2	31:16	DATA<31:16>																0000
		15:0	DATA<15:0>																0000
1A30	ADCDATA3	31:16	DATA<31:16>																0000
		15:0	DATA<15:0>																0000
1A40	ADCDATA4	31:16	DATA<31:16>																0000
		15:0	DATA<15:0>																0000
1A50	ADCDATA5	31:16	DATA<31:16>																0000
		15:0	DATA<15:0>																0000
1A60	ADCDATA6	31:16	DATA<31:16>																0000
		15:0	DATA<15:0>																0000
1A70	ADCDATA7	31:16	DATA<31:16>																0000
		15:0	DATA<15:0>																0000

Note 1: All registers in this table (with the exception of ADCDATAx) have corresponding CLR, SET and INV registers at their virtual addresses, plus offsets of 0x4, 0x8 and 0xC, respectively.

© 2020 Microchip Technology Inc.

TABLE 29-1: ADC REGISTER MAP (CONTINUED)

Virtual Address (1F82_#)	Register Name	Bit Range	Bits															All Resets
			31/15	30/14	29/13	28/12	27/11	26/10	25/9	24/8	23/7	22/6	21/5	20/4	19/3	18/2	17/1	16/0	
1A80	ADCDATA8	31:16	DATA<31:16>																0000
		15:0	DATA<15:0>																0000
1A90	ADCDATA9	31:16	DATA<31:16>																0000
		15:0	DATA<15:0>																0000
1AA0	ADCDATA10	31:16	DATA<31:16>																0000
		15:0	DATA<15:0>																0000
1AB0	ADCDATA11	31:16	DATA<31:16>																0000
		15:0	DATA<15:0>																0000
1AC0	ADCDATA12	31:16	DATA<31:16>																0000
		15:0	DATA<15:0>																0000
1AD0	ADCDATA13	31:16	DATA<31:16>																0000
		15:0	DATA<15:0>																0000
1AE0	ADCDATA14	31:16	DATA<31:16>																0000
		15:0	DATA<15:0>																0000
1AF0	ADCDATA15	31:16	DATA<31:16>																0000
		15:0	DATA<15:0>																0000
1B00	ADCDATA16	31:16	DATA<31:16>																0000
		15:0	DATA<15:0>																0000
1B10	ADCDATA17	31:16	DATA<31:16>																0000
		15:0	DATA<15:0>																0000
1B20	ADCDATA18	31:16	DATA<31:16>																0000
		15:0	DATA<15:0>																0000
1B30	ADCDATA19	31:16	DATA<31:16>																0000
		15:0	DATA<15:0>																0000
1B40	ADCDATA20	31:16	DATA<31:16>																0000
		15:0	DATA<15:0>																0000
1B50	ADCDATA21	31:16	DATA<31:16>																0000
		15:0	DATA<15:0>																0000
1B60	ADCDATA22	31:16	DATA<31:16>																0000
		15:0	DATA<15:0>																0000
1B70	ADCDATA23	31:16	DATA<31:16>																0000
		15:0	DATA<15:0>																0000

Note 1: All registers in this table (with the exception of ADCDATAx) have corresponding CLR, SET and INV registers at their virtual addresses, plus offsets of 0x4, 0x8 and 0xC, respectively.

© 2020 Microchip Technology Inc.

REGISTER 29-1: ADCCON1: ADC CONTROL REGISTER 1

Bit Range	Bit 31/23/15/7	Bit 30/22/14/6	Bit 29/21/13/5	Bit 28/20/12/4	Bit 27/19/11/3	Bit 26/18/10/2	Bit 25/17/9/1	Bit 24/16/8/0
31:24	U-0	U-0	U-0	U-0	U-0	U-0	U-0	U-0
	—	—	—	—	—	—	—	—
23:16	R/W-0	R/W-1	R/W-1	R/W-0	R/W-0	R/W-0	R/W-0	R/W-0
	FRACT	SELRES<1:0>		STRGSRC<4:0>				
15:8	R/W-0	U-0	R/W-0	U-0	R/W-0	R/W-0	R/W-0	R/W-0
	ON	—	SIDL	—	CVDEN	FSYDMA	FSYUPB	SCANEN
7:0	U-0		R/W-0	R/W-0	R/W-0	R/W-0	U-0	U-0
	—	IRQVS<2:0>			STRGLVL	DMABL<2:0>		

Legend:	HS = Hardware Set	HC = Hardware Cleared	
R = Readable bit	W = Writable bit	U = Unimplemented bit, read as '0'	
-n = Value at POR	'1' = Bit is set	'0' = Bit is cleared	x = Bit is unknown

bit 31-24 **Unimplemented:** Read as '0'

bit 23 **FRACT:** Fractional Data Output Format bit
1 = Fractional
0 = Integer

bit 22-21 **SELRES<1:0>:** Shared ADC (ADC2) Resolution bits
11 = 12 bits (default)
10 = 10 bits
01 = 8 bits
00 = 6 bits

Note: Changing the resolution of the ADC does not shift the result in the corresponding ADCDATAx register. The result will still occupy 12 bits, with the corresponding lower unused bits set to '0'. For example, a resolution of 6 bits will result in ADCDATAx<5:0> being set to '0', and ADCDATAx<11:6> holding the result.

bit 20-16 **STRGSRC<4:0>:** Scan Trigger Source Select bits
11111 = Reserved
•
•
•
01101 = Reserved
01100 = Comparator 2 (COUT)
01011 = Comparator 1 (COUT)
01010 = OCMP5
01001 = OCMP3
01000 = OCMP1
00111 = TMR5 match
00110 = TMR3 match
00101 = TMR1 match
00100 = INT0 External interrupt
00011 = Reserved
00010 = Global level software trigger (GLSWTRG)
00001 = Global software edge trigger (GSWTRG)
00000 = No Trigger

bit 15 **ON:** ADC Module Enable bit
1 = ADC module is enabled
0 = ADC module is disabled

Note: The ON bit should be set only after the ADC module has been configured.

bit 14 **Unimplemented:** Read as '0'

 © 2020 Microchip Technology Inc.

REGISTER 29-1: ADCCON1: ADC CONTROL REGISTER 1 (CONTINUED)

bit 13 **SIDL:** Stop in Idle Mode bit
1 = Discontinue module operation when device enters Idle mode
0 = Continue module operation in Idle mode

bit 12 **Unimplemented:** Read as '0'

bit 11 **CVDEN:** Capacitive Voltage Division Enable bit
1 = CVD operation is enabled
0 = CVD operation is disabled

bit 10 **FSYDMA:** Fast Synchronous DMA System Clock bit
1 = Fast synchronous DMA system clock is enabled
0 = Fast synchronous DMA system clock is disabled

bit 9 **FSYUPB:** Fast Synchronous UPB Clock bit
1 = Fast synchronous UPB clock is enabled
0 = Fast synchronous UPB clock is disabled

bit 8-7 **Unimplemented:** Read as '0'

bit 6-4 **IRQVS<2:0>:** Interrupt Vector Shift bits
To determine interrupt vector address, this bit specifies the amount of left shift done to the ARDYx status bits in the ADCDSTAT1 and ADCDSTAT2 registers, prior to adding with the ADCBASE register.
Interrupt Vector Address = Read Value of ADCBASE and Read Value of ADCBASE = Value written to ADCBASE + x << IRQVS<2:0>, where 'x' is the smallest active input ID from the ADCDSTAT1 or ADCDSTAT2 registers (which has highest priority).
111 = Shift x left 7 bit position
110 = Shift x left 6 bit position
101 = Shift x left 5 bit position
100 = Shift x left 4 bit position
011 = Shift x left 3 bit position
010 = Shift x left 2 bit position
001 = Shift x left 1 bit position
000 = Shift x left 0 bit position

bit 3 **STRGLVL:** Scan Trigger High Level/Positive Edge Sensitivity bit
1 = Scan trigger is high level sensitive. Once STRIG mode is selected (TRGSRCx<4:0> in the ADCTRGx register), the scan trigger will continue for all selected analog inputs, until the STRIG option is removed.
0 = Scan trigger is positive edge sensitive. Once STRIG mode is selected (TRGSRCx<4:0> in the ADCTRGx register), only a single scan trigger will be generated, which will complete the scan of all selected analog inputs.

bit 2-0 **DMABL<2:0>:** DMA to System RAM Buffer Length Size
Defines the number of locations in system memory allocated per analog input for DMA interface use.
As each output data is 16-bit wide, one location consists of 2 bytes. Therefore the actual size reserved in the system RAM follows the formula:
RAM Buffer Length in bytes = $2_{(DMABL+1)}$

REGISTER 29-2: ADCCON2: ADC CONTROL REGISTER 2

Bit Range	Bit 31/23/15/7	Bit 30/22/14/6	Bit 29/21/13/5	Bit 28/20/12/4	Bit 27/19/11/3	Bit 26/18/10/2	Bit 25/17/9/1	Bit 24/16/8/0
31:24	R-0, HS, HC	R-0, HS, HC	R-0, HS, HC	R/W-0	R/W-0	R/W-0	R/W-0	R/W-0
	BGVRRDY	REFFLT	EOSRDY	CVDCPL<2:0>			SAMC<9:8>	
23:16	R/W-0	R/W-0	R/W-0	R/W-0	R/W-0	R/W-0	R/W-0	R/W-0
	SAMC<7:0>							
15:8	R/W-0	R/W-0	R/W-0	U-0	R/W-0	U-0	U-0	U-0
	BGVRIEN	REFFLTIEN	EOSIEN	—	ENXCNVRT	—	—	—
7:0	U-0	R/W-0	R/W-0	R/W-0	R/W-0	R/W-0	R/W-0	R/W-0
	—	ADCDIV<6:0>						

Legend:	HS = Hardware Set	HC = Hardware Cleared	r = Reserved
R = Readable bit	W = Writable bit	U = Unimplemented bit, read as '0'	
-n = Value at POR	'1' = Bit is set	'0' = Bit is cleared	x = Bit is unknown

bit 31 **BGVRRDY:** Band Gap Voltage/ADC Reference Voltage Status bit
1 = Both band gap voltage and ADC reference voltages (V_{REF}) are ready
0 = Either or both band gap voltage and ADC reference voltages (V_{REF}) are not ready

Data processing is valid only after BGVRRDY is set by hardware, so the application code must check that the BGVRRDY bit is set to ensure data validity. This bit set to '0' when ON (ADCCON1<15>) = 0.

bit 30 **REFFLT:** Band Gap/V_{REF}/AV_{DD} BOR Fault Status bit
1 = Fault in band gap or the V_{REF} voltage while the ON bit (ADCCON1<15>) was set. Most likely a band gap or V_{REF} fault will be caused by a BOR of the analog V_{DD} supply.
0 = Band gap and V_{REF} voltage are working properly

This bit is cleared when the ON bit (ADCCON1<15>) = 0 and the BGVRRDY bit = 1.

bit 29 **EOSRDY:** End of Scan Interrupt Status bit
1 = All analog inputs are considered for scanning through the scan trigger (all analog inputs specified in the ADCCSS1 and ADCCSS2 registers) have completed scanning
0 = Scanning has not completed

This bit is cleared when ADCCON2<31:24> are read in software.

bit 28-26 **CVDCPL<2:0>:** Capacitor Voltage Divider (CVD) Setting bits
111 = 7 * 2.5 pF = 17.5 pF
110 = 6 * 2.5 pF = 15 pF
101 = 5 * 2.5 pF = 12.5 pF
100 = 4 * 2.5 pF = 10 pF
011 = 3 * 2.5 pF = 7.5 pF
010 = 2 * 2.5 pF = 5 pF
001 = 1 * 2.5 pF = 2.5 pF
000 = 0 * 2.5 pF = 0 pF

bit 25-16 **SAMC<9:0>:** Sample Time for the Shared ADC (ADC2) bits
1111111111 = 1025 T_{AD7}
•
•
•
0000000001 = 3 T_{AD7}
0000000000 = 2 T_{AD7}

Where T_{AD7} = period of the ADC conversion clock for the Shared ADC (ADC2) controlled by the ADCDIV<6:0> bits.

bit 15 **BGVRIEN:** Band Gap/V_{REF} Voltage Ready Interrupt Enable bit
1 = Interrupt will be generated when the BGVRDDY bit is set
0 = No interrupt is generated when the BGVRRDY bit is set

 © 2020 Microchip Technology Inc.

REGISTER 29-2: ADCCON2: ADC CONTROL REGISTER 2 (CONTINUED)

bit 14 **REFFLTIEN:** Band Gap/VREF Voltage Fault Interrupt Enable bit
1 = Interrupt will be generated when the REFFLT bit is set
0 = No interrupt is generated when the REFFLT bit is set

bit 13 **EOSIEN:** End of Scan Interrupt Enable bit
1 = Interrupt will be generated when EOSRDY bit is set
0 = No interrupt is generated when the EOSRDY bit is set

bit 12 **Unimplemented:** Read as '0'

bit 11 **ENXCNVRT:** Enable External Conversion Request Interface
Setting this bit will enable another module (such as the PTG) to specify and request conversion of an ADC input.

Note: The external module (such as the PTG) is responsible for asserted only the proper trigger signals. This ADC module has no method to block specific trigger requests from the external module.

bit 10-7 **Unimplemented:** Read as '0'

bit 6-0 **ADCDIV<6:0>:** Division Ratio for the Shared SAR ADC Core Clock bits
1111111 = 254 * TQ = TAD2
•
•
•
0000011 = 6 * TQ = TAD2
0000010 = 4 * TQ = TAD2
0000001 = 2 * TQ = TAD2
0000000 = Reserved

The ADCDIV<6:0> bits divide the ADC control clock (T_Q) to generate the clock for the shared SAR ADC.

REGISTER 29-3: ADCCON3: ADC CONTROL REGISTER 3

Bit Range	Bit 31/23/15/7	Bit 30/22/14/6	Bit 29/21/13/5	Bit 28/20/12/4	Bit 27/19/11/3	Bit 26/18/10/2	Bit 25/17/9/1	Bit 24/16/8/0
31:24	R/W-0	R/W-0	R/W-0	R/W-0	R/W-0	R/W-0	R/W-0	R/W-0
	ADCSEL<1:0>		CONCLKDIV<5:0>					
23:16	R/W-0	U-0	U-0	U-0	U-0	U-0	U-0	R/W-0
	DIGEN7	—	—	—	—	—	—	DIGEN0
15:8	R/W-0	R/W-0	R/W-0	R/W-0	R/W-0	R-0, HS, HC	R/W-0	R-0, HS, HC
	VREFSEL<2:0>			TRGSUSP	UPDIEN	UPDRDY	SAMP(1,2,3,4)	RQCNVRT
7:0	R/W-0	R/W-0, HC	R/W-0	R/W-0	R/W-0	R/W-0	R/W-0	R/W-0
	GLSWTRG	GSWTRG	ADINSEL<5:0>					

Legend:	HS = Hardware Set	HC = Hardware Cleared	r = Reserved
R = Readable bit	W = Writable bit	U = Unimplemented bit, read as '0'	
-n = Value at POR	'1' = Bit is set	'0' = Bit is cleared	x = Bit is unknown

bit 31-30 **ADCSEL<1:0>:** Analog-to-Digital Clock Source (T_{CLK}) bits
00 = Peripheral Bus Clock
01 = FRC Clock
10 = REFO3 Clock Output
11 = System Clock (SYS_CLK)

bit 29-24 **CONCLKDIV<5:0>:** Analog-to-Digital Control Clock (T_Q) Divider bits
111111 = 64 * TCLK = TQ
•
•
•
000011 = 4 * TCLK = TQ
000010 = 3 * TCLK = TQ
000001 = 2 * TCLK = TQ
000000 = TCLK = TQ

bit 23 **DIGEN7:** Shared ADC (ADC2) Digital Enable bit
1 = ADC2 is digital enabled
0 = ADC2 is digital disabled

bit 22-17 **Unimplemented:** Read as '0'

bit 16 **DIGEN0:** ADC1 Digital Enable bit
1 = ADC1 is digital enabled
0 = ADC1 is digital disabled

bit 15-13 **VREFSEL<2:0>:** Voltage Reference (VREF) Input Selection bits

VREFSEL<2:0>	ADREF+	ADREF-
000	AVDD	AVss
001-111	RESERVED FOR FUTURE USE	

bit 12 **TRGSUSP:** Trigger Suspend bit
1 = Triggers are blocked from starting a new analog-to-digital conversion, but the ADC module is not disabled
0 = Triggers are not blocked

bit 11 **UPDIEN:** Update Ready Interrupt Enable bit
1 = Interrupt will be generated when the UPDRDY bit is set by hardware
0 = No interrupt is generated

bit 10 **UPDRDY:** ADC Update Ready Status bit
1 = ADC SFRs can be updated
0 = ADC SFRs cannot be updated

Note: This bit is only active while the TRGSUSP bit is set and there are no more running conversions of any ADC modules.

 © 2020 Microchip Technology Inc.

REGISTER 29-3: ADCCON3: ADC CONTROL REGISTER 3 (CONTINUED)

bit 9 **SAMP:** Class 2 and Class 3 Analog Input Sampling Enable bit(1,2,3,4)

1 = ADC S&H amplifier is sampling
0 = ADC S&H amplifier is holding

Note 1: The SAMP bit has the highest priority and setting this bit will keep the S&H circuit in Sample mode until the bit is cleared. Also, usage of the SAMP bit will cause settings of SAMC<9:0> bits (ADCCON2<25:16>) to be ignored.

2: The SAMP bit only connects Class 2 and Class 3 analog inputs to the shared ADC. All Class 1 analog inputs are not affected by the SAMP bit.

3: The SAMP bit is not a self-clearing bit and it is the responsibility of application software to first clear this bit and only after setting the RQCNVRT bit to start the analog-to-digital conversion.

4: Normally, when the SAMP and RQCNVRT bits are used by software routines, all TRGSRCx<4:0> bits and STRGSRC<4:0> bits should be set to '00000' to disable all external hardware triggers and prevent them from interfering with the software-controlled sampling command signal SAMP and with the software-controlled trigger RQCNVRT.

bit 8 **RQCNVRT:** Individual ADC Input Conversion Request bit

This bit and its associated ADINSEL<5:0> bits enable the user to individually request an analog-to-digital conversion of an analog input through software.

1 = Trigger the conversion of the selected ADC input as specified by the ADINSEL<5:0> bits
0 = Do not trigger the conversion

Note: This bit is automatically cleared in the next ADC clock cycle.

bit 7 **GLSWTRG:** Global Level Software Trigger bit

1 = Trigger conversion for ADC inputs that have selected the GLSWTRG bit as the trigger signal, either through the associated TRGSRC<4:0> bits in the ADCTRGx registers or through the STRGSRC<4:0> bits in the ADCCON1 register
0 = Do not trigger an analog-to-digital conversion

bit 6 **GSWTRG:** Global Software Trigger bit

1 = Trigger conversion for ADC inputs that have selected the GSWTRG bit as the trigger signal, either through the associated TRGSRC<4:0> bits in the ADCTRGx registers or through the STRGSRC<4:0> bits in the ADCCON1 register
0 = Do not trigger an analog-to-digital conversion

Note: This bit is automatically cleared in the next ADC clock cycle.

bit 5-0 **ADINSEL<5:0>:** Analog Input Select bits

These bits select the analog input to be converted when the RQCNVRT bit is set. As a general rule:

111111 = Reserved
•
•
•
101101 = Reserved
101100 = MAX_AN_INPUT + 2 = IV_{TEMP}
101011 = MAX_AN_INPUT + 1 = IV_{REF}
101010 = MAX_AN_INPUT = AN[MAX_AN_INPUT]
•
•
•
000001 = AN1
000000 = AN0

REGISTER 29-4: ADCTRGMODE: ADC TRIGGERING MODE FOR DEDICATED ADC REGISTER

Bit Range	Bit 31/23/15/7	Bit 30/22/14/6	Bit 29/21/13/5	Bit 28/20/12/4	Bit 27/19/11/3	Bit 26/18/10/2	Bit 25/17/9/1	Bit 24/16/8/0
31:24	U-0	U-0	U-0	U-0	U-0	U-0	U-0	U-0
	—	—	—	—	—	—	—	—
23:16	U-0	U-0	U-0	U-0	U-0	U-0	R/W-0	R/W-0
	—	—	—	—	—	—	SH0ALT<1:0>	
15:8	U-0	U-0	U-0	U-0	U-0	U-0	U-0	R/W-0
	—	—	—	—	—	—	—	STRGEN0
7:0	U-0	U-0	U-0	U-0	U-0	U-0	U-0	R/W-0
	—	—	—	—	—	—	—	SSAMPEN0

Legend:			
R = Readable bit	W = Writable bit	U = Unimplemented bit, read as '0'	
-n = Value at POR	'1' = Bit is set	'0' = Bit is cleared	x = Bit is unknown

bit 31-26 **Unimplemented:** Read as '0'

bit 17-16 **SH0ALT<1:0>:** ADC1 Analog Input Select bits
- 11 = Reserved
- 10 = Reserved
- 01 = AN45
- 00 = AN0

bit 15-9 **Unimplemented:** Read as '0'

bit 8 **STRGEN0:** ADC1 Presynchronized Triggers bit
- 1 = ADC1 uses presynchronized triggers
- 0 = ADC1 does not use presynchronized triggers

bit 7-1 **Unimplemented:** Read as '0'

bit 0 **SSAMPEN0:** ADC1 Synchronous Sampling bit
- 1 = ADC1 uses synchronous sampling for the first sample after being idle or disabled
- 0 = ADC1 does not use synchronous sampling

 © 2020 Microchip Technology Inc.

REGISTER 29-5: ADCIMCON1: ADC INPUT MODE CONTROL REGISTER 1

Bit Range	Bit 31/23/15/7	Bit 30/22/14/6	Bit 29/21/13/5	Bit 28/20/12/4	Bit 27/19/11/3	Bit 26/18/10/2	Bit 25/17/9/1	Bit 24/16/8/0
31:24	R/W-0	R/W-0	R/W-0	R/W-0	R/W-0	R/W-0	R/W-0	R/W-0
	DIFF15	SIGN15	DIFF14	SIGN14	DIFF13	SIGN13	DIFF12	SIGN12
23:16	R/W-0	R/W-0	R/W-0	R/W-0	R/W-0	R/W-0	R/W-0	R/W-0
	DIFF11	SIGN11	DIFF10	SIGN10	DIFF9	SIGN9	DIFF8	SIGN8
15:8	R/W-0	R/W-0	R/W-0	R/W-0	R/W-0	R/W-0	R/W-0	R/W-0
	DIFF7	SIGN7	DIFF6	SIGN6	DIFF5	SIGN5	DIFF4	SIGN4
7:0	R/W-0	R/W-0	R/W-0	R/W-0	R/W-0	R/W-0	R/W-0	R/W-0
	DIFF3	SIGN3	DIFF2	SIGN2	DIFF1	SIGN1	DIFF0	SIGN0

Legend:			
R = Readable bit	W = Writable bit	U = Unimplemented bit, read as '0'	
-n = Value at POR	'1' = Bit is set	'0' = Bit is cleared	x = Bit is unknown

bit 31 **DIFF15:** AN15 Mode bit
1 = AN15 is using Differential mode
0 = AN15 is using Single-ended mode

bit 30 **SIGN:15** AN15 Signed Data Mode bit
1 = AN15 is using Signed Data mode
0 = AN15 is using Unsigned Data mode

bit 29 **DIFF14:** AN14 Mode bit
1 = AN14 is using Differential mode
0 = AN14 is using Single-ended mode

bit 28 **SIGN14:** AN14 Signed Data Mode bit
1 = AN14 is using Signed Data mode
0 = AN14 is using Unsigned Data mode

bit 27 **DIFF13:** AN13 Mode bit
1 = AN13 is using Differential mode
0 = AN13 is using Single-ended mode

bit 26 **SIGN13:** AN13 Signed Data Mode bit
1 = AN13 is using Signed Data mode
0 = AN13 is using Unsigned Data mode

bit 25 **DIFF12:** AN12 Mode bit
1 = AN12 is using Differential mode
0 = AN12 is using Single-ended mode

bit 24 **SIGN12:** AN12 Signed Data Mode bit
1 = AN12 is using Signed Data mode
0 = AN12 is using Unsigned Data mode

bit 23 **DIFF11:** AN11 Mode bit
1 = AN11 is using Differential mode
0 = AN11 is using Single-ended mode

bit 22 **SIGN11:** AN11 Signed Data Mode bit
1 = AN11 is using Signed Data mode
0 = AN11 is using Unsigned Data mode

bit 21 **DIFF10:** AN10 Mode bit
1 = AN10 is using Differential mode
0 = AN10 is using Single-ended mode

REGISTER 29-5: ADCIMCON1: ADC INPUT MODE CONTROL REGISTER 1 (CONTINUED)

bit 20 **SIGN10:** AN10 Signed Data Mode bit
1 = AN10 is using Signed Data mode
0 = AN10 is using Unsigned Data mode

bit 19 **DIFF9:** AN9 Mode bit
1 = AN9 is using Differential mode
0 = AN9 is using Single-ended mode

bit 18 **SIGN9:** AN9 Signed Data Mode bit
1 = AN9 is using Signed Data mode
0 = AN9 is using Unsigned Data mode

bit 17 **DIFF8:** AN 8 Mode bit
1 = AN8 is using Differential mode
0 = AN8 is using Single-ended mode

bit 16 **SIGN8:** AN8 Signed Data Mode bit
1 = AN8 is using Signed Data mode
0 = AN8 is using Unsigned Data mode

bit 15 **DIFF7:** AN7 Mode bit
1 = AN7 is using Differential mode
0 = AN7 is using Single-ended mode

bit 14 **SIGN7:** AN7 Signed Data Mode bit
1 = AN7 is using Signed Data mode
0 = AN7 is using Unsigned Data mode

bit 13 **DIFF6:** AN6 Mode bit
1 = AN6 is using Differential mode
0 = AN6 is using Single-ended mode

bit 12 **SIGN6:** AN6 Signed Data Mode bit
1 = AN6 is using Signed Data mode
0 = AN6 is using Unsigned Data mode

bit 11 **DIFF5:** AN5 Mode bit
1 = AN5 is using Differential mode
0 = AN5 is using Single-ended mode

bit 10 **SIGN5:** AN5 Signed Data Mode bit
1 = AN5 is using Signed Data mode
0 = AN5 is using Unsigned Data mode

bit 9 **DIFF4:** AN4 Mode bit
1 = AN4 is using Differential mode
0 = AN4 is using Single-ended mode

bit 8 **SIGN4:** AN4 Signed Data Mode bit
1 = AN4 is using Signed Data mode
0 = AN4 is using Unsigned Data mode

bit 7 **DIFF3:** AN3 Mode bit
1 = AN3 is using Differential mode
0 = AN3 is using Single-ended mode

bit 6 **SIGN3:** AN3 Signed Data Mode bit
1 = AN3 is using Signed Data mode
0 = AN3 is using Unsigned Data mode

bit 5 **DIFF2:** AN2 Mode bit
1 = AN2 is using Differential mode
0 = AN2 is using Single-ended mode

 © 2020 Microchip Technology Inc.

REGISTER 29-5: ADCIMCON1: ADC INPUT MODE CONTROL REGISTER 1 (CONTINUED)

bit 4 **SIGN2:** AN2 Signed Data Mode bit
1 = AN2 is using Signed Data mode
0 = AN2 is using Unsigned Data mode

bit 3 **DIFF1:** AN1 Mode bit
1 = AN1 is using Differential mode
0 = AN1 is using Single-ended mode

bit 2 **SIGN1:** AN1 Signed Data Mode bit
1 = AN1 is using Signed Data mode
0 = AN1 is using Unsigned Data mode

bit 1 **DIFF0:** AN0 Mode bit
1 = AN0 is using Differential mode
0 = AN0 is using Single-ended mode

bit 0 **SIGN0:** AN0 Signed Data Mode bit
1 = AN0 is using Signed Data mode
0 = AN0 is using Unsigned Data mode

REGISTER 29-6: ADCIMCON2: ADC INPUT MODE CONTROL REGISTER 2

Bit Range	Bit 31/23/15/7	Bit 30/22/14/6	Bit 29/21/13/5	Bit 28/20/12/4	Bit 27/19/11/3	Bit 26/18/10/2	Bit 25/17/9/1	Bit 24/16/8/0
31:24	U-0	U-0	U-0	U-0	U-0	U-0	U-0	U-0
	—	—	—	—	—	—	—	—
23:16	U-0	U-0	U-0	U-0	U-0	U-0	U-0	U-0
	—	—	—	—	—	—	—	—
15:8	U-0	U-0	U-0	U-0	U-0	U-0	U-0	U-0
	—	—	—	—	—	—	—	—
7:0	R/W-0	R/W-0	R/W-0	R/W-0	R/W-0	R/W-0	R/W-0	R/W-0
	DIFF19	SIGN19	DIFF18	SIGN18	DIFF17	SIGN17	DIFF16	SIGN16

Legend:			
R = Readable bit	W = Writable bit	U = Unimplemented bit, read as '0'	
-n = Value at POR	'1' = Bit is set	'0' = Bit is cleared	x = Bit is unknown

bit 31-8 **Unimplemented:** Read as '0'

bit 7 **DIFF19:** AN19 Mode bit
1 = AN19 is using Differential mode
0 = AN19 is using Single-ended mode

bit 6 **SIGN19:** AN19 Signed Data Mode bit
1 = AN19 is using Signed Data mode
0 = AN19 is using Unsigned Data mode

bit 5 **DIFF18:** AN18 Mode bit
1 = AN18 is using Differential mode
0 = AN18 is using Single-ended mode

bit 4 **SIGN18:** AN18 Signed Data Mode bit
1 = AN18 is using Signed Data mode
0 = AN18 is using Unsigned Data mode

bit 3 **DIFF17:** AN17 Mode bit
1 = AN17 is using Differential mode
0 = AN17 is using Single-ended mode

bit 2 **SIGN17:** AN17 Signed Data Mode bit
1 = AN17 is using Signed Data mode
0 = AN17 is using Unsigned Data mode

bit 1 **DIFF16:** AN16 Mode bit
1 = AN16 is using Differential mode
0 = AN16 is using Single-ended mode

bit 0 **SIGN16:** AN16 Signed Data Mode bit
1 = AN16 is using Signed Data mode
0 = AN16 is using Unsigned Data mode

 © 2020 Microchip Technology Inc.

REGISTER 29-7: ADCGIRQEN1: ADC GLOBAL INTERRUPT ENABLE REGISTER 1

Bit Range	Bit 31/23/15/7	Bit 30/22/14/6	Bit 29/21/13/5	Bit 28/20/12/4	Bit 27/19/11/3	Bit 26/18/10/2	Bit 25/17/9/1	Bit 24/16/8/0
31:24	U-0	U-0	U-0	U-0	U-0	U-0	U-0	U-0
	—	—	—	—	—	—	—	—
23:16	U-0	U-0	U-0	U-0	U-0	U-0	U-0	U-0
	—	—	—	—	AGIEN19	AGIEN18	AGIEN17	AGIEN16
15:8	R/W-0	R/W-0	R/W-0	R/W-0	R/W-0	R/W-0	R/W-0	R/W-0
	AGIEN15	AGIEN14	AGIEN13	AGIEN12	AGIEN11	AGIEN10	AGIEN9	AGIEN8
7:0	R/W-0	R/W-0	R/W-0	R/W-0	R/W-0	R/W-0	R/W-0	R/W-0
	AGIEN7	AGIEN6	AGIEN5	AGIEN4	AGIEN3	AGIEN2	AGIEN1	AGIEN0

Legend:			
R = Readable bit	W = Writable bit	U = Unimplemented bit, read as '0'	
-n = Value at POR	'1' = Bit is set	'0' = Bit is cleared	x = Bit is unknown

bit 31-16 **Unimplemented:** Read as '0'

bit 15-0 **AGIEN<19:0>:** ADC Global Interrupt Enable bits

1 = Interrupts are enabled for the selected analog input. The interrupt is generated after the converted data is ready (indicated by the ARDY*x* bit ('x' = 31-0) of the ADCDSTAT1 register)

0 = Interrupts are disabled

REGISTER 29-8: ADCCSS1: ADC COMMON SCAN SELECT REGISTER 1

Bit Range	Bit 31/23/15/7	Bit 30/22/14/6	Bit 29/21/13/5	Bit 28/20/12/4	Bit 27/19/11/3	Bit 26/18/10/2	Bit 25/17/9/1	Bit 24/16/8/0
31:24	U-0	U-0	U-0	U-0	U-0	U-0	U-0	U-0
	—	—	—	—	—	—	—	—
23:16	U-0	U-0	U-0	U-0	R/W-0	R/W-0	R/W-0	R/W-0
	—	—	—	—	CSS19(1)	CSS18	CSS17	CSS16
15:8	R/W-0	R/W-0	R/W-0	R/W-0	R/W-0	R/W-0	R/W-0	R/W-0
	CSS15	CSS14	CSS13	CSS12	CSS11	CSS10	CSS9	CSS8
7:0	R/W-0	R/W-0	R/W-0	R/W-0	R/W-0	R/W-0	R/W-0	R/W-0
	CSS7	CSS6	CSS5	CSS4	CSS3	CSS2	CSS1	CSS0

Legend:			
R = Readable bit	W = Writable bit	U = Unimplemented bit, read as '0'	
-n = Value at POR	'1' = Bit is set	'0' = Bit is cleared	x = Bit is unknown

bit 31-20 **Unimplemented:** Read as '0'

bit 19-0 **CSS<19:0>:** Analog Common Scan Select bits(1, 2)
1 = Select AN*x* for input scan
0 = Skip AN*x* for input scan

Note 1: In addition to setting the appropriate bits in this register, Class 1 and Class 2 analog inputs must select the STRIG input as the trigger source if they are to be scanned through the CSSx bits. Refer to the bit descriptions in the ADCTRGx registers for selecting the STRIG option.

2: If a Class 1 or Class 2 input is included in the scan by setting the CSSx bit to '1' and by setting the TRGSRCx<4:0> bits to STRIG mode ('0b11), the user application must ensure that no other triggers are generated for that input using the RQCNVRT bit in the ADCCON3 register or the hardware input or any digital filter. Otherwise, the scan behavior is unpredictable.

 © 2020 Microchip Technology Inc.

REGISTER 29-9: ADCDSTAT1: ADC DATA READY STATUS REGISTER 1

Bit Range	Bit 31/23/15/7	Bit 30/22/14/6	Bit 29/21/13/5	Bit 28/20/12/4	Bit 27/19/11/3	Bit 26/18/10/2	Bit 25/17/9/1	Bit 24/16/8/0
31:24	U-0	U-0	U-0	U-0	U-0	U-0	U-0	U-0
	—	—	—	—	—	—	—	—
23:16	U-0	U-0	U-0	U-0	R-0, HS, HC	R-0, HS, HC	R-0, HS, HC	R-0, HS, HC
	—	—	—	—	ARDY19	ARDY18	ARDY17	ARDY16
15:8	R-0, HS, HC	R-0, HS, HC	R-0, HS, HC	R-0, HS, HC	R-0, HS, HC	R-0, HS, HC	R-0, HS, HC	R-0, HS, HC
	ARDY15	ARDY14	ARDY13	ARDY12	ARDY11	ARDY10	ARDY9	ARDY8
7:0	R-0, HS, HC	R-0, HS, HC	R-0, HS, HC	R-0, HS, HC	R-0, HS, HC	R-0, HS, HC	R-0, HS, HC	R-0, HS, HC
	ARDY7	ARDY6	ARDY5	ARDY4	ARDY3	ARDY2	ARDY1	ARDY0

Legend:	HS = Hardware Set	HC = Hardware Cleared	
R = Readable bit	W = Writable bit	U = Unimplemented bit, read as '0'	
-n = Value at POR	'1' = Bit is set	'0' = Bit is cleared	x = Bit is unknown

bit 31-20 **Unimplemented:** Read as '0'

bit 19-0 **ARDY<19:0>:** Conversion Data Ready for Corresponding Analog Input Ready bits

1 = This bit is set when converted data is ready in the data register

0 = This bit is cleared when the associated data register is read

REGISTER 29-10: ADCCMPENx: ADC DIGITAL COMPARATOR 'x' ENABLE REGISTER ('x' = 1 OR 2)

Bit Range	Bit 31/23/15/7	Bit 30/22/14/6	Bit 29/21/13/5	Bit 28/20/12/4	Bit 27/19/11/3	Bit 26/18/10/2	Bit 25/17/9/1	Bit 24/16/8/0
31:24	U-0	U-0	U-0	U-0	U-0	U-0	U-0	U-0
	—	—	—	—	—	—	—	—
23:16	U-0	U-0	U-0	U-0	R/W-0	R/W-0	R/W-0	R/W-0
	—	—	—	—	CMPE19(1)	CMPE18	CMPE17	CMPE16
15:8	R/W-0	R/W-0	R/W-0	R/W-0	R/W-0	R/W-0	R/W-0	R/W-0
	CMPE15	CMPE14	CMPE13	CMPE12	CMPE11	CMPE10	CMPE9	CMPE8
7:0	R/W-0	R/W-0	R/W-0	R/W-0	R/W-0	R/W-0	R/W-0	R/W-0
	CMPE7	CMPE6	CMPE5	CMPE4	CMPE3	CMPE2	CMPE1	CMPE0

Legend:			
R = Readable bit	W = Writable bit	U = Unimplemented bit, read as '0'	
-n = Value at POR	'1' = Bit is set	'0' = Bit is cleared	x = Bit is unknown

bit 31-20 **Unimplemented:** Read as '0'

bit 31-0 **CMPE<19:0>:** ADC Digital Comparator 'x' Enable bits(1,2)

These bits enable conversion results corresponding to the analog input to be processed by the digital comparator. CMPE0 enables AN0, CMPE1 enables AN1, and so on.

Note 1: CMPEx = ANx, where 'x' = 0-19 (Digital Comparator inputs are limited to AN0 through AN19).

2: Changing the bits in this register while the Digital Comparator is enabled (ENDCMP = 1), can result in unpredictable behavior.

 © 2020 Microchip Technology Inc.

REGISTER 29-11: ADCCMPx: ADC DIGITAL COMPARATOR 'x' LIMIT VALUE REGISTER ('x' = 1 OR 2)

Bit Range	Bit 31/23/15/7	Bit 30/22/14/6	Bit 29/21/13/5	Bit 28/20/12/4	Bit 27/19/11/3	Bit 26/18/10/2	Bit 25/17/9/1	Bit 24/16/8/0
31:24	R/W-0	R/W-0	R/W-0	R/W-0	R/W-0	R/W-0	R/W-0	R/W-0
	DCMPHI<15:8>(1,2,3)							
23:16	R/W-0	R/W-0	R/W-0	R/W-0	R/W-0	R/W-0	R/W-0	R/W-0
	DCMPHI<7:0>(1,2,3)							
15:8	R/W-0	R/W-0	R/W-0	R/W-0	R/W-0	R/W-0	R/W-0	R/W-0
	DCMPLO<15:8>(1,2,3)							
7:0	R/W-0	R/W-0	R/W-0	R/W-0	R/W-0	R/W-0	R/W-0	R/W-0
	DCMPLO<7:0>(1,2,3)							

Legend:			
R = Readable bit	W = Writable bit	U = Unimplemented bit, read as '0'	
-n = Value at POR	'1' = Bit is set	'0' = Bit is cleared	x = Bit is unknown

bit 31-16 **DCMPHI<15:0>:** Digital Comparator 'x' High Limit Value bits(1,2,3)
These bits store the high limit value, which is used by digital comparator for comparisons with ADC converted data.

bit 15-0 **DCMPLO<15:0>:** Digital Comparator 'x' Low Limit Value bits(1,2,3)
These bits store the low limit value, which is used by digital comparator for comparisons with ADC converted data.

Note 1: Changing theses bits while the Digital Comparator is enabled (ENDCMP = 1) can result in unpredictable behavior.

2: The format of the limit values should match the format of the ADC converted value in terms of sign and fractional settings.

3: For Digital Comparator 0 used in CVD mode, the DCMPHI<15:0> and DCMPLO<15:0> bits must always be specified in signed format, as the CVD output data is differential and is always signed.

REGISTER 29-12: ADCFLTRx: ADC DIGITAL FILTER 'x' REGISTER ('x' = 1 OR 2)

Bit Range	Bit 31/23/15/7	Bit 30/22/14/6	Bit 29/21/13/5	Bit 28/20/12/4	Bit 27/19/11/3	Bit 26/18/10/2	Bit 25/17/9/1	Bit 24/16/8/0
31:24	R/W-0	R/W-0	R/W-0	R/W-0	R/W-0	R/W-0	R/W-0	R-0, HS, HC
	AFEN	DATA16EN	DFMODE	OVRSAM<2:0>			AFGIEN	AFRDY
23:16	U-0	U-0	U-0	R/W-0	R/W-0	R/W-0	R/W-0	R/W-0
	—	—	—	CHNLID<4:0>				
15:8	R-0, HS, HC	R-0, HS, HC	R-0, HS, HC	R-0, HS, HC	R-0, HS, HC	R-0, HS, HC	R-0, HS, HC	R-0, HS, HC
	FLTRDATA<15:8>							
7:0	R-0, HS, HC	R-0, HS, HC	R-0, HS, HC	R-0, HS, HC	R-0, HS, HC	R-0, HS, HC	R-0, HS, HC	R-0, HS, HC
	FLTRDATA<7:0>							

Legend:	HS = Hardware Set	HC = Hardware Cleared	
R = Readable bit	W = Writable bit	U = Unimplemented bit, read as '0'	
-n = Value at POR	'1' = Bit is set	'0' = Bit is cleared	x = Bit is unknown

bit 31 **AFEN:** Digital Filter 'x' Enable bit
1 = Digital filter is enabled
0 = Digital filter is disabled and the AFRDY status bit is cleared

bit 30 **DATA16EN:** Filter Significant Data Length bit
1 = All 16 bits of the filter output data are significant
0 = Only the first 12 bits are significant, followed by four zeros
Note: This bit is significant only if DFMODE = 1 (Averaging mode) and FRACT (ADCCON1<23>) = 1 (Fractional Output mode).

bit **DFMODE:** ADC Filter Mode bit
1 = Filter 'x' works in Averaging mode
0 = Filter 'x' works in Oversampling Filter mode (default)

bit 28-26 **OVRSAM<2:0>:** Oversampling Filter Ratio bits
If DFMODE is '0':
111 = 128 samples (shift sum 3 bits to right, output data is in 15.1 format)
110 = 32 samples (shift sum 2 bits to right, output data is in 14.1 format)
101 = 8 samples (shift sum 1 bit to right, output data is in 13.1 format)
100 = 2 samples (shift sum 0 bits to right, output data is in 12.1 format)
011 = 256 samples (shift sum 4 bits to right, output data is 16 bits)
010 = 64 samples (shift sum 3 bits to right, output data is 15 bits)
001 = 16 samples (shift sum 2 bits to right, output data is 14 bits)
000 = 4 samples (shift sum 1 bit to right, output data is 13 bits)

If DFMODE is '1':
111 = 256 samples (256 samples to be averaged)
110 = 128 samples (128 samples to be averaged)
101 = 64 samples (64 samples to be averaged)
100 = 32 samples (32 samples to be averaged)
011 = 16 samples (16 samples to be averaged)
010 = 8 samples (8 samples to be averaged)
001 = 4 samples (4 samples to be averaged)
000 = 2 samples (2 samples to be averaged)

bit 25 **AFGIEN:** Digital Filter 'x' Interrupt Enable bit
1 = Digital filter interrupt is enabled and is generated by the AFRDY status bit
0 = Digital filter is disabled

 © 2020 Microchip Technology Inc.

REGISTER 29-12: ADCFLTRx: ADC DIGITAL FILTER 'x' REGISTER ('x' = 1 OR 2) (CONTINUED)

bit 24 **AFRDY:** Digital Filter 'x' Data Ready Status bit
1 = Data is ready in the FLTRDATA<15:0> bits
0 = Data is not ready

Note: This bit is cleared by reading the FLTRDATA<15:0> bits or by disabling the Digital Filter module (by setting AFEN to '0').

bit 23-21 **Unimplemented:** Read as '0'

bit 20-16 **CHNLID<4:0>:** Digital Filter Analog Input Selection bits
These bits specify the analog input to be used as the oversampling filter data source.
11111 = Reserved
•
•
•
01100 = Reserved
01011 = AN11
•
•
•
00010 = AN2
00001 = AN1
00000 = AN0

Note: Only the first 12 analog inputs, Class 1 (AN0-AN11) and Class 2 (AN5-AN11), can use a digital filter.

bit 15-0 **FLTRDATA<15:0>:** Digital Filter 'x' Data Output Value bits
The filter output data is as per the fractional format set in the FRACT bit (ADCCON1<23>). The FRACT bit should not be changed while the filter is enabled. Changing the state of the FRACT bit after the operation of the filter ended will not update the value of the FLTRDATA<15:0> bits to reflect the new format.

REGISTER 29-13: ADCTRG1: ADC TRIGGER SOURCE 1 REGISTER

Bit Range	Bit 31/23/15/7	Bit 30/22/14/6	Bit 29/21/13/5	Bit 28/20/12/4	Bit 27/19/11/3	Bit 26/18/10/2	Bit 25/17/9/1	Bit 24/16/8/0
31:24	U-0	U-0	U-0	R/W-0	R/W-0	R/W-0	R/W-0	R/W-0
	—	—	—	TRGSRC3<4:0>				
23:16	U-0	U-0	U-0	R/W-0	R/W-0	R/W-0	R/W-0	R/W-0
	—	—	—	TRGSRC2<4:0>				
15:8	U-0	U-0	U-0	R/W-0	R/W-0	R/W-0	R/W-0	R/W-0
	—	—	—	TRGSRC1<4:0>				
7:0	U-0	U-0	U-0	R/W-0	R/W-0	R/W-0	R/W-0	R/W-0
	—	—	—	TRGSRC0<4:0>				

Legend:			
R = Readable bit	W = Writable bit	U = Unimplemented bit, read as '0'	
-n = Value at POR	'1' = Bit is set	'0' = Bit is cleared	x = Bit is unknown

bit 31-29 **Unimplemented:** Read as '0'

bit 28-24 **TRGSRC3<4:0>:** Trigger Source for Conversion of Analog Input AN3 Select bits
11111 = Reserved
.
.
.
01101 = Reserved
01100 = Comparator 2 (COUT)
01011 = Comparator 1 (COUT)
01010 = OCMP5
01001 = OCMP3
01000 = OCMP1
00111 = TMR5 match
00110 = TMR3 match
00101 = TMR1 match
00100 = INT0 External interrupt
00011 = STRIG
00010 = Global level software trigger (GLSWTRG)
00001 = Global software edge Trigger (GSWTRG)
00000 = No Trigger

For STRIG, in addition to setting the trigger, it also requires programming of the STRGSRC<4:0> bits (ADCCON1<20:16>) to select the trigger source, and requires the appropriate CSS bits to be set in the ADCCSS*x* registers.

bit 23-21 **Unimplemented:** Read as '0'

bit 20-16 **TRGSRC2<4:0>:** Trigger Source for Conversion of Analog Input AN2 Select bits
See bits 28-24 for bit value definitions.

bit 15-13 **Unimplemented:** Read as '0'

bit 12-8 **TRGSRC1<4:0>:** Trigger Source for Conversion of Analog Input AN1 Select bits
See bits 28-24 for bit value definitions.

bit 7-5 **Unimplemented:** Read as '0'

bit 4-0 **TRGSRC0<4:0>:** Trigger Source for Conversion of Analog Input AN0 Select bits
See bits 28-24 for bit value definitions.

 © 2020 Microchip Technology Inc.

REGISTER 29-14: ADCTRG2: ADC TRIGGER SOURCE 2 REGISTER

Bit Range	Bit 31/23/15/7	Bit 30/22/14/6	Bit 29/21/13/5	Bit 28/20/12/4	Bit 27/19/11/3	Bit 26/18/10/2	Bit 25/17/9/1	Bit 24/16/8/0
31:24	U-0	U-0	U-0	R/W-0	R/W-0	R/W-0	R/W-0	R/W-0
	—	—	—	TRGSRC7<4:0>				
23:16	U-0	U-0	U-0	R/W-0	R/W-0	R/W-0	R/W-0	R/W-0
	—	—	—	TRGSRC6<4:0>				
15:8	U-0	U-0	U-0	R/W-0	R/W-0	R/W-0	R/W-0	R/W-0
	—	—	—	TRGSRC5<4:0>				
7:0	U-0	U-0	U-0	R/W-0	R/W-0	R/W-0	R/W-0	R/W-0
	—	—	—	TRGSRC4<4:0>				

Legend:			
R = Readable bit	W = Writable bit	U = Unimplemented bit, read as '0'	
-n = Value at POR	'1' = Bit is set	'0' = Bit is cleared	x = Bit is unknown

bit 31-29 **Unimplemented:** Read as '0'

bit 28-24 **TRGSRC7<4:0>:** Trigger Source for Conversion of Analog Input AN7 Select bits
11111 = Reserved
•
•
•
01101 = Reserved
01100 = Comparator 2 (COUT)
01011 = Comparator 1 (COUT)
01010 = OCMP5
01001 = OCMP3
01000 = OCMP1
00111 = TMR5 match
00110 = TMR3 match
00101 = TMR1 match
00100 = INT0 External interrupt
00011 = STRIG
00010 = Global level software trigger (GLSWTRG)
00001 = Global software edge Trigger (GSWTRG)
00000 = No Trigger

For STRIG, in addition to setting the trigger, it also requires programming of the STRGSRC<4:0> bits (ADCCON1<20:16>) to select the trigger source, and requires the appropriate CSS bits to be set in the ADCCSS*x* registers.

bit 23-21 **Unimplemented:** Read as '0'

bit 20-16 **TRGSRC6<4:0>:** Trigger Source for Conversion of Analog Input AN6 Select bits
See bits 28-24 for bit value definitions.

bit 15-13 **Unimplemented:** Read as '0'

bit 12-8 **TRGSRC5<4:0>:** Trigger Source for Conversion of Analog Input AN5 Select bits
See bits 28-24 for bit value definitions.

bit 7-5 **Unimplemented:** Read as '0'

bit 4-0 **TRGSRC4<4:0>:** Trigger Source for Conversion of Analog Input AN4 Select bits
See bits 28-24 for bit value definitions.

REGISTER 29-15: ADCCMPCON1: ADC DIGITAL COMPARATOR 1 CONTROL REGISTER

Bit Range	Bit 31/23/15/7	Bit 30/22/14/6	Bit 29/21/13/5	Bit 28/20/12/4	Bit 27/19/11/3	Bit 26/18/10/2	Bit 25/17/9/1	Bit 24/16/8/0
31:24	R-0, HS, HC	R-0, HS, HC	R-0, HS, HC	R-0, HS, HC	R-0, HS, HC	R-0, HS, HC	R-0, HS, HC	R-0, HS, HC
	CVDDATA<15:8>							
23:16	R-0, HS, HC	R-0, HS, HC	R-0, HS, HC	R-0, HS, HC	R-0, HS, HC	R-0, HS, HC	R-0, HS, HC	R-0, HS, HC
	CVDDATA<7:0>							
15:8	U-0	U-0	R-0, HS, HC	R-0, HS, HC	R-0, HS, HC	R-0, HS, HC	R-0, HS, HC	R-0, HS, HC
	—	—	AINID<5:0>					
7:0	R/W-0	R/W-0	R-0, HS, HC	R/W-0	R/W-0	R/W-0	R/W-0	R/W-0
	ENDCMP	DCMPGIEN	DCMPED	IEBTWN	IEHIHI	IEHILO	IELOHI	IELOLO

Legend:	HS = Hardware Set	HC = Hardware Cleared	
R = Readable bit	W = Writable bit	U = Unimplemented bit, read as '0'	
-n = Value at POR	'1' = Bit is set	'0' = Bit is cleared	x = Bit is unknown

bit 31-16 **CVDDATA<15:0>:** CVD Data Status bits

In CVD mode, these bits obtain the CVD differential output data (subtraction of CVD positive and negative measurement), whenever a digital comparator interrupt is generated. The value in these bits is compliant with the FRACT bit (ADCCON1<23>) and is always signed.

bit 15-14 **Unimplemented:** Read as '0'

bit 13-8 **AINID<5:0>:** Digital Comparator 0 Analog Input Identification (ID) bits

When a digital comparator event occurs (DCMPED = 1), these bits identify the analog input being monitored by digital comparator 0.

Note: In normal ADC mode, only analog inputs <31:0> can be processed by the digital comparator 0. The digital comparator 0 also supports the CVD mode, in which all Class 2 and Class 3 analog inputs may be stored in the AINID<5:0> bits.

111111 = Reserved
.
.
.
101101 = Reserved
101100 = AN44 is being monitored
101011 = AN43 is being monitored
.
.
.
000001 = AN1 is being monitored
000000 = AN0 is being monitored

bit 7 **ENDCMP:** Digital Comparator 0 Enable bit

1 = Digital comparator 0 is enabled
0 = Digital comparator 0 is not enabled, and the DCMPED status bit (ADCCMP0CON<5>) is cleared

bit 6 **DCMPGIEN:** Digital Comparator 0 Global Interrupt Enable bit

1 = A Digital comparator 0 interrupt is generated when the DCMPED status bit (ADCCMP0CON<5>) is set
0 = A Digital comparator 0 interrupt is disabled

bit 5 **DCMPED:** Digital Comparator 0 "Output True" Event Status bit

The logical conditions under which the digital comparator gets "True" are defined by the IEBTWN, IEHIHI, IEHILO, IELOHI, and IELOLO bits.

Note: This bit is cleared by reading the AINID<5:0> bits or by disabling the Digital Comparator module (by setting ENDCMP to '0').

1 = Digital comparator 0 output true event has occurred (output of comparator is '1')
0 = Digital comparator 0 output is false (output of comparator is '0')

 © 2020 Microchip Technology Inc.

REGISTER 29-15: ADCCMPCON1: ADC DIGITAL COMPARATOR 1 CONTROL REGISTER (CONTINUED)

bit 4 **IEBTWN:** Between Low/High Digital Comparator 0 Event bit
1 = Generate a digital comparator event when DCMPLO<15:0> bits ≤ DATA<31:0> bits < DCMPHI<15:0> bits
0 = Do not generate a digital comparator event

bit 3 **IEHIHI:** High/High Digital Comparator 0 Event bit
1 = Generate a digital comparator 0 event when DCMPHI<15:0> bits are less than or equal to DATA<31:0> bits
0 = Do not generate an event

bit 2 **IEHILO:** High/Low Digital Comparator 0 Event bit
1 = Generate a digital comparator 0 event when DATA<31:0> bits are less than DCMPHI<15:0> bits
0 = Do not generate an event

bit 1 **IELOHI:** Low/High Digital Comparator 0 Event bit
1 = Generate a digital comparator 0 event when DCMPLO<15:0> bits are less than or equal to DATA<31:0> bits
0 = Do not generate an event

bit 0 **IELOLO:** Low/Low Digital Comparator 0 Event bit
1 = Generate a digital comparator 0 event when DATA<31:0> bits are less than DCMPLO<15:0> bits
0 = Do not generate an event

REGISTER 29-16: ADCCMPCON2: ADC DIGITAL COMPARATOR 2 CONTROL REGISTER

Bit Range	Bit 31/23/15/7	Bit 30/22/14/6	Bit 29/21/13/5	Bit 28/20/12/4	Bit 27/19/11/3	Bit 26/18/10/2	Bit 25/17/9/1	Bit 24/16/8/0
31:24	U-0	U-0	U-0	U-0	U-0	U-0	U-0	U-0
	—	—	—	—	—	—	—	—
23:16	U-0	U-0	U-0	U-0	U-0	U-0	U-0	U-0
	—	—	—	—	—	—	—	—
15:8	U-0	U-0	U-0	R-0, HS, HC	R-0, HS, HC	R-0, HS, HC	R-0, HS, HC	R-0, HS, HC
	—	—	—	AINID<4:0>				
7:0	R/W-0	R/W-0	R-0, HS, HC	R/W-0	R/W-0	R/W-0	R/W-0	R/W-0
	ENDCMP	DCMPGIEN	DCMPED	IEBTWN	IEHIHI	IEHILO	IELOHI	IELOLO

Legend:	HS = Hardware Set	HC = Hardware Cleared	
R = Readable bit	W = Writable bit	U = Unimplemented bit, read as '0'	
-n = Value at POR	'1' = Bit is set	'0' = Bit is cleared	x = Bit is unknown

bit 31-13 **Unimplemented:** Read as '0'

bit 12-8 **AINID<4:0>:** Digital Comparator 1 Analog Input Identification (ID) bits

When a digital comparator event occurs (DCMPED = 1), these bits identify the analog input being monitored by the digital comparator.

Note: Only analog inputs <31:0> can be processed by the Digital Comparator 1

11111 = Reserved
11110 = Reserved
•
•
•
0001 0011 = AN19 is being monitored
•
00001 = AN1 is being monitored
00000 = AN0 is being monitored

bit 7 **ENDCMP:** Digital Comparator 1 Enable bit

1 = Digital comparator 1 is enabled
0 = Digital comparator 1 is not enabled, and the DCMPED status bit (ADCCMP*x*CON<5>) is cleared

bit 6 **DCMPGIEN:** Digital Comparator 1 Global Interrupt Enable bit

1 = A Digital comparator 1 interrupt is generated when the DCMPED status bit (ADCCMP*x*CON<5>) is set
0 = A Digital comparator 1 interrupt is disabled

bit 5 **DCMPED:** Digital Comparator 1 "Output True" Event Status bit

The logical conditions under which the digital comparator gets "True" are defined by the IEBTWN, IEHIHI, IEHILO, IELOHI and IELOLO bits.

Note: This bit is cleared by reading the AINID<5:0> bits (ADCCMP0CON<13:8>) or by disabling the Digital Comparator module (by setting ENDCMP to '0').

1 = Digital comparator 1 output true event has occurred (output of comparator is '1')
0 = Digital comparator 1 output is false (output of comparator is '0')

bit 4 **IEBTWN:** Between Low/High Digital Comparator 1 Event bit

1 = Generate a digital comparator event when the DCMPLO<15:0> bits ≤ DATA<31:0> bits < DCMPHI<15:0> bits
0 = Do not generate a digital comparator event

bit 3 **IEHIHI:** High/High Digital Comparator 1 Event bit

1 = Generate a digital comparator 1 event when the DCMPHI<15:0> bits are less than or equal to DATA<31:0> bits
0 = Do not generate an event

 © 2020 Microchip Technology Inc.

REGISTER 29-16: ADCCMPCON2: ADC DIGITAL COMPARATOR 2 CONTROL REGISTER (CONTINUED)

bit 2 **IEHILO:** High/Low Digital Comparator 1 Event bit
1 = Generate a digital comparator 1 event when the DATA<31:0> bits are less than DCMPHI<15:0> bits
0 = Do not generate an event

bit 1 **IELOHI:** Low/High Digital Comparator 1 Event bit
1 = Generate a digital comparator 1 event when the DCMPLO<15:0> bits are less than or equal to DATA<31:0> bits
0 = Do not generate an event

bit 0 **IELOLO:** Low/Low Digital Comparator 1 Event bit
1 = Generate a digital comparator 1 event when the DATA<31:0> bits are less than DCMPLO<15:0> bits
0 = Do not generate an event

REGISTER 29-17: ADCFSTAT: ADC FIFO STATUS REGISTER

Bit Range	Bit 31/23/15/7	Bit 30/22/14/6	Bit 29/21/13/5	Bit 28/20/12/4	Bit 27/19/11/3	Bit 26/18/10/2	Bit 25/17/9/1	Bit 24/16/8/0
31:24	R/W-0	U-0	U-0	U-0	U-0	U-0	U-0	R/W-0
	FEN	—	—	—	—	—	—	ADC0EN
23:16	R/W-0	R-0, HS, HC	R-0, HS, HC	U-0	U-0	U-0	U-0	U-0
	FIEN	FRDY	FWROVERR	—	—	—	—	—
15:8	R-0	R-0	R-0	R-0	R-0	R-0	R-0	R-0
	FCNT<7:0>							
7:0	R-0	U-0	U-0	U-0	U-0	R-0	R-0	R-0
	FSIGN	—	—	—	—	ADCID<2:0>		

Legend:	HS = Hardware Set	HC = Hardware Cleared	
R = Readable bit	W = Writable bit	U = Unimplemented bit, read as '0'	
-n = Value at POR	'1' = Bit is set	'0' = Bit is cleared	x = Bit is unknown

bit 31 **FEN:** FIFO Enable bit
1 = FIFO is enabled
0 = FIFO is disabled; no data is being saved into the FIFO

bit 30-25 **Unimplemented:** Read as '0'

bit 24 **ADC0EN:** First class channel (0) Enable bit
1 = Converted output data of first class channel (0) is stored in the FIFO
0 = Converted output data of first class channel (0) is not stored in the FIFO

Note: While using FIFO, the output data is additionally stored in the respective output data register (ADCDATA0).

bit 23 **FIEN:** FIFO Interrupt Enable bit
1 = FIFO interrupts are enabled; an interrupt is generated once the FRDY bit is set
0 = FIFO interrupts are disabled

bit 22 **FRDY:** FIFO Data Ready Interrupt Status bit
1 = FIFO has data to be read
0 = No data is available in the FIFO

Note: This bit is cleared when the FIFO output data in ADCFIFO has been read and there is no additional data ready in the FIFO (that is, the FIFO is empty).

bit 21 **FWROVERR:** FIFO Write Overflow Error Status bit
1 = A write overflow error in the FIFO has occurred (circular FIFO)
0 = A write overflow error in the FIFO has not occurred

Note: This bit is cleared after ADCFSTAT<23:16> are read by software.

bit 15-8 **FCNT<7:0>:** FIFO Data Entry Count Status bits
The value in these bits indicates the number of data entries in the FIFO.

bit 7 **FSIGN:** FIFO Sign Setting bit
This bit reflects the sign of data stored in the ADCFIFO register.

bit 6-3 **Unimplemented:** Read as '0'

bit 2-0 **ADCID<2:0>:** First class channel (0) Identifier bits
These bits specify the first class channel whose data is stored in the FIFO.
111 = Reserved
110 = Reserved
101 = Reserved
100 = Reserved
.
.
.
000 = Converted data of first class channel (0) is stored in FIFO

 © 2020 Microchip Technology Inc.

REGISTER 29-18: ADCFIFO: ADC FIFO DATA REGISTER

Bit Range	Bit 31/23/15/7	Bit 30/22/14/6	Bit 29/21/13/5	Bit 28/20/12/4	Bit 27/19/11/3	Bit 26/18/10/2	Bit 25/17/9/1	Bit 24/16/8/0
31:24	R-0	R-0	R-0	R-0	R-0	R-0	R-0	R-0
	DATA<31:24>(1,2)							
23:16	R-0	R-0	R-0	R-0	R-0	R-0	R-0	R-0
	DATA<23:16>(1,2)							
15:8	R-0	R-0	R-0	R-0	R-0	R-0	R-0	R-0
	DATA<15:8>(1,2)							
7:0	R-0	R-0	R-0	R-0	R-0	R-0	R-0	R-0
	DATA<7:0>(1,2)							

Legend:			
R = Readable bit	W = Writable bit	U = Unimplemented bit, read as '0'	
-n = Value at POR	'1' = Bit is set	'0' = Bit is cleared	x = Bit is unknown

bit 31-0 **DATA<31:0>:** FIFO Data Output Value bits(1,2)

Note 1: When an alternate input is used as the input source for a dedicated ADC module, the data output is still read from the Primary input Data Output register.

2: Reading the ADCDATAx register value after changing the FRACT bit converts the data into the format specified by FRACT bit.

Note: When an alternate input is used as the input source for a dedicated ADC module, the data output is still read from the Primary Input Data Output register.

REGISTER 29-19: ADCBASE: ADC BASE REGISTER

Bit Range	Bit 31/23/15/7	Bit 30/22/14/6	Bit 29/21/13/5	Bit 28/20/12/4	Bit 27/19/11/3	Bit 26/18/10/2	Bit 25/17/9/1	Bit 24/16/8/0
31:24	U-0	U-0	U-0	U-0	U-0	U-0	U-0	U-0
	—	—	—	—	—	—	—	—
23:16	U-0	U-0	U-0	U-0	U-0	U-0	U-0	U-0
	—	—	—	—	—	—	—	—
15:8	R/W-0	R/W-0	R/W-0	R/W-0	R/W-0	R/W-0	R/W-0	R/W-0
	ADCBASE<15:8>							
7:0	R/W-0	R/W-0	R/W-0	R/W-0	R/W-0	R/W-0	R/W-0	R/W-0
	ADCBASE<7:0>							

Legend:			
R = Readable bit	W = Writable bit	U = Unimplemented bit, read as '0'	
-n = Value at POR	'1' = Bit is set	'0' = Bit is cleared	x = Bit is unknown

bit 31-0 **Unimplemented:** Read as '0'

bit 15-0 **ADCBASE<15:0>:** ADC ISR Base Address bits

This register, when read, contains the base address of the user's ADC ISR jump table. The interrupt vector address is determined by the IRQVS<2:0> bits of the ADCCON1 register specifying the amount of left shift done to the ARDYx status bits in the ADCDSTAT1 register, prior to adding with ADCBASE register.

Interrupt vector address = Read value of ADCBASE

Read value of ADCBASE = Value written to ADCBASE + x << IRQVS<2:0>, where 'x' is the smallest active analog input ID from the ADCDSTAT1 register (which has highest priority).

 © 2020 Microchip Technology Inc.

REGISTER 29-20: ADCDMAST: ADC DMA STATUS REGISTER

Bit Range	Bit 31/23/15/7	Bit 30/22/14/6	Bit 29/21/13/5	Bit 28/20/12/4	Bit 27/19/11/3	Bit 26/18/10/2	Bit 25/17/9/1	Bit 24/16/8/0
31:24	R/W-0	U-0	U-0	U-0	U-0	U-0	U-0	R/W-0
	DMAEN	—	—	—	—	—	—	RBF0IEN
23:16	R/HS/HC-0	U-0	U-0	U-0	U-0	U-0	U-0	R/HS/C-0
	WROVRERR	—	—	—	—	—	—	RBF0
15:8	R/W-0	U-0	U-0	U-0	U-0	U-0	U-0	R/W-0
	DMACNTEN	—	—	—	—	—	—	RAF0IEN
7:0	U-0	U-0	U-0	U-0	U-0	U-0	U-0	R/HS/C-0
	—	—	—	—	—	—	—	RAF0

Legend:			
R = Readable bit	W = Writable bit	U = Unimplemented bit, read as '0'	
-n = Value at POR	'1' = Bit is set	'0' = Bit is cleared	x = Bit is unknown

bit 31 **DMAEN:** DMA Interface Enable bit

1 = DMA interface is enabled

0 = DMA interface is disabled

When DMAEN == 0, no data is being saved into the DMA FIFO, no SRAM writes occur and the DMA interface logic is being kept in Reset state.

bit 30-25 **Unimplemented:** Read as '0'

bit 24 **RBF0IEN:** RAM Buffer B FULL Interrupt Enable for channel 0.

1 = Interrupts are enabled and generated when the RBFx Status bit is set

0 = Interrupts are disabled

bit 23 **WROVRERR:** Write Overflow Error in the DMA FIFO; set by hardware, cleared by hardware after a software read of the ADDMAST register.

Note: The write always occurs and the old data is being replaced with new data because the software missed reading the old data on time.

bit 22-17 **Unimplemented:** Read as '0'

bit 16 **RBF0:** RAM Buffer B FULL status bit for channel 0. This bit is self-clearing upon being read by software.

bit 15 **DMACNTEN:** DMA Buffer Sample Count Enable bit

The DMA interface will save the current sample count for each buffer in the table starting at the ADCCNTB address after each sample write into the corresponding buffer in the SRAM.

bit 14-9 **Unimplemented:** Read as '0'

bit 8 **RAF0IEN:** RAM Buffer A FULL Interrupt Enable for channel 0.

1 = Interrupts are enabled and generated when the RAFx Status bit is set

0 = Interrupts are disabled

bit 7-1 **Unimplemented:** Read as '0'

bit 0 **RAF0:** RAM Buffer A FULL status bit for channel 0. This bit is self-clearing upon being read by software.

REGISTER 29-21: ADCCNTB: ADC CHANNEL SAMPLE COUNT BASE ADDRESS REGISTER

Bit Range	Bit 31/23/15/7	Bit 30/22/14/6	Bit 29/21/13/5	Bit 28/20/12/4	Bit 27/19/11/3	Bit 26/18/10/2	Bit 25/17/9/1	Bit 24/16/8/0
31:24	R-0	R-0	R-0	R-0	R-0	R-0	R-0	R-0
	ADCCNTB<31:24>							
23:16	R-0	R-0	R-0	R-0	R-0	R-0	R-0	R-0
	ADCCNTB<23:16>							
15:8	R-0	R-0	R-0	R-0	R-0	R-0	R-0	R-0
	ADCCNTB<15:8>							
7:0	R-0	R-0	R-0	R-0	R-0	R-0	R-0	R-0
	ADCCNTB<7:0>							

Legend:			
R = Readable bit	W = Writable bit	U = Unimplemented bit, read as '0'	
-n = Value at POR	'1' = Bit is set	'0' = Bit is cleared	x = Bit is unknown

bit 31-0 **ADCCNTB<31:0>**: ADC Channel Count Base Address: SRAM address for the DMA interface at which to save the first class channel buffer A sample count values into the System RAM.
If first class channel x, x = 0...6, is ready with a new available sample data, and the DMA interface is currently saving data for channel x to RAM Buffer z (where z == 0 means Buffer A and z == 1 means Buffer B, z depending on x), then the DMA interface will increment (+1) the 1 byte count value stored at System RAM address (ADCCNTB + 2*x + z). ADCCNTB works in conjunction with ADDMAB. The DMA interface will use ADCCNTB to save the buffer sample counts only if ADDMAST.DMA_CNT_EN is set to 1.

 © 2020 Microchip Technology Inc.

REGISTER 29-22: ADCDMAB: ADC DMA BASE ADDRESS REGISTER

Bit Range	Bit 31/23/15/7	Bit 30/22/14/6	Bit 29/21/13/5	Bit 28/20/12/4	Bit 27/19/11/3	Bit 26/18/10/2	Bit 25/17/9/1	Bit 24/16/8/0
31:24	R-0	R-0	R-0	R-0	R-0	R-0	R-0	R-0
	ADDMAB<31:24>							
23:16	R-0	R-0	R-0	R-0	R-0	R-0	R-0	R-0
	ADDMAB<23:16>							
15:8	R-0	R-0	R-0	R-0	R-0	R-0	R-0	R-0
	ADDMAB<15:8>							
7:0	R-0	R-0	R-0	R-0	R-0	R-0	R-0	R-0
	ADDMAB<7:0>							

Legend:			
R = Readable bit	W = Writable bit	U = Unimplemented bit, read as '0'	
-n = Value at POR	'1' = Bit is set	'0' = Bit is cleared	x = Bit is unknown

bit 31-0 **ADDMAB<31:0>:** BASE ADDRESS for the DMA interface at which to save first class channels data into the System RAM. If first class channel x, x = 0...6, is ready with a new available sample data, and the DMAI interface is currently saving data for channel x to RAM Buffer z (where z == 0 means Buffer A and z == 1 means Buffer B, z depending on x), and the current DMA x-counter value is y (y depending on x), then the DMA interface will store the 2-byte output data value at System RAM address (ADDMAB + (2*x + z)*$2^{(DMABL+1)}$ + 2*y. Also, if ADDMAST.DMA_CNT_EN is set to 1, the DMA interface will store without delay the value y itself at the System RAM address (ADCCNTB + 2*x + z).

REGISTER 29-23: ADCTRGSNS: ADC TRIGGER LEVEL/EDGE SENSITIVITY REGISTER

Bit Range	Bit 31/23/15/7	Bit 30/22/14/6	Bit 29/21/13/5	Bit 28/20/12/4	Bit 27/19/11/3	Bit 26/18/10/2	Bit 25/17/9/1	Bit 24/16/8/0
31:24	U-0	U-0	U-0	U-0	U-0	U-0	U-0	U-0
	—	—	—	—	—	—	—	—
23:16	U-0	U-0	U-0	U-0	U-0	U-0	U-0	U-0
	—	—	—	—	—	—	—	—
15:8	U-0	U-0	U-0	U-0	U-0	U-0	U-0	U-0
	—	—	—	—	—	—	—	—
7:0	R/W-0	R/W-0	R/W-0	R/W-0	R/W-0	R/W-0	R/W-0	R/W-0
	LVL7	LVL6	LVL5	LVL4	LVL3	LVL2	LVL1	LVL0

Legend:			
R = Readable bit	W = Writable bit	U = Unimplemented bit, read as '0'	
-n = Value at POR	'1' = Bit is set	'0' = Bit is cleared	x = Bit is unknown

bit 31-8 **Unimplemented:** Read as '0'

bit 17-0 **LVL<7:0>:** Trigger Level and Edge Sensitivity bits

1 = Analog input is sensitive to the high level of its trigger (level sensitivity implies retriggering as long as the trigger signal remains high)

0 = Analog input is sensitive to the positive edge of its trigger (this is the value after a Reset)

Note 1: When an alternate input is used as the input source for a dedicated ADC module, the data output is still read from the Primary input Data Output register.

2: Reading the ADCDATAx register value after changing the FRACT bit converts the data into the format specified by FRACT bit.

 © 2020 Microchip Technology Inc.

REGISTER 29-24: ADC0TIME: DEDICATED ADC1 TIMING REGISTER

Bit Range	Bit 31/23/15/7	Bit 30/22/14/6	Bit 29/21/13/5	Bit 28/20/12/4	Bit 27/19/11/3	Bit 26/18/10/2	Bit 25/17/9/1	Bit 24/16/8/0
31:24	U-0	U-0	U-0	U-0	U-0	U-0	R/W-1	R/W-1
	—	—	—	—	—	—	SELRES<1:0>	
23:16	R/W-0	R/W-0	R/W-0	R/W-0	R/W-0	R/W-0	R/W-0	R/W-0
	BCHEN0	ADCDIV<6:0>						
15:8	U-0	U-0	U-0	U-0	U-0	U-0	R/W-0	R/W-0
	—	—	—	—	—	—	SAMC<9:8>	
7:0	R/W-0	R/W-0	R/W-0	R/W-0	R/W-0	R/W-0	R/W-0	R/W-0
	SAMC<7:0>							

Legend:			
R = Readable bit	W = Writable bit	U = Unimplemented bit, read as '0'	
-n = Value at POR	'1' = Bit is set	'0' = Bit is cleared	x = Bit is unknown

bit 31-26 **Unimplemented:** Read as '0'

bit 25-24 **SELRES<1:0>:** ADC1 Resolution Select bits

11 = 12 bits
10 = 10 bits
01 = 8 bits
00 = 6 bits

Note: Changing the resolution of the ADC does not shift the result in the corresponding ADCDATAx register. The result will still occupy 12 bits, with the corresponding lower unused bits set to '0'. For example, a resolution of 6 bits will result in ADCDATAx<5:0> being set to '0', and ADCDATAx<11:6> holding the result.

bit 23 **BCHEN0:** If set to 1 and if ADDMAST.DMAEN == 1, the output data of first class channel 0, will be saved by the DMA interface to the System RAM. If set to 0, this first class channel output data can be retrieved only via ADC SFRs.

bit 22-16 **ADCDIV<6:0>:** ADC1 Clock Divisor bits

These bits divide the ADC control clock with period T_Q to generate the clock for ADC1 (T_{AD1}).

1111111 = 254 * Tq = T_{AD1}
.
.
.
0000011 = 6 * Tq = T_{AD1}
0000010 = 4 * Tq = T_{AD1}
0000001 = 2 * Tq = T_{AD1}
0000000 = Reserved

bit 15-10 **Unimplemented:** Read as '0'

bit 9-0 **SAMC<9:0>:** ADC1 Sample Time bits

Where T_{AD0} = period of the ADC conversion clock for the dedicated ADC controlled by the ADCDIV<6:0> bits.

1111111111 = 1025 T_{AD1}
.
.
.
0000000001 = 3 T_{AD1}
0000000000 = 2 T_{AD1}

REGISTER 29-25: ADCANCON: ADC ANALOG WARM-UP CONTROL REGISTER

Bit Range	Bit 31/23/15/7	Bit 30/22/14/6	Bit 29/21/13/5	Bit 28/20/12/4	Bit 27/19/11/3	Bit 26/18/10/2	Bit 25/17/9/1	Bit 24/16/8/0
31:24	U-0	U-0	U-0	U-0	R/W-0	R/W-0	R/W-0	R/W-0
	—	—	—	—	WKUPCLKCNT<3:0>			
23:16	R/W-0	U-0	U-0	U-0	U-0	U-0	U-0	R/W-0
	WKIEN7	—	—	—	—	—	—	WKIEN0
15:8	R-0, HS, HC	U-0	U-0	U-0	U-0	U-0	U-0	R-0, HS, HC
	WKRDY7	—	—	—	—	—	—	WKRDY0
7:0	R/W-0	U-0	U-0	U-0	U-0	U-0	U-0	R/W-0
	ANEN7	—	—	—	—	—	—	ANEN0

Legend:	HS = Hardware Set	HC = Hardware Cleared	
R = Readable bit	W = Writable bit	U = Unimplemented bit, read as '0'	
-n = Value at POR	'1' = Bit is set	'0' = Bit is cleared	x = Bit is unknown

bit 31-28 **Unimplemented:** Read as '0'

bit 27-24 **WKUPCLKCNT<3:0>:** Wake-up Clock Count bits

These bits represent the number of ADC clocks required to warm-up the ADC module before it can perform conversion. Although the clocks are specific to each ADC, the WKUPCLKCNT bit is common to all ADC modules.

1111 = 2^{15} = 32,768 clocks
•
•
•
0110 = 2^{6} = 64 clocks
0101 = 2^{5} = 32 clocks
0100 = 2^{4} = 16 clocks
0011 = 2^{4} = 16 clocks
0010 = 2^{4} = 16 clocks
0001 = 2^{4} = 16 clocks
0000 = 2^{4} = 16 clocks

bit 23 **WKIEN7:** Shared ADC (ADC2) Wake-up Interrupt Enable bit

1 = Enable interrupt and generate interrupt when the WKRDY2 status bit is set
0 = Disable interrupt

bit 22-17 **Unimplemented:** Read as '0'

bit 16 **WKIEN0:** ADC1 Wake-up Interrupt Enable bit

1 = Enable interrupt and generate interrupt when the WKRDYx status bit is set
0 = Disable interrupt

bit 15 **WKRDY7:** Shared ADC (ADC2) Wake-up Status bit

1 = ADC2 Analog and bias circuitry ready after the wake-up count number $2^{WKUPEXP}$ clocks after setting ANEN2 to '1'
0 = ADC2 Analog and bias circuitry is not ready

Note: This bit is cleared by hardware when the ANEN2 bit is cleared.

bit 14-9 **Unimplemented:** Read as '0'

bit 8 **WKRDY0:** ADC1 Wake-up Status bit

1 = ADC1 Analog and bias circuitry ready after the wake-up count number $2^{WKUPEXP}$ clocks after setting ANEN1 to '1'
0 = ADC1 Analog and bias circuitry is not ready

Note: These bits are cleared by hardware when the ANEN*x* bit is cleared.

 © 2020 Microchip Technology Inc.

REGISTER 29-25: ADCANCON: ADC ANALOG WARM-UP CONTROL REGISTER (CONTINUED)

bit 7 **ANEN7:** Shared ADC (ADC2) Analog and Bias Circuitry Enable bit
1 = Analog and bias circuitry enabled. Once the analog and bias circuit is enabled, the ADC module needs a warm-up time, as defined by the WKUPCLKCNT<3:0> bits.
0 = Analog and bias circuitry disabled

bit 6-1 **Unimplemented:** Read as '0'

bit 0 **ANEN0:** ADC1 Analog and Bias Circuitry Enable bits
1 = Analog and bias circuitry enabled. Once the analog and bias circuit is enabled, the ADC module needs a warm-up time, as defined by the WKUPCLKCNT<3:0> bits.
0 = Analog and bias circuitry disabled

REGISTER 29-26: ADCSYSCFG0: ADC SYSTEM CONFIGURATION REGISTER 0

Bit Range	Bit 31/23/15/7	Bit 30/22/14/6	Bit 29/21/13/5	Bit 28/20/12/4	Bit 27/19/11/3	Bit 26/18/10/2	Bit 25/17/9/1	Bit 24/16/8/0
31:24	U-0	U-0	U-0	U-0	U-0	U-0	U-0	U-0
	—	—	—	—	—	—	—	—
23:16	U-0	U-0	U-0	U-0	R-y	R-1	R-1	R-1
	—	—	—	—	AN19	AN-18	AN-17	AN-16
15:8	R-1	R-1	R-1	R-1	R-1	R-1	R-1	R-1
	AN15	AN14	AN13	AN12	AN11	AN10	AN9	AN8
7:0	R-1	R-1	R-1	R-1	R-1	R-1	R-1	R-1
	AN7	AN6	AN5	AN4	AN3	AN2	AN1	AN0

Legend:		y = POR value is determined by the specific device	
R = Readable bit	W = Writable bit	U = Unimplemented bit, read as '0'	
-n = Value at POR	'1' = Bit is set	'0' = Bit is cleared	x = Bit is unknown

bit 31-20 **Unimplemented:** Read as '0'

bit 19-0 **AN<19:0>:** ADC Analog Input bits

These bits reflect the system configuration and are updated during boot-up time. By reading these read-only bits, the user application can determine whether or not an analog input in the device is available.

 © 2020 Microchip Technology Inc.

REGISTER 29-27: ADCDATAx: ADC OUTPUT DATA REGISTER ('x' = 0 TO 23)

Bit Range	Bit 31/23/15/7	Bit 30/22/14/6	Bit 29/21/13/5	Bit 28/20/12/4	Bit 27/19/11/3	Bit 26/18/10/2	Bit 25/17/9/1	Bit 24/16/8/0
31:24	R-0	R-0	R-0	R-0	R-0	R-0	R-0	R-0
	DATA<31:24>							
23:16	R-0	R-0	R-0	R-0	R-0	R-0	R-0	R-0
	DATA<23:16>							
15:8	R-0	R-0	R-0	R-0	R-0	R-0	R-0	R-0
	DATA<15:8>							
7:0	R-0	R-0	R-0	R-0	R-0	R-0	R-0	R-0
	DATA<7:0>							

Legend:			
R = Readable bit	W = Writable bit	U = Unimplemented bit, read as '0'	
-n = Value at POR	'1' = Bit is set	'0' = Bit is cleared	x = Bit is unknown

bit 31-0 **DATA<31:0>:** ADC Converted Data Output bits

Note 1: When an alternate input is used as the input source for a dedicated ADC module, the data output is still read from the Primary input Data Output register.

2: Reading the ADCDATAx register value after changing the FRACT bit converts the data into the format specified by FRACT bit.

 © 2020 Microchip Technology Inc.

30.0 CONTROLLER AREA NETWORK (CAN)

Note: This data sheet summarizes the features of the PIC32MZ W1 family of devices. It is not intended to be a comprehensive reference source. To complement the information in this data sheet, refer to **Section 34. "Controller Area Network (CAN)"** (DS60001154) in the *"PIC32 Family Reference Manual"*, which is available from the Microchip web site (www.microchip.com/PIC32).

The PIC32MZ W1 device supports one CAN module. The CAN module has the following key features:

- Standards compliance:
  - Full CAN 2.0B compliance
  - Programmable bit rate up to 1 Mbps
- Message reception and transmission:
  - 16 message FIFOs
  - Each FIFO can have up to 32 messages for a total of 512 messages
  - FIFO can be a transmit message FIFO or a receive message FIFO
  - User-defined priority levels for message FIFOs used for transmission
  - 16 acceptance filters for message filtering
  - Three acceptance filter mask registers for message filtering
  - Automatic response to remote transmit request
  - DeviceNet™ addressing support
- Additional features:
  - Loopback, Listen All Messages and Listen Only modes for self-test, system diagnostics and bus monitoring
  - Low-Power Operating modes
  - CAN module is a bus master on the PIC32 System Bus
  - Buffers stored in volatile memory (SRAM)
  - Dedicated time-stamp timer
  - Data-only Message Reception mode
  - Low pulse filter on receive lines for noise immunity

Figure 30-1 illustrates the general structure of the CAN module.

FIGURE 30-1: CAN MODULE BLOCK DIAGRAM

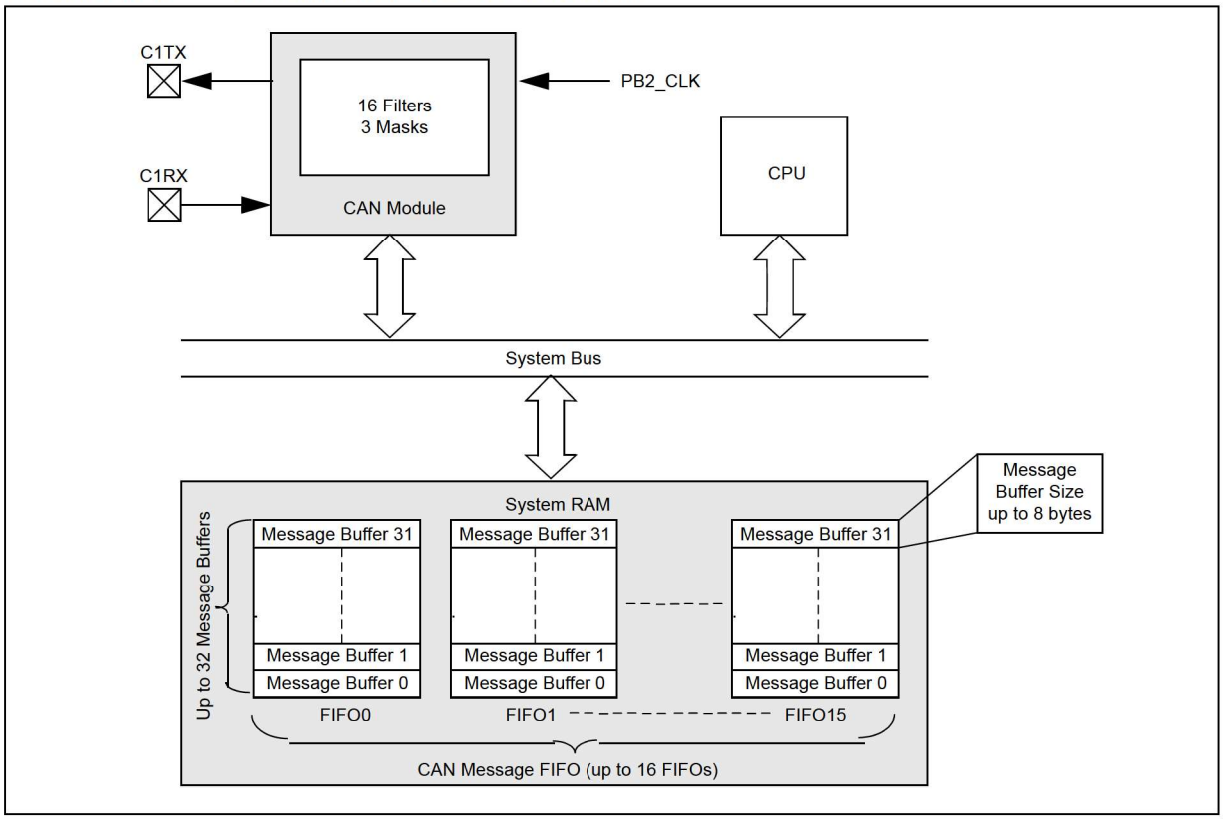

30.1 CAN Control Registers

TABLE 30-1: CAN1 REGISTER SUMMARY

Virtual Address (BF82_#)	Register Name(1)	Bit Range	Bits																All Resets
			31/15	30/14	29/13	28/12	27/11	26/10	25/9	24/8	23/7	22/6	21/5	20/4	19/3	18/2	17/1	16/0	
2000	C1CON	31:16	—	—	—	—	ABAT	REQOP<2:0>			OPMOD<2:0>			CANCAP	—	—	—	—	0480
		15:0	ON	—	SIDLE	—	CANBUSY	—	—	—	—	—	—	DNCNT<4:0>					0000
2010	C1CFG	31:16	—	—	—	—	—	—	—	—	—	WAKFIL	—	—	—	SEG2PH<2:0>			0000
		15:0	SEG2PHTS	SAM	SEG1PH<2:0>			PRSEG<2:0>			SJW<1:0>		BRP<5:0>					0000
2020	C1INT	31:16	IVRIE	WAKIE	CERRIE	SERRIE	RBOVIE	—	—	—	—	—	—	—	MODIE	CTMRIE	RBIE	TBIE	0000
		15:0	IVRIF	WAKIF	CERRIF	SERRIF	RBOVIF	—	—	—	—	—	—	—	MODIF	CTMRIF	RBIF	TBIF	0000
2030	C1VEC	31:16	—	—	—	—	—	—	—	—	—	—	—	—	—	—	—	—	0000
		15:0	—	—	—	FILHIT<4:0>					—	ICODE<6:0>							0040
2040	C1TREC	31:16	—	—	—	—	—	—	—	—	—	—	TXBO	TXBP	RXBP	TXWARN	RXWARN	EWARN	0000
		15:0	TERRCNT<7:0>								RERRCNT<7:0>								0000
2050	C1FSTAT	31:16	FIFOIP31	FIFOIP30	FIFOIP29	FIFOIP28	FIFOIP27	FIFOIP26	FIFOIP25	FIFOIP24	FIFOIP23	FIFOIP22	FIFOIP21	FIFOIP20	FIFOIP19	FIFOIP18	FIFOIP17	FIFOIP16	0000
		15:0	FIFOIP15	FIFOIP14	FIFOIP13	FIFOIP12	FIFOIP11	FIFOIP10	FIFOIP9	FIFOIP8	FIFOIP7	FIFOIP6	FIFOIP5	FIFOIP4	FIFOIP3	FIFOIP2	FIFOIP1	FIFOIP0	0000
2060	C1RXOVF	31:16	RXOVF31	RXOVF30	RXOVF29	RXOVF28	RXOVF27	RXOVF26	RXOVF25	RXOVF24	RXOVF23	RXOVF22	RXOVF21	RXOVF20	RXOVF19	RXOVF18	RXOVF17	RXOVF16	0000
		15:0	RXOVF15	RXOVF14	RXOVF13	RXOVF12	RXOVF11	RXOVF10	RXOVF9	RXOVF8	RXOVF7	RXOVF6	RXOVF5	RXOVF4	RXOVF3	RXOVF2	RXOVF1	RXOVF0	0000
2070	C1TMR	31:16	CANTS<15:0>																0000
		15:0	CANTSPRE<15:0>																0000
2080	C1RXM0	31:16	SID<10:0>											—	MIDE	—	EID<17:16>		xxxx
		15:0	EID<15:0>																xxxx
2090	C1RXM1	31:16	SID<10:0>											—	MIDE	—	EID<17:16>		xxxx
		15:0	EID<15:0>																xxxx
20A0	C1RXM2	31:16	SID<10:0>											—	MIDE	—	EID<17:16>		xxxx
		15:0	EID<15:0>																xxxx
20C0	C1FLTCON0	31:16	FLTEN3	MSEL3<1:0>		FSEL3<4:0>					FLTEN2	MSEL2<1:0>		FSEL2<4:0>					0000
		15:0	FLTEN1	MSEL1<1:0>		FSEL1<4:0>					FLTEN0	MSEL0<1:0>		FSEL0<4:0>					0000
20D0	C1FLTCON1	31:16	FLTEN7	MSEL7<1:0>		FSEL7<4:0>					FLTEN6	MSEL6<1:0>		FSEL6<4:0>					0000
		15:0	FLTEN5	MSEL5<1:0>		FSEL5<4:0>					FLTEN4	MSEL4<1:0>		FSEL4<4:0>					0000
20E0	C1FLTCON2	31:16	FLTEN11	MSEL11<1:0>		FSEL11<4:0>					FLTEN10	MSEL10<1:0>		FSEL10<4:0>					0000
		15:0	FLTEN9	MSEL9<1:0>		FSEL9<4:0>					FLTEN8	MSEL8<1:0>		FSEL8<4:0>					0000
20F0	C1FLTCON3	31:16	FLTEN15	MSEL15<1:0>		FSEL15<4:0>					FLTEN14	MSEL14<1:0>		FSEL14<4:0>					0000
		15:0	FLTEN13	MSEL13<1:0>		FSEL13<4:0>					FLTEN12	MSEL12<1:0>		FSEL12<4:0>					0000
2140-2330	C1RXFn (n = 0-15)	31:16	SID<10:0>											—	EXID	—	EID<17:16>		xxxx
		15:0	EID<15:0>																xxxx
2340	C1FIFOBA	31:16	C1FIFOBA<29:14>																0000
		15:0	C1FIFOBA<13:0>														——	——	0000

Legend: x = unknown value on Reset; — = unimplemented, read as '0'. Reset values are shown in hexadecimal.

Note 1: All registers in this table have corresponding CLR, SET and INV registers at their virtual addresses, plus offsets of 0x4, 0x8 and 0xC, respectively. See **Section 13.3 "CLR, SET, and INV Registers"** for more information.

© 2020 Microchip Technology Inc.

TABLE 30-1: CAN1 REGISTER SUMMARY (CONTINUED)

Virtual Address (BF82_#)	Register Name(1)	Bit Range	Bits															All Resets
			31/15	30/14	29/13	28/12	27/11	26/10	25/9	24/8	23/7	22/6	21/5	20/4	19/3	18/2	17/1	16/0	
2350	C1FIFOCONn (n = 0)	31:16	—	—	—	—	—	—	—	—	—	—	—	FSIZE<4:0>					0000
		15:0	—	FRESET	UINC	DONLY	—	—	—	—	TXEN	TXABAT	TXLARB	TXERR	TXREQ	RTREN	TXPRI<1:0>		0000
2360	C1FIFOINTn (n = 0)	31:16	—	—	—	—	—	TXNFULLIE	TXHALFIE	TXEMPTYIE	—	—	—	—	RXOVFLIE	RXFULLIE	RXHALFIE	RXN EMPTYIE	0000
		15:0	—	—	—	—	—	TXNFULLIF	TXHALFIF	TXEMPTYIF	—	—	—	—	RXOVFLIF	RXFULLIF	RXHALFIF	RXN EMPTYIF	0000
2370	C1FIFOUAn (n = 0)	31:16	C1FIFOUA<15:0>																0000
		15:0	C1FIFOUA<13:0>														—	—	0000
2380	C1FIFOCIn (n = 0)	31:16	—	—	—	—	—	—	—	—	—	—	—	—	—	—	—	—	0000
		15:0	—	—	—	—	—	—	—	—	—	—	—	C1FIFOCI<4:0>					0000
2390-2740	C1FIFOCONn C1FIFOINTn C1FIFOUAn C1FIFOCIn (n = 1-15)	31:16	—	—	—	—	—	—	—	—	—	—	—	FSIZE<4:0>					0000
		15:0	—	FRESET	UINC	DONLY	—	—	—	—	TXEN	TXABAT	TXLARB	TXERR	TXREQ	RTREN	TXPRI<1:0>		0000
		31:16	—	—	—	—	—	TXNFULLIE	TXHALFIE	TXEMPTYIE	—	—	—	—	RXOVFLIE	RXFULLIE	RXHALFIE	RXN EMPTYIE	0000
		15:0	—	—	—	—	—	TXNFULLIF	TXHALFIF	TXEMPTYIF	—	—	—	—	RXOVFLIF	RXFULLIF	RXHALFIF	RXN EMPTYIF	0000
		31:16	C1FIFOUA<15:0>																0000
		15:0	C1FIFOUA<13:0>														—	—	0000
		31:16	—	—	—	—	—	—	—	—	—	—	—	—	—	—	—	—	0000
		15:0	—	—	—	—	—	—	—	—	—	—	—	C1FIFOCI<4:0>					0000

Legend: x = unknown value on Reset; — = unimplemented, read as '0'. Reset values are shown in hexadecimal.

Note 1: All registers in this table have corresponding CLR, SET and INV registers at their virtual addresses, plus offsets of 0x4, 0x8 and 0xC, respectively. See **Section 13.3 "CLR, SET, and INV Registers"** for more information.

© 2020 Microchip Technology Inc.

REGISTER 30-1: C1CON: CAN MODULE CONTROL REGISTER

Bit Range	Bit 31/23/15/7	Bit 30/22/14/6	Bit 29/21/13/5	Bit 28/20/12/4	Bit 27/19/11/3	Bit 26/18/10/2	Bit 25/17/9/1	Bit 24/16/8/0
31:24	U-0	U-0	U-0	U-0	S/HC-0	R/W-1	R/W-0	R/W-0
	—	—	—	—	ABAT	REQOP<2:0>		
23:16	R-1	R-0	R-0	R/W-0	U-0	U-0	U-0	U-0
	OPMOD<2:0>			CANCAP	—	—	—	—
15:8	R/W-0	U-0	R/W-0	U-0	R-0	U-0	U-0	U-0
	ON(1)	—	SIDLE	—	CANBUSY	—	—	—
7:0	U-0	U-0	U-0	R/W-0	R/W-0	R/W-0	R/W-0	R/W-0
	—	—	—	DNCNT<4:0>				

Legend:	HC = Hardware Cleared	S = Settable bit	
R = Readable bit	W = Writable bit	P = Programmable bit	r = Reserved bit
U = Unimplemented bit	-n = Bit Value at POR: (‘0’, ‘1’, x = Unknown)		

bit 31-28 **Unimplemented:** Read as ‘0’

bit 27 **ABAT:** Abort All Pending Transmissions bit
1 = Signal all transmit buffers to abort transmission
0 = Module will clear this bit when all transmissions aborted

bit 26-24 **REQOP<2:0>:** Request Operation Mode bits
111 = Set Listen All Messages mode
110 = Reserved - Do not use
101 = Reserved - Do not use
100 = Set Configuration mode
011 = Set Listen Only mode
010 = Set Loopback mode
001 = Set Disable mode
000 = Set Normal Operation mode

bit 23-21 **OPMOD<2:0>:** Operation Mode Status bits
111 = Module is in Listen All Messages mode
110 = Reserved
101 = Reserved
100 = Module is in Configuration mode
011 = Module is in Listen Only mode
010 = Module is in Loopback mode
001 = Module is in Disable mode
000 = Module is in Normal Operation mode

bit 20 **CANCAP:** CAN Message Receive Time Stamp Timer Capture Enable bit
1 = CANTMR value is stored on valid message reception and is stored with the message
0 = Disable CAN message receive time stamp timer capture and stop CANTMR to conserve power

bit 19-16 **Unimplemented:** Read as ‘0’

bit 15 **ON:** CAN On bit(1)
1 = CAN module is enabled
0 = CAN module is disabled

bit 14 **Unimplemented:** Read as ‘0’

Note 1: If the user application clears the ON bit, it may take a number of cycles before the CAN module completes the current transaction and responds to the request. The user application should poll the CANBUSY bit to verify that the request has been honored.

 © 2020 Microchip Technology Inc.

REGISTER 30-1: C1CON: CAN MODULE CONTROL REGISTER (CONTINUED)

bit 13 **SIDLE:** CAN Stop in Idle bit
1 = CAN Stops operation when system enters Idle mode
0 = CAN continues operation when system enters Idle mode

bit 12 **Unimplemented:** Read as '0'

bit 11 **CANBUSY:** CAN Module is Busy bit
1 = The CAN module is active
0 = The CAN module is completely disabled

bit 10-5 **Unimplemented:** Read as '0'

bit 4-0 **DNCNT<4:0>:** Device Net Filter Bit Number bits
10011-11111 = Invalid Selection (compare up to 18-bits of data with EID)
10010 = Compare up to data byte 2 bit 6 with EID17 (CiRXFn<17>)
•
•
•
00001 = Compare up to data byte 0 bit 7 with EID0 (CiRXFn<0>)
00000 = Do not compare data bytes

Note 1: If the user application clears the ON bit, it may take a number of cycles before the CAN module completes the current transaction and responds to the request. The user application should poll the CANBUSY bit to verify that the request has been honored.

REGISTER 30-2: C1CFG: CAN BAUD RATE CONFIGURATION REGISTER

Bit Range	Bit 31/23/15/7	Bit 30/22/14/6	Bit 29/21/13/5	Bit 28/20/12/4	Bit 27/19/11/3	Bit 26/18/10/2	Bit 25/17/9/1	Bit 24/16/8/0
31:24	U-0	U-0	U-0	U-0	U-0	U-0	U-0	U-0
	—	—	—	—	—	—	—	—
23:16	U-0	R/W-0	U-0	U-0	U-0	R/W-0	R/W-0	R/W-0
	—	WAKFIL	—	—	—	SEG2PH<2:0>(1,4)		
15:8	R/W-0	R/W-0	R/W-0	R/W-0	R/W-0	R/W-0	R/W-0	R/W-0
	SEG2PHTS(1)	SAM(2)	SEG1PH<2:0>			PRSEG<2:0>		
7:0	R/W-0	R/W-0	R/W-0	R/W-0	R/W-0	R/W-0	R/W-0	R/W-0
	SJW<1:0>(3)		BRP<5:0>					

Legend:	HC = Hardware Clear	S = Settable bit	
R = Readable bit	W = Writable bit	P = Programmable bit	r = Reserved bit
U = Unimplemented bit	-n = Bit Value at POR: (‘0’, ‘1’, x = Unknown)		

bit 31-23 **Unimplemented:** Read as ‘0’

bit 22 **WAKFIL:** CAN Bus Line Filter Enable bit
1 = Use CAN bus line filter for wake-up
0 = CAN bus line filter is not used for wake-up

bit 21-19 **Unimplemented:** Read as ‘0’

bit 18-16 **SEG2PH<2:0>:** Phase Buffer Segment 2 bits(1,4)
111 = Length is 8 x TQ
•
•
•
000 = Length is 1 x TQ

bit 15 **SEG2PHTS:** Phase Segment 2 Time Select bit(1)
1 = Freely programmable
0 = Maximum of SEG1PH or Information Processing Time, whichever is greater

bit 14 **SAM:** Sample of the CAN Bus Line bit(2)
1 = Bus line is sampled three times at the sample point
0 = Bus line is sampled once at the sample point

bit 13-11 **SEG1PH<2:0>:** Phase Buffer Segment 1 bits(4)
111 = Length is 8 x TQ
•
•
•
000 = Length is 1 x TQ

Note 1: SEG2PH ≤ SEG1PH. If SEG2PHTS is clear, SEG2PH will be set automatically.
2: 3 Time bit sampling is not allowed for BRP < 2.
3: SJW ≤ SEG2PH.
4: The Time Quanta per bit must be greater than 7 (that is, TQBIT > 7).
5: This register can only be modified when the CAN module is in Configuration mode (OPMOD<2:0> (C1CON<23:21>) = 100).

 © 2020 Microchip Technology Inc.

REGISTER 30-2: C1CFG: CAN BAUD RATE CONFIGURATION REGISTER (CONTINUED)

bit 10-8 **PRSEG<2:0>:** Propagation Time Segment bits(4)
111 = Length is 8 x TQ
•
•
•
000 = Length is 1 x TQ

bit 7-6 **SJW<1:0>:** Synchronization Jump Width bits(3)
11 = Length is 4 x TQ
10 = Length is 3 x TQ
01 = Length is 2 x TQ
00 = Length is 1 x TQ

bit 5-0 **BRP<5:0>:** Baud Rate Prescaler bits
111111 = TQ = (2 x 64)/TPB2_CLK
111110 = TQ = (2 x 63)/TPB2_CLK
•
•
•
000001 = TQ = (2 x 2)/TPB2_CLK
000000 = TQ = (2 x 1)/TPB2_CLK

Note 1: SEG2PH ≤ SEG1PH. If SEG2PHTS is clear, SEG2PH will be set automatically.
2: 3 Time bit sampling is not allowed for BRP < 2.
3: SJW ≤ SEG2PH.
4: The Time Quanta per bit must be greater than 7 (that is, TQBIT > 7).
5: This register can only be modified when the CAN module is in Configuration mode (OPMOD<2:0> (C1CON<23:21>) = 100).

REGISTER 30-3: C1INT: CAN INTERRUPT REGISTER

Bit Range	Bit 31/23/15/7	Bit 30/22/14/6	Bit 29/21/13/5	Bit 28/20/12/4	Bit 27/19/11/3	Bit 26/18/10/2	Bit 25/17/9/1	Bit 24/16/8/0
31:24	R/W-0	R/W-0	R/W-0	R/W-0	R/W-0	U-0	U-0	U-0
	IVRIE	WAKIE	CERRIE	SERRIE	RBOVIE	—	—	—
23:16	U-0	U-0	U-0	U-0	R/W-0	R/W-0	R/W-0	R/W-0
	—	—	—	—	MODIE	CTMRIE	RBIE	TBIE
15:8	R/W-0	R/W-0	R/W-0	R/W-0	R/W-0	U-0	U-0	U-0
	IVRIF	WAKIF	CERRIF	SERRIF(1)	RBOVIF	—	—	—
7:0	U-0	U-0	U-0	U-0	R/W-0	R/W-0	R/W-0	R/W-0
	—	—	—	—	MODIF	CTMRIF	RBIF	TBIF

Legend:			
R = Readable bit	W = Writable bit	U = Unimplemented bit, read as '0'	
-n = Value at POR	'1' = Bit is set	'0' = Bit is cleared	x = Bit is unknown

bit 31 **IVRIE:** Invalid Message Received Interrupt Enable bit
1 = Interrupt request is enabled
0 = Interrupt request is not enabled

bit 30 **WAKIE:** CAN Bus Activity Wake-up Interrupt Enable bit
1 = Interrupt request is enabled
0 = Interrupt request is not enabled

bit 29 **CERRIE:** CAN Bus Error Interrupt Enable bit
1 = Interrupt request is enabled
0 = Interrupt request is not enabled

bit 28 **SERRIE:** System Error Interrupt Enable bit
1 = Interrupt request is enabled
0 = Interrupt request is not enabled

bit 27 **RBOVIE:** Receive Buffer Overflow Interrupt Enable bit
1 = Interrupt request is enabled
0 = Interrupt request is not enabled

bit 26-20 **Unimplemented:** Read as '0'

bit 19 **MODIE:** Mode Change Interrupt Enable bit
1 = Interrupt request is enabled
0 = Interrupt request is not enabled

bit 18 **CTMRIE:** CAN Timestamp Timer Interrupt Enable bit
1 = Interrupt request is enabled
0 = Interrupt request is not enabled

bit 17 **RBIE:** Receive Buffer Interrupt Enable bit
1 = Interrupt request is enabled
0 = Interrupt request is not enabled

bit 16 **TBIE:** Transmit Buffer Interrupt Enable bit
1 = Interrupt request is enabled
0 = Interrupt request is not enabled

bit 15 **IVRIF:** Invalid Message Received Interrupt Flag bit
1 = An invalid messages interrupt has occurred
0 = An invalid message interrupt has not occurred

Note 1: This bit can only be cleared by turning the CAN module off and on by clearing or setting the ON bit (C1CON<15>).

 © 2020 Microchip Technology Inc.

REGISTER 30-3: C1INT: CAN INTERRUPT REGISTER (CONTINUED)

bit 14 **WAKIF:** CAN Bus Activity Wake-up Interrupt Flag bit
1 = A bus wake-up activity interrupt has occurred
0 = A bus wake-up activity interrupt has not occurred

bit 13 **CERRIF:** CAN Bus Error Interrupt Flag bit
1 = A CAN bus error has occurred
0 = A CAN bus error has not occurred

bit 12 **SERRIF:** System Error Interrupt Flag bit
1 = A system error occurred (typically an illegal address was presented to the System Bus)
0 = A system error has not occurred

bit 11 **RBOVIF:** Receive Buffer Overflow Interrupt Flag bit
1 = A receive buffer overflow has occurred
0 = A receive buffer overflow has not occurred

bit 10-4 **Unimplemented:** Read as '0'

bit 3 **MODIF:** CAN Mode Change Interrupt Flag bit
1 = A CAN module mode change has occurred (OPMOD<2:0> has changed to reflect REQOP)
0 = A CAN module mode change has not occurred

bit 2 **CTMRIF:** CAN Timer Overflow Interrupt Flag bit
1 = A CAN timer (CANTMR) overflow has occurred
0 = A CAN timer (CANTMR) overflow has not occurred

bit 1 **RBIF:** Receive Buffer Interrupt Flag bit
1 = A receive buffer interrupt is pending
0 = A receive buffer interrupt is not pending

bit 0 **TBIF:** Transmit Buffer Interrupt Flag bit
1 = A transmit buffer interrupt is pending
0 = A transmit buffer interrupt is not pending

Note 1: This bit can only be cleared by turning the CAN module off and on by clearing or setting the ON bit (C1CON<15>).

REGISTER 30-4: C1VEC: CAN INTERRUPT CODE REGISTER

Bit Range	Bit 31/23/15/7	Bit 30/22/14/6	Bit 29/21/13/5	Bit 28/20/12/4	Bit 27/19/11/3	Bit 26/18/10/2	Bit 25/17/9/1	Bit 24/16/8/0
31:24	U-0	U-0	U-0	U-0	U-0	U-0	U-0	U-0
	—	—	—	—	—	—	—	—
23:16	U-0	U-0	U-0	U-0	U-0	U-0	U-0	U-0
	—	—	—	—	—	—	—	—
15:8	U-0	U-0	U-0	R-0	R-0	R-0	R-0	R-0
	—	—	—	FILHIT<4:0>				
7:0	U-0	R-1	R-0	R-0	R-0	R-0	R-0	R-0
	—	ICODE<6:0>(1)						

Legend:			
R = Readable bit	W = Writable bit	U = Unimplemented bit, read as '0'	
-n = Value at POR	'1' = Bit is set	'0' = Bit is cleared	x = Bit is unknown

bit 31-13 **Unimplemented:** Read as '0'

bit 12-8 **FILHIT<4:0>:** Filter Hit Number bit

11111 = Filter 31
11110 = Filter 30
•
•
•
00001 = Filter 1
00000 = Filter 0

bit 7 **Unimplemented:** Read as '0'

bit 6-0 **ICODE<6:0>:** Interrupt Flag Code bits(1)

1001000-1111111 = Reserved
1001000 = Invalid Message Received (IVRIF)
1000111 = CAN Module Mode Change (MODIF)
1000110 = CAN Timestamp Timer (CTMRIF)
1000101 = Bus Bandwidth Error (SERRIF)
1000100 = Address Error Interrupt (SERRIF)
1000011 = Receive FIFO Overflow Interrupt (RBOVIF)
1000010 = Wake-up interrupt (WAKIF)
1000001 = Error Interrupt (CERRIF)
1000000 = No interrupt
0100000-0111111 = Reserved
0011111 = FIFO31 interrupt (CiFSTAT<31> set)
0011110 = FIFO30 interrupt (CiFSTAT<30> set)
•
•
•
0000001 = FIFO1 interrupt (CiFSTAT<1> set)
0000000 = FIFO0 interrupt (CiFSTAT<0> set)

Note 1: These bits are only updated for enabled interrupts.

 © 2020 Microchip Technology Inc.

REGISTER 30-5: C1TREC: CAN TRANSMIT/RECEIVE ERROR COUNT REGISTER

Bit Range	Bit 31/23/15/7	Bit 30/22/14/6	Bit 29/21/13/5	Bit 28/20/12/4	Bit 27/19/11/3	Bit 26/18/10/2	Bit 25/17/9/1	Bit 24/16/8/0
31:24	U-0	U-0	U-0	U-0	U-0	U-0	U-0	U-0
	—	—	—	—	—	—	—	—
23:16	U-0	U-0	R-0	R-0	R-0	R-0	R-0	R-0
	—	—	TXBO	TXBP	RXBP	TXWARN	RXWARN	EWARN
15:8	R-0	R-0	R-0	R-0	R-0	R-0	R-0	R-0
	TERRCNT<7:0>							
7:0	R-0	R-0	R-0	R-0	R-0	R-0	R-0	R-0
	RERRCNT<7:0>							

Legend:			
R = Readable bit	W = Writable bit	U = Unimplemented bit, read as '0'	
-n = Value at POR	'1' = Bit is set	'0' = Bit is cleared	x = Bit is unknown

bit 31-22 **Unimplemented:** Read as '0'

bit 21 **TXBO:** Transmitter in Error State Bus OFF (TERRCNT ≥ 256)

bit 20 **TXBP:** Transmitter in Error State Bus Passive (TERRCNT ≥ 128)

bit 19 **RXBP:** Receiver in Error State Bus Passive (RERRCNT ≥ 128)

bit 18 **TXWARN:** Transmitter in Error State Warning (128 > TERRCNT ≥ 96)

bit 17 **RXWARN:** Receiver in Error State Warning (128 > RERRCNT ≥ 96)

bit 16 **EWARN:** Transmitter or Receiver is in Error State Warning

bit 15-8 **TERRCNT<7:0>:** Transmit Error Counter

bit 7-0 **RERRCNT<7:0>:** Receive Error Counter

REGISTER 30-6: C1FSTAT: CAN FIFO STATUS REGISTER

Bit Range	Bit 31/23/15/7	Bit 30/22/14/6	Bit 29/21/13/5	Bit 28/20/12/4	Bit 27/19/11/3	Bit 26/18/10/2	Bit 25/17/9/1	Bit 24/16/8/0
31:24	R-0	R-0	R-0	R-0	R-0	R-0	R-0	R-0
	FIFOIP31	FIFOIP30	FIFOIP29	FIFOIP28	FIFOIP27	FIFOIP26	FIFOIP25	FIFOIP24
23:16	R-0	R-0	R-0	R-0	R-0	R-0	R-0	R-0
	FIFOIP23	FIFOIP22	FIFOIP21	FIFOIP20	FIFOIP19	FIFOIP18	FIFOIP17	FIFOIP16
15:8	R-0	R-0	R-0	R-0	R-0	R-0	R-0	R-0
	FIFOIP15	FIFOIP14	FIFOIP13	FIFOIP12	FIFOIP11	FIFOIP10	FIFOIP9	FIFOIP8
7:0	R-0	R-0	R-0	R-0	R-0	R-0	R-0	R-0
	FIFOIP7	FIFOIP6	FIFOIP5	FIFOIP4	FIFOIP3	FIFOIP2	FIFOIP1	FIFOIP0

Legend:			
R = Readable bit	W = Writable bit	U = Unimplemented bit, read as '0'	
-n = Value at POR	'1' = Bit is set	'0' = Bit is cleared	x = Bit is unknown

bit 31-0 **FIFOIP<31:0>:** FIFOx Interrupt Pending bits

1 = One or more enabled FIFO interrupts are pending

0 = No FIFO interrupts are pending

REGISTER 30-7: C1RXOVF: CAN RECEIVE FIFO OVERFLOW STATUS REGISTER

Bit Range	Bit 31/23/15/7	Bit 30/22/14/6	Bit 29/21/13/5	Bit 28/20/12/4	Bit 27/19/11/3	Bit 26/18/10/2	Bit 25/17/9/1	Bit 24/16/8/0
31:24	R-0	R-0	R-0	R-0	R-0	R-0	R-0	R-0
	RXOVF31	RXOVF30	RXOVF29	RXOVF28	RXOVF27	RXOVF26	RXOVF25	RXOVF24
23:16	R-0	R-0	R-0	R-0	R-0	R-0	R-0	R-0
	RXOVF23	RXOVF22	RXOVF21	RXOVF20	RXOVF19	RXOVF18	RXOVF17	RXOVF16
15:8	R-0	R-0	R-0	R-0	R-0	R-0	R-0	R-0
	RXOVF15	RXOVF14	RXOVF13	RXOVF12	RXOVF11	RXOVF10	RXOVF9	RXOVF8
7:0	R-0	R-0	R-0	R-0	R-0	R-0	R-0	R-0
	RXOVF7	RXOVF6	RXOVF5	RXOVF4	RXOVF3	RXOVF2	RXOVF1	RXOVF0

Legend:			
R = Readable bit	W = Writable bit	U = Unimplemented bit, read as '0'	
-n = Value at POR	'1' = Bit is set	'0' = Bit is cleared	x = Bit is unknown

bit 31-0 **RXOVF<31:0>:** FIFOx Receive Overflow Interrupt Pending bit
1 = FIFO has overflowed
0 = FIFO has not overflowed

REGISTER 30-8: C1TMR: CAN TIMER REGISTER

Bit Range	Bit 31/23/15/7	Bit 30/22/14/6	Bit 29/21/13/5	Bit 28/20/12/4	Bit 27/19/11/3	Bit 26/18/10/2	Bit 25/17/9/1	Bit 24/16/8/0
31:24	R/W-0	R/W-0	R/W-0	R/W-0	R/W-0	R/W-0	R/W-0	R/W-0
	CANTS<15:8>							
23:16	R/W-0	R/W-0	R/W-0	R/W-0	R/W-0	R/W-0	R/W-0	R/W-0
	CANTS<7:0>							
15:8	R/W-0	R/W-0	R/W-0	R/W-0	R/W-0	R/W-0	R/W-0	R/W-0
	CANTSPRE<15:8>							
7:0	R/W-0	R/W-0	R/W-0	R/W-0	R/W-0	R/W-0	R/W-0	R/W-0
	CANTSPRE<7:0>							

Legend:			
R = Readable bit	W = Writable bit	U = Unimplemented bit, read as '0'	
-n = Value at POR	'1' = Bit is set	'0' = Bit is cleared	x = Bit is unknown

bit 31-0 **CANTS<15:0>:** CAN Time Stamp Timer bits
This is a free-running timer that increments every CANTSPRE system clocks when the CANCAP bit (CiCON<20>) is set.

bit 15-0 **CANTSPRE<15:0>:** CAN Time Stamp Timer Prescaler bits
1111 1111 1111 1111 = CAN Time Stamp (CANTS) timer increments every 65,535 system clocks
.
.
.
0000 0000 0000 0000 = CAN Time Stamp (CANTS) timer increments every system clock

Note 1: C1TMR will be frozen when CANCAP = 0.
2: The C1TMR prescaler count will be reset on any write to C1TMR (CANTSPRE will be unaffected).

 © 2020 Microchip Technology Inc.

REGISTER 30-9: C1RXMN: CAN ACCEPTANCE FILTER MASK 'n' REGISTER ('n' = 0-2)

Bit Range	Bit 31/23/15/7	Bit 30/22/14/6	Bit 29/21/13/5	Bit 28/20/12/4	Bit 27/19/11/3	Bit 26/18/10/2	Bit 25/17/9/1	Bit 24/16/8/0
31:24	R/W-0	R/W-0	R/W-0	R/W-0	R/W-0	R/W-0	R/W-0	R/W-0
	SID<10:3>							
23:16	R/W-0	R/W-0	R/W-0	U-0	R/W-0	U-0	R/W-0	R/W-0
	SID<2:0>			—	MIDE	—	EID<17:16>	
15:8	R/W-0	R/W-0	R/W-0	R/W-0	R/W-0	R/W-0	R/W-0	R/W-0
	EID<15:8>							
7:0	R/W-0	R/W-0	R/W-0	R/W-0	R/W-0	R/W-0	R/W-0	R/W-0
	EID<7:0>							

Legend:			
R = Readable bit	W = Writable bit	U = Unimplemented bit, read as '0'	
-n = Value at POR	'1' = Bit is set	'0' = Bit is cleared	x = Bit is unknown

bit 31-21 **SID<10:0>:** Standard Identifier bits
1 = Include bit, SIDx, in filter comparison
0 = Bit SIDx is 'don't care' in filter operation

bit 20 **Unimplemented:** Read as '0'

bit 19 **MIDE:** Identifier Receive Mode bit
1 = Match only message types (standard/extended address) that correspond to the EXID bit in filter
0 = Match either standard or extended address message if filters match (that is, if (Filter SID) = (Message SID) or if (FILTER SID/EID) = (Message SID/EID))

bit 18 **Unimplemented:** Read as '0'

bit 17-0 **EID<17:0>:** Extended Identifier bits
1 = Include bit, EIDx, in filter comparison
0 = Bit EIDx is 'don't care' in filter operation

Note: This register can only be modified when the CAN module is in Configuration mode (OPMOD<2:0> (C1CON<23:21>) = 100).

REGISTER 30-10: C1FLTCON0: CAN FILTER CONTROL REGISTER 0

Bit Range	Bit 31/23/15/7	Bit 30/22/14/6	Bit 29/21/13/5	Bit 28/20/12/4	Bit 27/19/11/3	Bit 26/18/10/2	Bit 25/17/9/1	Bit 24/16/8/0
31:24	R/W-0	R/W-0	R/W-0	R/W-0	R/W-0	R/W-0	R/W-0	R/W-0
	FLTEN3	MSEL3<1:0>		FSEL3<4:0>				
23:16	R/W-0	R/W-0	R/W-0	R/W-0	R/W-0	R/W-0	R/W-0	R/W-0
	FLTEN2	MSEL2<1:0>		FSEL2<4:0>				
15:8	R/W-0	R/W-0	R/W-0	R/W-0	R/W-0	R/W-0	R/W-0	R/W-0
	FLTEN1	MSEL1<1:0>		FSEL1<4:0>				
7:0	R/W-0	R/W-0	R/W-0	R/W-0	R/W-0	R/W-0	R/W-0	R/W-0
	FLTEN0	MSEL0<1:0>		FSEL0<4:0>				

Legend:			
R = Readable bit	W = Writable bit	U = Unimplemented bit, read as '0'	
-n = Value at POR	'1' = Bit is set	'0' = Bit is cleared	x = Bit is unknown

bit 31 **FLTEN3:** Filter 3 Enable bit
1 = Filter is enabled
0 = Filter is disabled

bit 30-29 **MSEL3<1:0>:** Filter 3 Mask Select bits
11 = Acceptance Mask 3 selected
10 = Acceptance Mask 2 selected
01 = Acceptance Mask 1 selected
00 = Acceptance Mask 0 selected

bit 28-24 **FSEL3<4:0>:** FIFO Selection bits
11111 = Message matching filter is stored in FIFO buffer 31
11110 = Message matching filter is stored in FIFO buffer 30
•
•
•
00001 = Message matching filter is stored in FIFO buffer 1
00000 = Message matching filter is stored in FIFO buffer 0

bit 23 **FLTEN2:** Filter 2 Enable bit
1 = Filter is enabled
0 = Filter is disabled

bit 22-21 **MSEL2<1:0>:** Filter 2 Mask Select bits
11 = Acceptance Mask 3 selected
10 = Acceptance Mask 2 selected
01 = Acceptance Mask 1 selected
00 = Acceptance Mask 0 selected

bit 20-16 **FSEL2<4:0>:** FIFO Selection bits
11111 = Message matching filter is stored in FIFO buffer 31
11110 = Message matching filter is stored in FIFO buffer 30
•
•
•
00001 = Message matching filter is stored in FIFO buffer 1
00000 = Message matching filter is stored in FIFO buffer 0

bit 15 **FLTEN1:** Filter 1 Enable bit
1 = Filter is enabled
0 = Filter is disabled

Note: The bits in this register can only be modified if the corresponding filter enable (FLTENn) bit is '0'.

 © 2020 Microchip Technology Inc.

REGISTER 30-10: C1FLTCON0: CAN FILTER CONTROL REGISTER 0 (CONTINUED)

bit 14-13 **MSEL1<1:0>:** Filter 1 Mask Select bits
11 = Acceptance Mask 3 selected
10 = Acceptance Mask 2 selected
01 = Acceptance Mask 1 selected
00 = Acceptance Mask 0 selected

bit 12-8 **FSEL1<4:0>:** FIFO Selection bits
11111 = Message matching filter is stored in FIFO buffer 31
11110 = Message matching filter is stored in FIFO buffer 30
•
•
•
00001 = Message matching filter is stored in FIFO buffer 1
00000 = Message matching filter is stored in FIFO buffer 0

bit 7 **FLTEN0:** Filter 0 Enable bit
1 = Filter is enabled
0 = Filter is disabled

bit 6-5 **MSEL0<1:0>:** Filter 0 Mask Select bits
11 = Acceptance Mask 3 selected
10 = Acceptance Mask 2 selected
01 = Acceptance Mask 1 selected
00 = Acceptance Mask 0 selected

bit 4-0 **FSEL0<4:0>:** FIFO Selection bits
11111 = Message matching filter is stored in FIFO buffer 31
11110 = Message matching filter is stored in FIFO buffer 30
•
•
•
00001 = Message matching filter is stored in FIFO buffer 1
00000 = Message matching filter is stored in FIFO buffer 0

Note: The bits in this register can only be modified if the corresponding filter enable (FLTENn) bit is '0'.

REGISTER 30-11: C1FLTCON1: CAN FILTER CONTROL REGISTER 1

Bit Range	Bit 31/23/15/7	Bit 30/22/14/6	Bit 29/21/13/5	Bit 28/20/12/4	Bit 27/19/11/3	Bit 26/18/10/2	Bit 25/17/9/1	Bit 24/16/8/0
31:24	R/W-0	R/W-0	R/W-0	R/W-0	R/W-0	R/W-0	R/W-0	R/W-0
	FLTEN7	MSEL7<1:0>		FSEL7<4:0>				
23:16	R/W-0	R/W-0	R/W-0	R/W-0	R/W-0	R/W-0	R/W-0	R/W-0
	FLTEN6	MSEL6<1:0>		FSEL6<4:0>				
15:8	R/W-0	R/W-0	R/W-0	R/W-0	R/W-0	R/W-0	R/W-0	R/W-0
	FLTEN5	MSEL5<1:0>		FSEL5<4:0>				
7:0	R/W-0	R/W-0	R/W-0	R/W-0	R/W-0	R/W-0	R/W-0	R/W-0
	FLTEN4	MSEL4<1:0>		FSEL4<4:0>				

Legend:			
R = Readable bit	W = Writable bit	U = Unimplemented bit, read as '0'	
-n = Value at POR	'1' = Bit is set	'0' = Bit is cleared	x = Bit is unknown

bit 31 **FLTEN7:** Filter 7 Enable bit
1 = Filter is enabled
0 = Filter is disabled

bit 30-29 **MSEL7<1:0>:** Filter 7 Mask Select bits
11 = Acceptance Mask 3 selected
10 = Acceptance Mask 2 selected
01 = Acceptance Mask 1 selected
00 = Acceptance Mask 0 selected

bit 28-24 **FSEL7<4:0>:** FIFO Selection bits
11111 = Message matching filter is stored in FIFO buffer 31
11110 = Message matching filter is stored in FIFO buffer 30
.
.
.
00001 = Message matching filter is stored in FIFO buffer 1
00000 = Message matching filter is stored in FIFO buffer 0

bit 23 **FLTEN6:** Filter 6 Enable bit
1 = Filter is enabled
0 = Filter is disabled

bit 22-21 **MSEL6<1:0>:** Filter 6 Mask Select bits
11 = Acceptance Mask 3 selected
10 = Acceptance Mask 2 selected
01 = Acceptance Mask 1 selected
00 = Acceptance Mask 0 selected

bit 20-16 **FSEL6<4:0>:** FIFO Selection bits
11111 = Message matching filter is stored in FIFO buffer 31
11110 = Message matching filter is stored in FIFO buffer 30
.
.
.
00001 = Message matching filter is stored in FIFO buffer 1
00000 = Message matching filter is stored in FIFO buffer 0

bit 15 **FLTEN5:** Filter 17 Enable bit
1 = Filter is enabled
0 = Filter is disabled

Note: The bits in this register can only be modified if the corresponding filter enable (FLTENn) bit is '0'.

 © 2020 Microchip Technology Inc.

REGISTER 30-11: C1FLTCON1: CAN FILTER CONTROL REGISTER 1 (CONTINUED)

bit 14-13 **MSEL5<1:0>:** Filter 5 Mask Select bits
11 = Acceptance Mask 3 selected
10 = Acceptance Mask 2 selected
01 = Acceptance Mask 1 selected
00 = Acceptance Mask 0 selected

bit 12-8 **FSEL5<4:0>:** FIFO Selection bits
11111 = Message matching filter is stored in FIFO buffer 31
11110 = Message matching filter is stored in FIFO buffer 30
•
•
•
00001 = Message matching filter is stored in FIFO buffer 1
00000 = Message matching filter is stored in FIFO buffer 0

bit 7 **FLTEN4:** Filter 4 Enable bit
1 = Filter is enabled
0 = Filter is disabled

bit 6-5 **MSEL4<1:0>:** Filter 4 Mask Select bits
11 = Acceptance Mask 3 selected
10 = Acceptance Mask 2 selected
01 = Acceptance Mask 1 selected
00 = Acceptance Mask 0 selected

bit 4-0 **FSEL4<4:0>:** FIFO Selection bits
11111 = Message matching filter is stored in FIFO buffer 31
11110 = Message matching filter is stored in FIFO buffer 30
•
•
•
00001 = Message matching filter is stored in FIFO buffer 1
00000 = Message matching filter is stored in FIFO buffer 0

Note: The bits in this register can only be modified if the corresponding filter enable (FLTENn) bit is '0'.

REGISTER 30-12: C1FLTCON2: CAN FILTER CONTROL REGISTER 2

Bit Range	Bit 31/23/15/7	Bit 30/22/14/6	Bit 29/21/13/5	Bit 28/20/12/4	Bit 27/19/11/3	Bit 26/18/10/2	Bit 25/17/9/1	Bit 24/16/8/0
31:24	R/W-0	R/W-0	R/W-0	R/W-0	R/W-0	R/W-0	R/W-0	R/W-0
	FLTEN11	MSEL11<1:0>		FSEL11<4:0>				
23:16	R/W-0	R/W-0	R/W-0	R/W-0	R/W-0	R/W-0	R/W-0	R/W-0
	FLTEN10	MSEL10<1:0>		FSEL10<4:0>				
15:8	R/W-0	R/W-0	R/W-0	R/W-0	R/W-0	R/W-0	R/W-0	R/W-0
	FLTEN9	MSEL9<1:0>		FSEL9<4:0>				
7:0	R/W-0	R/W-0	R/W-0	R/W-0	R/W-0	R/W-0	R/W-0	R/W-0
	FLTEN8	MSEL8<1:0>		FSEL8<4:0>				

Legend:			
R = Readable bit	W = Writable bit	U = Unimplemented bit, read as '0'	
-n = Value at POR	'1' = Bit is set	'0' = Bit is cleared	x = Bit is unknown

bit 31 **FLTEN11:** Filter 11 Enable bit
1 = Filter is enabled
0 = Filter is disabled

bit 30-29 **MSEL11<1:0>:** Filter 11 Mask Select bits
11 = Acceptance Mask 3 selected
10 = Acceptance Mask 2 selected
01 = Acceptance Mask 1 selected
00 = Acceptance Mask 0 selected

bit 28-24 **FSEL11<4:0>:** FIFO Selection bits
11111 = Message matching filter is stored in FIFO buffer 31
11110 = Message matching filter is stored in FIFO buffer 30
•
•
•
00001 = Message matching filter is stored in FIFO buffer 1
00000 = Message matching filter is stored in FIFO buffer 0

bit 23 **FLTEN10:** Filter 10 Enable bit
1 = Filter is enabled
0 = Filter is disabled

bit 22-21 **MSEL10<1:0>:** Filter 10 Mask Select bits
11 = Acceptance Mask 3 selected
10 = Acceptance Mask 2 selected
01 = Acceptance Mask 1 selected
00 = Acceptance Mask 0 selected

bit 20-16 **FSEL10<4:0>:** FIFO Selection bits
11111 = Message matching filter is stored in FIFO buffer 31
11110 = Message matching filter is stored in FIFO buffer 30
•
•
•
00001 = Message matching filter is stored in FIFO buffer 1
00000 = Message matching filter is stored in FIFO buffer 0

bit 15 **FLTEN9:** Filter 9 Enable bit
1 = Filter is enabled
0 = Filter is disabled

Note: The bits in this register can only be modified if the corresponding filter enable (FLTENn) bit is '0'.

 © 2020 Microchip Technology Inc.

REGISTER 30-12: C1FLTCON2: CAN FILTER CONTROL REGISTER 2 (CONTINUED)

bit 14-13 **MSEL9<1:0>:** Filter 9 Mask Select bits
11 = Acceptance Mask 3 selected
10 = Acceptance Mask 2 selected
01 = Acceptance Mask 1 selected
00 = Acceptance Mask 0 selected

bit 12-8 **FSEL9<4:0>:** FIFO Selection bits
11111 = Message matching filter is stored in FIFO buffer 31
11110 = Message matching filter is stored in FIFO buffer 30
•
•
•
00001 = Message matching filter is stored in FIFO buffer 1
00000 = Message matching filter is stored in FIFO buffer 0

bit 7 **FLTEN8:** Filter 8 Enable bit
1 = Filter is enabled
0 = Filter is disabled

bit 6-5 **MSEL8<1:0>:** Filter 8 Mask Select bits
11 = Acceptance Mask 3 selected
10 = Acceptance Mask 2 selected
01 = Acceptance Mask 1 selected
00 = Acceptance Mask 0 selected

bit 4-0 **FSEL8<4:0>:** FIFO Selection bits
11111 = Message matching filter is stored in FIFO buffer 31
11110 = Message matching filter is stored in FIFO buffer 30
•
•
•
00001 = Message matching filter is stored in FIFO buffer 1
00000 = Message matching filter is stored in FIFO buffer 0

Note: The bits in this register can only be modified if the corresponding filter enable (FLTENn) bit is '0'.

REGISTER 30-13: C1FLTCON3: CAN FILTER CONTROL REGISTER 3

Bit Range	Bit 31/23/15/7	Bit 30/22/14/6	Bit 29/21/13/5	Bit 28/20/12/4	Bit 27/19/11/3	Bit 26/18/10/2	Bit 25/17/9/1	Bit 24/16/8/0
31:24	R/W-0	R/W-0	R/W-0	R/W-0	R/W-0	R/W-0	R/W-0	R/W-0
	FLTEN15	MSEL15<1:0>		FSEL15<4:0>				
23:16	R/W-0	R/W-0	R/W-0	R/W-0	R/W-0	R/W-0	R/W-0	R/W-0
	FLTEN14	MSEL14<1:0>		FSEL14<4:0>				
15:8	R/W-0	R/W-0	R/W-0	R/W-0	R/W-0	R/W-0	R/W-0	R/W-0
	FLTEN13	MSEL13<1:0>		FSEL13<4:0>				
7:0	R/W-0	R/W-0	R/W-0	R/W-0	R/W-0	R/W-0	R/W-0	R/W-0
	FLTEN12	MSEL12<1:0>		FSEL12<4:0>				

Legend:			
R = Readable bit	W = Writable bit	U = Unimplemented bit, read as '0'	
-n = Value at POR	'1' = Bit is set	'0' = Bit is cleared	x = Bit is unknown

bit 31 **FLTEN15:** Filter 15 Enable bit
1 = Filter is enabled
0 = Filter is disabled

bit 30-29 **MSEL15<1:0>:** Filter 15 Mask Select bits
11 = Acceptance Mask 3 selected
10 = Acceptance Mask 2 selected
01 = Acceptance Mask 1 selected
00 = Acceptance Mask 0 selected

bit 28-24 **FSEL15<4:0>:** FIFO Selection bits
11111 = Message matching filter is stored in FIFO buffer 31
11110 = Message matching filter is stored in FIFO buffer 30
•
•
•
00001 = Message matching filter is stored in FIFO buffer 1
00000 = Message matching filter is stored in FIFO buffer 0

bit 23 **FLTEN14:** Filter 14 Enable bit
1 = Filter is enabled
0 = Filter is disabled

bit 22-21 **MSEL14<1:0>:** Filter 14 Mask Select bits
11 = Acceptance Mask 3 selected
10 = Acceptance Mask 2 selected
01 = Acceptance Mask 1 selected
00 = Acceptance Mask 0 selected

bit 20-16 **FSEL14<4:0>:** FIFO Selection bits
11111 = Message matching filter is stored in FIFO buffer 31
11110 = Message matching filter is stored in FIFO buffer 30
•
•
•
00001 = Message matching filter is stored in FIFO buffer 1
00000 = Message matching filter is stored in FIFO buffer 0

bit 15 **FLTEN13:** Filter 13 Enable bit
1 = Filter is enabled
0 = Filter is disabled

Note: The bits in this register can only be modified if the corresponding filter enable (FLTENn) bit is '0'.

 © 2020 Microchip Technology Inc.

REGISTER 30-13: C1FLTCON3: CAN FILTER CONTROL REGISTER 3 (CONTINUED)

bit 14-13 **MSEL13<1:0>:** Filter 13 Mask Select bits
11 = Acceptance Mask 3 selected
10 = Acceptance Mask 2 selected
01 = Acceptance Mask 1 selected
00 = Acceptance Mask 0 selected

bit 12-8 **FSEL13<4:0>:** FIFO Selection bits
11111 = Message matching filter is stored in FIFO buffer 31
11110 = Message matching filter is stored in FIFO buffer 30
•
•
•
00001 = Message matching filter is stored in FIFO buffer 1
00000 = Message matching filter is stored in FIFO buffer 0

bit 7 **FLTEN12:** Filter 12 Enable bit
1 = Filter is enabled
0 = Filter is disabled

bit 6-5 **MSEL12<1:0>:** Filter 12 Mask Select bits
11 = Acceptance Mask 3 selected
10 = Acceptance Mask 2 selected
01 = Acceptance Mask 1 selected
00 = Acceptance Mask 0 selected

bit 4-0 **FSEL12<4:0>:** FIFO Selection bits
11111 = Message matching filter is stored in FIFO buffer 31
11110 = Message matching filter is stored in FIFO buffer 30
•
•
•
00001 = Message matching filter is stored in FIFO buffer 1
00000 = Message matching filter is stored in FIFO buffer 0

Note: The bits in this register can only be modified if the corresponding filter enable (FLTENn) bit is '0'.

REGISTER 30-14: C1RXFn: CAN ACCEPTANCE FILTER 'n' REGISTER 7 ('n' = 0-15)

Bit Range	Bit 31/23/15/7	Bit 30/22/14/6	Bit 29/21/13/5	Bit 28/20/12/4	Bit 27/19/11/3	Bit 26/18/10/2	Bit 25/17/9/1	Bit 24/16/8/0
31:24	R/W-x	R/W-x	R/W-x	R/W-x	R/W-x	R/W-x	R/W-x	R/W-x
	SID<10:3>							
23:16	R/W-x	R/W-x	R/W-x	U-0	R/W-0	U-0	R/W-x	R/W-x
	SID<2:0>			—	EXID	—	EID<17:16>	
15:8	R/W-x	R/W-x	R/W-x	R/W-x	R/W-x	R/W-x	R/W-x	R/W-x
	EID<15:8>							
7:0	R/W-x	R/W-x	R/W-x	R/W-x	R/W-x	R/W-x	R/W-x	R/W-x
	EID<7:0>							

Legend:			
R = Readable bit	W = Writable bit	U = Unimplemented bit, read as '0'	
-n = Value at POR	'1' = Bit is set	'0' = Bit is cleared	x = Bit is unknown

bit 31-21 **SID<10:0>:** Standard Identifier bits
1 = Message address bit SIDx must be '1' to match filter
0 = Message address bit SIDx must be '0' to match filter

bit 20 **Unimplemented:** Read as '0'

bit 19 **EXID:** Extended Identifier Enable bits
1 = Match only messages with extended identifier addresses
0 = Match only messages with standard identifier addresses

bit 18 **Unimplemented:** Read as '0'

bit 17-0 **EID<17:0>:** Extended Identifier bits
1 = Message address bit EIDx must be '1' to match filter
0 = Message address bit EIDx must be '0' to match filter

Note: This register can only be modified when the filter is disabled (FLTENn = 0).

 © 2020 Microchip Technology Inc.

REGISTER 30-15: C1FIFOBA: CAN MESSAGE BUFFER BASE ADDRESS REGISTER

Bit Range	Bit 31/23/15/7	Bit 30/22/14/6	Bit 29/21/13/5	Bit 28/20/12/4	Bit 27/19/11/3	Bit 26/18/10/2	Bit 25/17/9/1	Bit 24/16/8/0
31:24	R/W-0	R/W-0	R/W-0	R/W-0	R/W-0	R/W-0	R/W-0	R/W-0
	C1FIFOBA<31:24>							
23:16	R/W-0	R/W-0	R/W-0	R/W-0	R/W-0	R/W-0	R/W-0	R/W-0
	C1FIFOBA<23:16>							
15:8	R/W-0	R/W-0	R/W-0	R/W-0	R/W-0	R/W-0	R/W-0	R/W-0
	C1FIFOBA<15:8>							
7:0	R/W-0	R/W-0	R/W-0	R/W-0	R/W-0	R/W-0	R-0(1)	R-0(1)
	C1FIFOBA<7:0>							

Legend:			
R = Readable bit	W = Writable bit	U = Unimplemented bit, read as '0'	
-n = Value at POR	'1' = Bit is set	'0' = Bit is cleared	x = Bit is unknown

bit 31-2 **C1FIFOBA<29:0>:** CAN FIFO Base Address bits
These bits define the base address of all message buffers. Individual message buffers are located based on the size of the previous message buffers. This address is a physical address. Note that bits <1:0> are read-only and read '0', forcing the messages to be 32-bit word-aligned in device RAM.

bit 1-0 **Unimplemented:** Read as '0'

Note 1: This bit is unimplemented and will always read '0', which forces word-alignment of messages.

2: This register can only be modified when the CAN module is in Configuration mode (OPMOD<2:0> (C1CON<23:21>) = 100).

REGISTER 30-16: C1FIFOCONn: CAN FIFO CONTROL REGISTER 'n' ('n' = 0-15)

Bit Range	Bit 31/23/15/7	Bit 30/22/14/6	Bit 29/21/13/5	Bit 28/20/12/4	Bit 27/19/11/3	Bit 26/18/10/2	Bit 25/17/9/1	Bit 24/16/8/0
31:24	U-0	U-0	U-0	U-0	U-0	U-0	U-0	U-0
	—	—	—	—	—	—	—	—
23:16	U-0	U-0	U-0	R/W-0	R/W-0	R/W-0	R/W-0	R/W-0
	—	—	—	FSIZE<4:0>(1)				
15:8	U-0	S/HC-0	S/HC-0	R/W-0	U-0	U-0	U-0	U-0
	—	FRESET	UINC	DONLY(1)	—	—	—	—
7:0	R/W-0	R-0	R-0	R-0	R/W-0	R/W-0	R/W-0	R/W-0
	TXEN	TXABAT(2)	TXLARB(3)	TXERR(3)	TXREQ	RTREN	TXPR<1:0>	

Legend:			
R = Readable bit	W = Writable bit	U = Unimplemented bit, read as '0'	
-n = Value at POR	'1' = Bit is set	'0' = Bit is cleared	x = Bit is unknown

bit 31-21 **Unimplemented:** Read as '0'

bit 20-16 **FSIZE<4:0>:** FIFO Size bits(1)

11111 = FIFO is 32 messages deep
•
•
•
00010 = FIFO is 3 messages deep
00001 = FIFO is 2 messages deep
00000 = FIFO is 1 message deep

bit 15 **Unimplemented:** Read as '0'

bit 14 **FRESET:** FIFO Reset bits

1 = FIFO will be reset when bit is set, cleared by hardware when FIFO is reset. After setting, the user application should poll whether this bit is clear before taking any action
0 = No effect

bit 13 **UINC:** Increment Head/Tail bit

TXEN = 1: (FIFO configured as a Transmit FIFO)
When this bit is set, the FIFO head will increment by a single message
TXEN = 0: (FIFO configured as a Receive FIFO)
When this bit is set, the FIFO tail will increment by a single message

bit 12 **DONLY:** Store Message Data Only bit(1)

TXEN = 1: (FIFO configured as a Transmit FIFO)
This bit is not used and has no effect.
TXEN = 0: (FIFO configured as a Receive FIFO)
1 = Only data bytes will be stored in the FIFO
0 = Full message is stored, including identifier

bit 11-8 **Unimplemented:** Read as '0'

bit 7 **TXEN:** TX/RX Buffer Selection bit

1 = FIFO is a Transmit FIFO
0 = FIFO is a Receive FIFO

Note 1: These bits can only be modified when the CAN module is in Configuration mode (OPMOD<2:0> bits (C1CON<23:21>) = 100).

2: This bit is updated when a message completes (or aborts) or when the FIFO is reset.

3: This bit is reset on any read of this register or when the FIFO is reset.

 © 2020 Microchip Technology Inc.

REGISTER 30-16: C1FIFOCONn: CAN FIFO CONTROL REGISTER 'n' ('n' = 0-15) (CONTINUED)

bit 6 **TXABAT:** Message Aborted bit(2)
1 = Message was aborted
0 = Message completed successfully

bit 5 **TXLARB:** Message Lost Arbitration bit(3)
1 = Message lost arbitration while being sent
0 = Message did not lose arbitration while being sent

bit 4 **TXERR:** Error Detected During Transmission bit(3)
1 = A bus error occurred while the message was being sent
0 = A bus error did not occur while the message was being sent

bit 3 **TXREQ:** Message Send Request
TXEN = 1: (FIFO configured as a Transmit FIFO)
Setting this bit to '1' requests sending a message.
The bit will automatically clear when all the messages queued in the FIFO are successfully sent.
Clearing the bit to '0' while set ('1') will request a message abort.
TXEN = 0: (FIFO configured as a Receive FIFO)
This bit has no effect.

bit 2 **RTREN:** Auto RTR Enable bit
1 = When a remote transmit is received, TXREQ will be set
0 = When a remote transmit is received, TXREQ will be unaffected

bit 1-0 **TXPR<1:0>:** Message Transmit Priority bits
11 = Highest Message Priority
10 = High Intermediate Message Priority
01 = Low Intermediate Message Priority
00 = Lowest Message Priority

Note 1: These bits can only be modified when the CAN module is in Configuration mode (OPMOD<2:0> bits (C1CON<23:21>) = 100).
2: This bit is updated when a message completes (or aborts) or when the FIFO is reset.
3: This bit is reset on any read of this register or when the FIFO is reset.

REGISTER 30-17: C1FIFOINTn: CAN FIFO INTERRUPT REGISTER 'n' ('n' = 0-15)

Bit Range	Bit 31/23/15/7	Bit 30/22/14/6	Bit 29/21/13/5	Bit 28/20/12/4	Bit 27/19/11/3	Bit 26/18/10/2	Bit 25/17/9/1	Bit 24/16/8/0
31:24	U-0	U-0	U-0	U-0	U-0	R/W-0	R/W-0	R/W-0
	—	—	—	—	—	TXNFULLIE	TXHALFIE	TXEMPTYIE
23:16	U-0	U-0	U-0	U-0	R/W-0	R/W-0	R/W-0	R/W-0
	—	—	—	—	RXOVFLIE	RXFULLIE	RXHALFIE	RXNEMPTYIE
15:8	U-0	U-0	U-0	U-0	U-0	R-0	R-0	R-0
	—	—	—	—	—	TXNFULLIF(1)	TXHALFIF	TXEMPTYIF(1)
7:0	U-0	U-0	U-0	U-0	R/W-0	R-0	R-0	R-0
	—	—	—	—	RXOVFLIF	RXFULLIF(1)	RXHALFIF(1)	RXNEMPTYIF(1)

Legend:			
R = Readable bit	W = Writable bit	U = Unimplemented bit, read as '0'	
-n = Value at POR	'1' = Bit is set	'0' = Bit is cleared	x = Bit is unknown

bit 31-27 **Unimplemented:** Read as '0'

bit 26 **TXNFULLIE:** Transmit FIFO Not Full Interrupt Enable bit
1 = Interrupt enabled for FIFO not full
0 = Interrupt disabled for FIFO not full

bit 25 **TXHALFIE:** Transmit FIFO Half Full Interrupt Enable bit
1 = Interrupt enabled for FIFO half full
0 = Interrupt disabled for FIFO half full

bit 24 **TXEMPTYIE:** Transmit FIFO Empty Interrupt Enable bit
1 = Interrupt enabled for FIFO empty
0 = Interrupt disabled for FIFO empty

bit 23-20 **Unimplemented:** Read as '0'

bit 19 **RXOVFLIE:** Overflow Interrupt Enable bit
1 = Interrupt enabled for overflow event
0 = Interrupt disabled for overflow event

bit 18 **RXFULLIE:** Full Interrupt Enable bit
1 = Interrupt enabled for FIFO full
0 = Interrupt disabled for FIFO full

bit 17 **RXHALFIE:** FIFO Half Full Interrupt Enable bit
1 = Interrupt enabled for FIFO half full
0 = Interrupt disabled for FIFO half full

bit 16 **RXNEMPTYIE:** Empty Interrupt Enable bit
1 = Interrupt enabled for FIFO not empty
0 = Interrupt disabled for FIFO not empty

bit 15-11 **Unimplemented:** Read as '0'

bit 10 **TXNFULLIF:** Transmit FIFO Not Full Interrupt Flag bit(1)
TXEN = 1: (FIFO configured as a Transmit Buffer)
1 = FIFO is not full
0 = FIFO is full

TXEN = 0: (FIFO configured as a Receive Buffer)
Unused, reads '0'

Note 1: This bit is read-only and reflects the status of the FIFO.

 © 2020 Microchip Technology Inc.

REGISTER 30-17: C1FIFOINTn: CAN FIFO INTERRUPT REGISTER 'n' ('n' = 0-15) (CONTINUED)

bit 9 **TXHALFIF:** FIFO Transmit FIFO Half Empty Interrupt Flag bit(1)
TXEN = 1: (FIFO configured as a Transmit Buffer)
1 = FIFO is ≤ half full
0 = FIFO is > half full
TXEN = 0: (FIFO configured as a Receive Buffer)
Unused, reads '0'

bit 8 **TXEMPTYIF:** Transmit FIFO Empty Interrupt Flag bit(1)
TXEN = 1: (FIFO configured as a Transmit Buffer)
1 = FIFO is empty
0 = FIFO is not empty, at least 1 message queued to be transmitted
TXEN = 0: (FIFO configured as a Receive Buffer)
Unused, reads '0'

bit 7-4 **Unimplemented:** Read as '0'

bit 3 **RXOVFLIF:** Receive FIFO Overflow Interrupt Flag bit
TXEN = 1: (FIFO configured as a Transmit Buffer)
Unused, reads '0'
TXEN = 0: (FIFO configured as a Receive Buffer)
1 = Overflow event has occurred
0 = No overflow event occurred

bit 2 **RXFULLIF:** Receive FIFO Full Interrupt Flag bit(1)
TXEN = 1: (FIFO configured as a Transmit Buffer)
Unused, reads '0'
TXEN = 0: (FIFO configured as a Receive Buffer)
1 = FIFO is full
0 = FIFO is not full

bit 1 **RXHALFIF:** Receive FIFO Half Full Interrupt Flag bit(1)
TXEN = 1: (FIFO configured as a Transmit Buffer)
Unused, reads '0'
TXEN = 0: (FIFO configured as a Receive Buffer)
1 = FIFO is ≥ half full
0 = FIFO is < half full

bit 0 **RXNEMPTYIF:** Receive Buffer Not Empty Interrupt Flag bit(1)
TXEN = 1: (FIFO configured as a Transmit Buffer)
Unused, reads '0'
TXEN = 0: (FIFO configured as a Receive Buffer)
1 = FIFO is not empty, has at least 1 message
0 = FIFO is empty

Note 1: This bit is read-only and reflects the status of the FIFO.

REGISTER 30-18: C1FIFOUAn: CAN FIFO USER ADDRESS REGISTER 'n' ('n' = 0-15)

Bit Range	Bit 31/23/15/7	Bit 30/22/14/6	Bit 29/21/13/5	Bit 28/20/12/4	Bit 27/19/11/3	Bit 26/18/10/2	Bit 25/17/9/1	Bit 24/16/8/0
31:24	R-x	R-x	R-x	R-x	R-x	R-x	R-x	R-x
	C1FIFOUAn<31:24>							
23:16	R-x	R-x	R-x	R-x	R-x	R-x	R-x	R-x
	C1FIFOUAn<23:16>							
15:8	R-x	R-x	R-x	R-x	R-x	R-x	R-x	R-x
	C1FIFOUAn<15:8>							
7:0	R-x	R-x	R-x	R-x	R-x	R-x	R-0(1)	R-0(1)
	C1FIFOUAn<7:0>							

Legend:			
R = Readable bit	W = Writable bit	U = Unimplemented bit, read as '0'	
-n = Value at POR	'1' = Bit is set	'0' = Bit is cleared	x = Bit is unknown

bit 31-2 **C1FIFOUAn<29:0>:** CAN FIFO User Address bits

TXEN = 1: (FIFO configured as a transmit buffer)

A read of this register will return the address where the next message is to be written (FIFO head).

TXEN = 0: (FIFO configured as a receive buffer)

A read of this register will return the address where the next message is to be read (FIFO tail).

bit 1-0 **Unimplemented:** Read as '0'

Note 1: This bit will always read '0', which forces byte-alignment of messages.

2: This register is not guaranteed to read correctly in Configuration mode, and should only be accessed when the module is not in Configuration mode.

REGISTER 30-19: C1FIFOCIn: CAN MODULE MESSAGE INDEX REGISTER 'n' ('n' = 0-15)

Bit Range	Bit 31/23/15/7	Bit 30/22/14/6	Bit 29/21/13/5	Bit 28/20/12/4	Bit 27/19/11/3	Bit 26/18/10/2	Bit 25/17/9/1	Bit 24/16/8/0
31:24	U-0	U-0	U-0	U-0	U-0	U-0	U-0	U-0
	—	—	—	—	—	—	—	—
23:16	U-0	U-0	U-0	U-0	U-0	U-0	U-0	U-0
	—	—	—	—	—	—	—	—
15:8	U-0	U-0	U-0	U-0	U-0	U-0	U-0	U-0
	—	—	—	—	—	—	—	—
7:0	U-0	U-0	U-0	R-0	R-0	R-0	R-0	R-0
	—	—	—	C1FIFOCIn<4:0>				

Legend:			
R = Readable bit	W = Writable bit	U = Unimplemented bit, read as '0'	
-n = Value at POR	'1' = Bit is set	'0' = Bit is cleared	x = Bit is unknown

bit 31-5 **Unimplemented:** Read as '0'

bit 4-0 **C1FIFOCIn<4:0>:** CAN Side FIFO Message Index bits

TXEN = 1: (FIFO configured as a transmit buffer)
A read of this register will return an index to the message that the FIFO will next attempt to transmit.

TXEN = 0: (FIFO configured as a receive buffer)
A read of this register will return an index to the message that the FIFO will use to save the next message.

 © 2020 Microchip Technology Inc.

31.0 CONTROLLER AREA NETWORK-FLEXIBLE DATA-RATE (CAN-FD) MODULE

Note: This data sheet summarizes the features of the PIC32MZ W1 family of devices. It is not intended to be a comprehensive reference source. To complement the information in this data sheet, refer to **Section 56. Controller Area Network with Flexible Data-rate (CAN FD)** (DS60001549) in the *"PIC32 Family Reference Manual"*, which is available from the Microchip web site (www.microchip.com/PIC32).

The PIC32MZ W1 device supports one CAN-FD module. The CAN-FD module supports the following key features:

- Compliance:
  - Full CAN 2.0B (ISO11898-1:2015)
  - CAN-FD 1.0
  - Supports up to 64 data bytes
  - Arbitration Bit Rate up to 1 Mbps
  - FD Bit Rate up to 8 Mbps
- Message objects:
  - Maximum of 15 FIFOs, configurable as transmit or receive FIFOs
  - One Transmit Queue (TXQ)
  - Transmit event FIFO with time stamp
- Message transmission:
  - Programmable automatic retransmission attempts: unlimited, 3 attempts, or disabled
  - Message transmission prioritization:
    - Based on priority bit field
    - Message with lowest ID gets transmitted first using a TXQ
- Message reception:
  - Maximum of 16 flexible filter and Mask Objects
  - FIFO depth up to 32
  - Message depth up to 32 bytes
  - Each object can be configured to filter either:
    - Standard ID + first 2 data bytes
    - Extended ID
  - All filter objects can be used as filter plus mask
  - 32-bit time stamp
- Special features:
  - Selective wake-up, and transceiver standby control
  - Minimum of 4 time quanta per bit time
  - Message objects and filters are located in SRAM; size: minimum 2 KB
  - Low-Power Operating mode
  - Bus health diagnostics and error counters
  - Disable mode
  - Loopback mode (internal and external)
  - Listen Only mode
  - Configuration mode
  - Restricted Operation mode

FIGURE 31-1: CAN-FD BLOCK DIAGRAM

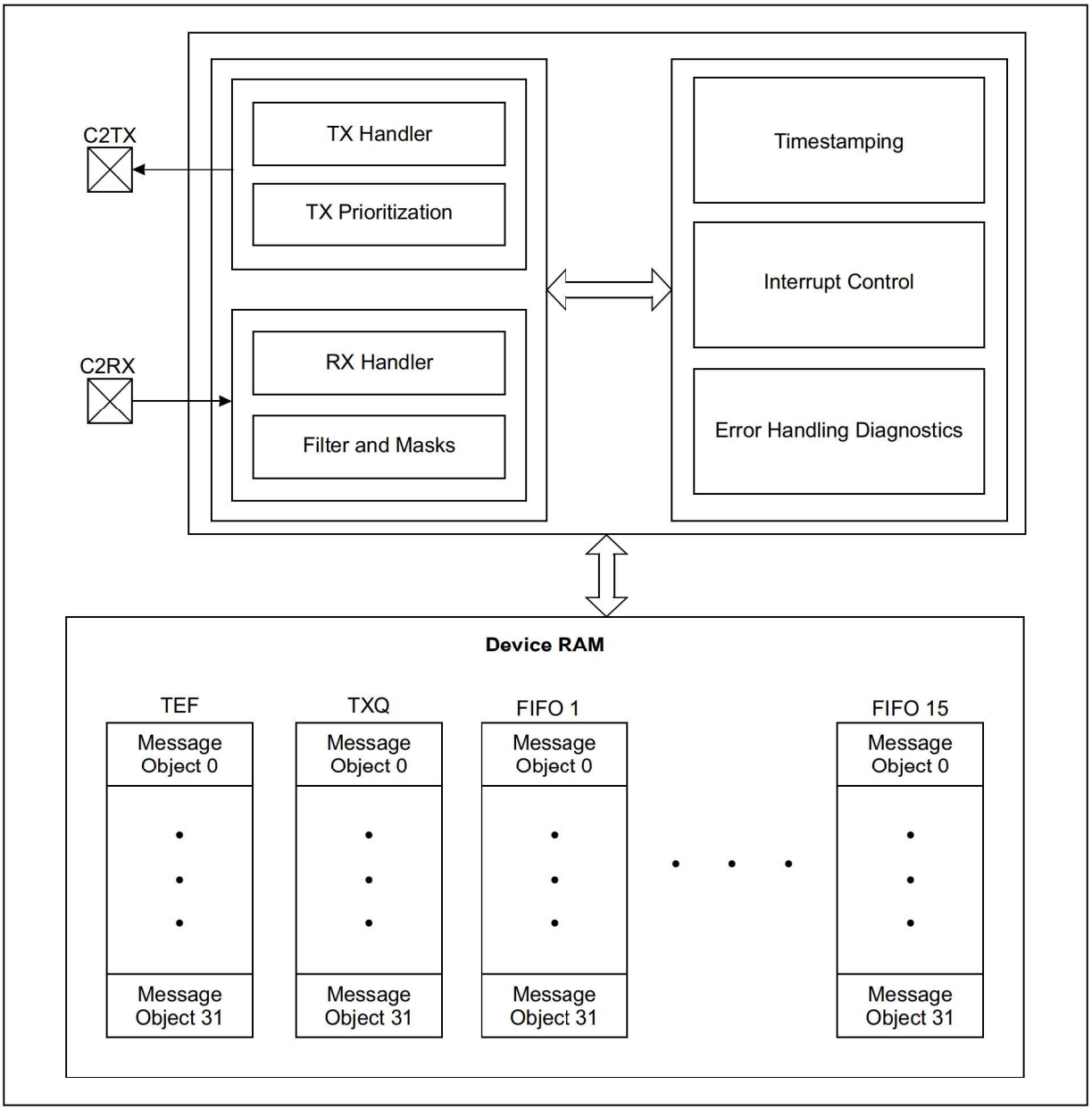

 © 2020 Microchip Technology Inc.

31.1 CAN-FD Control Registers

TABLE 31-1: CAN-FD REGISTER SUMMARY FOR PIC32MZ W1 DEVICES

Virtual Address (BF82_#)	Register Name(1)	Bit Range	Bits																All Resets
			31/15	30/14	29/13	28/12	27/11	26/10	25/9	24/8	23/7	22/6	21/5	20/4	19/3	18/2	17/1	16/0	
3000	CFD2CON	31:16	TXBWS<3:0>				ABAT	REQOP<2:0>			OPMOD<2:0>			TXQEN	STEF	SERR2-LOM	ESIGM	RTXAT	0000
		15:0	ON	—	SIDL	BRSDIS	CAN-BUSY	WFT<1:0>		WAK-FIL	CLKSEL0	PXEDIS	ISOCRCEN	DNCNT<4:0>					0000
3004	CFD2NBTCFG	31:16	BRP<7:0>								TSEG1<7:0>								0000
		15:0	—	TSEG2<6:0>							—	SJW<6:0>							0000
3008	CFD2DBTCFG	31:16	BRP<7:0>								—	—	—	TSEG1<4:0>					0000
		15:0	—	—	—	—	TSEG2<3:0>				—	—	—	—	SJW<3:0>				0000
300C	CFD2TDC	31:16	—	—	—	—	—	—	EDG-FLTEN	SID11 EN	—	—	—	—	—	—	TDCMOD<1:0>		0000
		15:0	—	TDCO<6:0>							—	—	TDCV<5:0>						0000
3010	CFD2TBC	31:16	TBC<31:16>																0000
		15:0	TBC<15:0>																0000
3014	CFD2TSCON	31:16	—	—	—	—	—	—	—	—	—	—	—	—	—	TSRES	TSEOF	TBCEN	0000
		15:0	—	—	—	—	—	—	TBCPRE<9:0>										0000
3018	CFD2VEC	31:16	—	RXCODE<6:0>							—	TXCODE<6:0>							0000
		15:0	—	—	—	FILHIT<4:0>					—	ICODE<6:0>							0000
301C	CFD2INT	31:16	IVMIE	WAKIE	CERRIE	SERRIE	RXOVIE	TXATIE	SPI-CRCIE	ECCIE	—	—	—	TEFIE	MODIE	TBCIE	RXIE	TXIE	0000
		15:0	IVMIF	WAKIF	CERRIF	SERRIF	RXOVIF	TXATIF	SPI-CRCIF	ECCIF	—	—	—	TEFIF	MODIF	TBCIF	RXIF	TXIF	0000
3020	CFD2RXIF	31:16	RFIF<30:15>																0000
		15:0	RFIF<14:0>															—	0000
3024	CFD2TXIF	31:16	TFIF<31:16>																0000
		15:0	TFIF<15:0>																0000
3028	CFD2RXOVIF	31:16	RFOVIF<30:15>																0000
		15:0	RFOVIF<14:0>															—	0000

Note 1: The lower order byte of the 32-bit register resides at the low-order address.

2: All registers in CAN-FD does not have corresponding CLR, SET and INV registers at their virtual addresses. SET, INV, CLR needs to be taken care by programming.

© 2020 Microchip Technology Inc.

TABLE 31-1: CAN-FD REGISTER SUMMARY FOR PIC32MZ W1 DEVICES (CONTINUED)

Virtual Address (BF82_ #)	Register Name(1)	Bit Range	Bits																All Resets
			31/15	30/14	29/13	28/12	27/11	26/10	25/9	24/8	23/7	22/6	21/5	20/4	19/3	18/2	17/1	16/0	
302C	CFD2TXATIF	31:16	TFATIF<31:16>																0000
		15:0	TFATIF<15:0>																0000
3030	CFD2TXREQ	31:16	TXREQ<31:16>																0000
		15:0	TXREQ<15:0>																0000
3034	CFD2TREC	31:16	—	—	—	—	—	—	—	—	—	—	TXBO	TXBP	RXBP	TXWARN	RXWARN	EWARN	0000
		15:0	TERRCNT<7:0>								RERRCNT<7:0>								0000
3038	CFD2BDIAG0	31:16	DTERRCNT<7:0>								DRERRCNT<7:0>								0000
		15:0	NTERRCNT<7:0>								NRERRCNT<7:0>								0000
303C	CFD2BDIAG1	31:16	DLCMM	ESI	DCRCERR	DSTUFERR	DFORMERR	—	DBIT1ERR	DBIT0ERR	—	—	NCRCERR	NSTUFERR	NFORMERR	NACKERR	NBIT1ERR	NBIT0ERR	0000
		15:0	EFMSGCNT<15:0>																0000
3040	CFD2TEFCON	31:16	—	—	—	FSIZE<5:0>					—	—	—	—	—	—	—	—	0000
		15:0	—	—	—	—	—	FRESET	—	UINC	—	—	TEFTSEN	—	TEFOVIE	TEFFIE	TEFHIE	TEFNEIE	0000
3044	CFD2TEFSTA	31:16	—	—	—	—	—	—	—	—	—	—	—	—	—	—	—	—	0000
		15:0	—	—	—	—	—	—	—	—	—	—	—	—	TEFOVIF	TEFFIF	TEFHIF	TEFNEIF	0000
3048	CFD2TEFUA	31:16	TEFUA<31:16>																0000
		15:0	TEFUA<15:0>																0000
304C	CFD2FIFOBA	31:16	FIFOBA<31:16>																0000
		15:0	FIFOBA<15:0>																0000
3050	CFD2TXQCON	31:16	PLSIZE<2:0>			FSIZE<4:0>					—	TXAT<1:0>			TXPRI<4:0>				0000
		15:0	—	—	—	—	—	FRESET	TXREQ	UINC	TXEN	—	—	TXATIE	—	TXQEIE	—	TXQNIE	0000
3054	CFD2TXQSTA	31:16	—	—	—	—	—	—	—	—	—	—	—	—	—	—	—	—	0000
		15:0	—	—	—	TXQCI<4:0>					TXABT	TXLARB	TXERR	TXATIF	—	TXQEIF	—	TXQNIF	0000

Note 1: The lower order byte of the 32-bit register resides at the low-order address.

2: All registers in CAN-FD does not have corresponding CLR, SET and INV registers at their virtual addresses. SET, INV, CLR needs to be taken care by programming.

© 2020 Microchip Technology Inc.

TABLE 31-1: CAN-FD REGISTER SUMMARY FOR PIC32MZ W1 DEVICES (CONTINUED)

Virtual Address (BF82_#)	Register Name(1)	Bit Range	Bits																All Resets
			31/15	30/14	29/13	28/12	27/11	26/10	25/9	24/8	23/7	22/6	21/5	20/4	19/3	18/2	17/1	16/0	
3058	CFD2TXQUA	31:16	TXQUA<31:16>																0000
		15:0	TXQUA<15:0>																0000
305C	CFD2FIFO-CON1	31:16	PLSIZE<2:0>			FSIZE<4:0>					—	TXAT<1:0>		TXPRI<4:0>					0000
		15:0	—	—	—	—	—	FRESET	TXREQ	UINC	TXEN	RTREN	RXTSEN	TXATIE	RXOVIE	TFERF-FIE	TFHRFH IE	TFNRF-NIE	0000
3060	CFD2FIFOS-TA1	31:16	—	—	—	—	—	—	—	—	—	—	—	—	—	—	—	—	0000
		15:0	—	—	—	FIFOCI<4:0>					TXABT	TXLARB	TXERR	TXATIF	RXOVIF	TFERFFI F	TFHRF-HIF	TFN-RFNIF	0000
3064	CFD2FIFOUA1	31:16	FIFOUA<31:16>																0000
		15:0	FIFOUA<15:0>																0000
3068	CFD2FIFO-CON2	31:16	PLSIZE<2:0>			FSIZE<4:0>					—	TXAT<1:0>		TXPRI<4:0>					0000
		15:0	—	—	—	—	—	FRESET	TXREQ	UINC	TXEN	RTREN	RXTSEN	TXATIE	RXOVIE	TFERF-FIE	TFHRFH IE	TFNRF-NIE	0000
306C	CFD2FIFOS-TA2	31:16	—	—	—	—	—	—	—	—	—	—	—	—	—	—	—	—	0000
		15:0	—	—	—	FIFOCI<4:0>					TXABT	TXLARB	TXERR	TXATIF	RXOVIF	TFERFFI F	TFHRF-HIF	TFN-RFNIF	0000
3070	CFD2FIFOUA2	31:16	FIFOUA<31:16>																0000
		15:0	FIFOUA<15:0>																0000
3074	CFD2FIFO-CON3	31:16	PLSIZE<2:0>			FSIZE<4:0>					—	TXAT<1:0>		TXPRI<4:0>					0000
		15:0	—	—	—	—	—	FRESET	TXREQ	UINC	TXEN	RTREN	RXTSEN	TXATIE	RXOVIE	TFERF-FIE	TFHRFH IE	TFNRF-NIE	0000
3078	CFD2FIFOS-TA3	31:16	—	—	—	—	—	—	—	—	—	—	—	—	—	—	—	—	0000
		15:0	—	—	—	FIFOCI<4:0>					TXABT	TXLARB	TXERR	TXATIF	RXOVIF	TFERFFI F	TFHRF-HIF	TFN-RFNIF	0000
307C	CFD2FIFOUA3	31:16	FIFOUA<31:16>																0000
		15:0	FIFOUA<15:0>																0000
3080	CFD2FIFO-CON4	31:16	PLSIZE<2:0>			FSIZE<4:0>					—	TXAT<1:0>		TXPRI<4:0>					0000
		15:0	—	—	—	—	—	FRESET	TXREQ	UINC	TXEN	RTREN	RXTSEN	TXATIE	RXOVIE	TFERF-FIE	TFHRFH IE	TFNRF-NIE	0000

Note 1: The lower order byte of the 32-bit register resides at the low-order address.

2: All registers in CAN-FD does not have corresponding CLR, SET and INV registers at their virtual addresses. SET, INV, CLR needs to be taken care by programming.

© 2020 Microchip Technology Inc.

TABLE 31-1: CAN-FD REGISTER SUMMARY FOR PIC32MZ W1 DEVICES (CONTINUED)

Virtual Address (BF82_#)	Register Name(1)	Bit Range	Bits															All Resets
			31/15	30/14	29/13	28/12	27/11	26/10	25/9	24/8	23/7	22/6	21/5	20/4	19/3	18/2	17/1	16/0	
3084	CFD2FIFOSTA4	31:16	—	—	—	—	—	—	—	—	—	—	—	—	—	—	—	—	0000
		15:0	—	—	—	FIFOCI<4:0>					TXABT	TXLARB	TXERR	TXATIF	RXOVIF	TFERFFIF	TFHRFHIF	TFNRFNIF	0000
3088	CFD2FIFOUA4	31:16	FIFOUA<31:16>																0000
		15:0	FIFOUA<15:0>																0000
308C	CFD2FIFOCON5	31:16	PLSIZE<2:0>			FSIZE<4:0>					—	TXAT<1:0>		TXPRI<4:0>					0000
		15:0	—	—	—	—	—	FRESET	TXREQ	UINC	TXEN	RTREN	RXTSEN	TXATIE	RXOVIE	TFERFFIE	TFHRFHIE	TFNRFNIE	0000
3090	CFD2FIFOSTA5	31:16	—	—	—	—	—	—	—	—	—	—	—	—	—	—	—	—	0000
		15:0	—	—	—	FIFOCI<4:0>					TXABT	TXLARB	TXERR	TXATIF	RXOVIF	TFERFFIF	TFHRFHIF	TFNRFNIF	0000
3094	CFD2FIFOUA5	31:16	FIFOUA<31:16>																0000
		15:0	FIFOUA<15:0>																0000
3098	CFD2FIFOCON6	31:16	PLSIZE<2:0>			FSIZE<4:0>					—	TXAT<1:0>		TXPRI<4:0>					0000
		15:0	—	—	—	—	—	FRESET	TXREQ	UINC	TXEN	RTREN	RXTSEN	TXATIE	RXOVIE	TFERFFIE	TFHRFHIE	TFNRFNIE	0000
309C	CFD2FIFOSTA6	31:16	—	—	—	—	—	—	—	—	—	—	—	—	—	—	—	—	0000
		15:0	—	—	—	FIFOCI<4:0>					TXABT	TXLARB	TXERR	TXATIF	RXOVIF	TFERFFIF	TFHRFHIF	TFNRFNIF	0000
30A0	CFD2FIFOUA6	31:16	FIFOUA<31:16>																0000
		15:0	FIFOUA<15:0>																0000
30A4	CFD2FIFOCON7	31:16	PLSIZE<2:0>			FSIZE<4:0>					—	TXAT<1:0>		TXPRI<4:0>					0000
		15:0	—	—	—	—	—	FRESET	TXREQ	UINC	TXEN	RTREN	RXTSEN	TXATIE	RXOVIE	TFERFFIE	TFHRFHIE	TFNRFNIE	0000
30A8	CFD2FIFOSTA7	31:16	—	—	—	—	—	—	—	—	—	—	—	—	—	—	—	—	0000
		15:0	—	—	—	FIFOCI<4:0>					TXABT	TXLARB	TXERR	TXATIF	RXOVIF	TFERFFIF	TFHRFHIF	TFNRFNIF	0000
30AC	CFD2FIFOUA7	31:16	FIFOUA<31:16>																0000
		15:0	FIFOUA<15:0>																0000

Note 1: The lower order byte of the 32-bit register resides at the low-order address.

2: All registers in CAN-FD does not have corresponding CLR, SET and INV registers at their virtual addresses. SET, INV, CLR needs to be taken care by programming.

© 2020 Microchip Technology Inc.

TABLE 31-1: CAN-FD REGISTER SUMMARY FOR PIC32MZ W1 DEVICES (CONTINUED)

Virtual Address (BF82_#)	Register Name(1)	Bit Range	Bits																All Resets
			31/15	30/14	29/13	28/12	27/11	26/10	25/9	24/8	23/7	22/6	21/5	20/4	19/3	18/2	17/1	16/0	
30B0	CFD2FIFO-CON8	31:16	PLSIZE<2:0>			FSIZE<4:0>					—	TXAT<1:0>		TXPRI<4:0>					0000
		15:0	—	—	—	—	—	FRESET	TXREQ	UINC	TXEN	RTREN	RXTSEN	TXATIE	RXOVIE	TFERF-FIE	TFHRFH IE	TFNRF-NIE	0000
30B4	CFD2FIFOS-TA8	31:16	—	—	—	—	—	—	—	—	—	—	—	—	—	—	—	—	0000
		15:0	—	—	—	FIFOCI<4:0>					TXABT	TXLARB	TXERR	TXATIF	RXOVIF	TFERFFI F	TFHRF-HIF	TFN-RFNIF	0000
30B8	CFD2FIFOUA8	31:16	FIFOUA<31:16>																0000
		15:0	FIFOUA<15:0>																0000
30BC	CFD2FIFO-CON9	31:16	PLSIZE<2:0>			FSIZE<4:0>					—	TXAT<1:0>		TXPRI<4:0>					0000
		15:0	—	—	—	—	—	FRESET	TXREQ	UINC	TXEN	RTREN	RXTSEN	TXATIE	RXOVIE	TFERF-FIE	TFHRFH IE	TFNRF-NIE	0000
30C0	CFD2FIFOS-TA9	31:16	—	—	—	—	—	—	—	—	—	—	—	—	—	—	—	—	0000
		15:0	—	—	—	FIFOCI<4:0>					TXABT	TXLARB	TXERR	TXATIF	RXOVIF	TFERFFI F	TFHRF-HIF	TFN-RFNIF	0000
30C4	CFD2FIFOUA9	31:16	FIFOUA<31:16>																0000
		15:0	FIFOUA<15:0>																0000
30C8	CFD2FIFO-CON10	31:16	PLSIZE<2:0>			FSIZE<4:0>					—	TXAT<1:0>		TXPRI<4:0>					0000
		15:0	—	—	—	—	—	FRESET	TXREQ	UINC	TXEN	RTREN	RXTSEN	TXATIE	RXOVIE	TFERF-FIE	TFHRFH IE	TFNRF-NIE	0000
30CC	CFD2FIFOS-TA10	31:16	—	—	—	—	—	—	—	—	—	—	—	—	—	—	—	—	0000
		15:0	—	—	—	FIFOCI<4:0>					TXABT	TXLARB	TXERR	TXATIF	RXOVIF	TFERFFI F	TFHRF-HIF	TFN-RFNIF	0000
30D0	CFD2FI-FOUA10	31:16	FIFOUA<31:16>																0000
		15:0	FIFOUA<15:0>																0000
30D4	CFD2FIFO-CON11	31:16	PLSIZE<2:0>			FSIZE<4:0>					—	TXAT<1:0>		TXPRI<4:0>					0000
		15:0	—	—	—	—	—	FRESET	TXREQ	UINC	TXEN	RTREN	RXTSEN	TXATIE	RXOVIE	TFERF-FIE	TFHRFH IE	TFNRF-NIE	0000
30D8	CFD2FIFOS-TA11	31:16	—	—	—	—	—	—	—	—	—	—	—	—	—	—	—	—	0000
		15:0	—	—	—	FIFOCI<4:0>					TXABT	TXLARB	TXERR	TXATIF	RXOVIF	TFERFFI F	TFHRF-HIF	TFN-RFNIF	0000

Note 1: The lower order byte of the 32-bit register resides at the low-order address.

2: All registers in CAN-FD does not have corresponding CLR, SET and INV registers at their virtual addresses. SET, INV, CLR needs to be taken care by programming.

© 2020 Microchip Technology Inc.

TABLE 31-1: CAN-FD REGISTER SUMMARY FOR PIC32MZ W1 DEVICES (CONTINUED)

Virtual Address (BF82_ #)	Register Name(1)	Bit Range	Bits																All Resets
			31/15	30/14	29/13	28/12	27/11	26/10	25/9	24/8	23/7	22/6	21/5	20/4	19/3	18/2	17/1	16/0	
30DC	CFD2FIFOUA11	31:16	FIFOUA<31:16>																0000
		15:0	FIFOUA<15:0>																0000
30E0	CFD2FIFOCON12	31:16	PLSIZE<2:0>			FSIZE<4:0>					—	TXAT<1:0>		TXPRI<4:0>					0000
		15:0	—	—	—	—	—	FRESET	TXREQ	UINC	TXEN	RTREN	RXTSEN	TXATIE	RXOVIE	TFERFFIE	TFHRFHIE	TFNRFNIE	0000
30E4	CFD2FIFOSTA12	31:16	—	—	—	—	—	—	—	—	—	—	—	—	—	—	—	—	0000
		15:0	—	—	—	FIFOCI<4:0>					TXABT	TXLARB	TXERR	TXATIF	RXOVIF	TFERFFIF	TFHRFHIF	TFNRFNIF	0000
30E8	CFD2FIFOUA12	31:16	FIFOUA<31:16>																0000
		15:0	FIFOUA<15:0>																0000
30EC	CFD2FIFOCON13	31:16	PLSIZE<2:0>			FSIZE<4:0>					—	TXAT<1:0>		TXPRI<4:0>					0000
		15:0	—	—	—	—	—	FRESET	TXREQ	UINC	TXEN	RTREN	RXTSEN	TXATIE	RXOVIE	TFERFFIE	TFHRFHIE	TFNRFNIE	0000
30F0	CFD2FIFOSTA13	31:16	—	—	—	—	—	—	—	—	—	—	—	—	—	—	—	—	0000
		15:0	—	—	—	FIFOCI<4:0>					TXABT	TXLARB	TXERR	TXATIF	RXOVIF	TFERFFIF	TFHRFHIF	TFNRFNIF	0000
30F4	CFD2FIFOUA13	31:16	FIFOUA<31:16>																0000
		15:0	FIFOUA<15:0>																0000
30F8	CFD2FIFOCON14	31:16	PLSIZE<2:0>			FSIZE<4:0>					—	TXAT<1:0>		TXPRI<4:0>					0000
		15:0	—	—	—	—	—	FRESET	TXREQ	UINC	TXEN	RTREN	RXTSEN	TXATIE	RXOVIE	TFERFFIE	TFHRFHIE	TFNRFNIE	0000
30FC	CFD2FIFOSTA14	31:16	—	—	—	—	—	—	—	—	—	—	—	—	—	—	—	—	0000
		15:0	—	—	—	FIFOCI<4:0>					TXABT	TXLARB	TXERR	TXATIF	RXOVIF	TFERFFIF	TFHRFHIF	TFNRFNIF	0000
3100	CFD2FIFOUA14	31:16	FIFOUA<31:16>																0000
		15:0	FIFOUA<15:0>																0000
3104	CFD2FIFOCON15	31:16	PLSIZE<2:0>			FSIZE<4:0>					—	TXAT<1:0>		TXPRI<4:0>					0000
		15:0	—	—	—	—	—	FRESET	TXREQ	UINC	TXEN	RTREN	RXTSEN	TXATIE	RXOVIE	TFERFFIE	TFHRFHIE	TFNRFNIE	0000

Note 1: The lower order byte of the 32-bit register resides at the low-order address.

2: All registers in CAN-FD does not have corresponding CLR, SET and INV registers at their virtual addresses. SET, INV, CLR needs to be taken care by programming.

© 2020 Microchip Technology Inc.

TABLE 31-1: CAN-FD REGISTER SUMMARY FOR PIC32MZ W1 DEVICES (CONTINUED)

Virtual Address (BF82_#)	Register Name(1)	Bit Range	Bits																All Resets
			31/15	30/14	29/13	28/12	27/11	26/10	25/9	24/8	23/7	22/6	21/5	20/4	19/3	18/2	17/1	16/0	
3108	CFD2FIFOS-TA15	31:16	—	—	—	—	—	—	—	—	—	—	—	—	—	—	—	—	0000
		15:0	—	—	—	FIFOCI<4:0>					TXABT	TXLARB	TXERR	TXATIF	RXOVIF	TFERFFIF	TFHRF-HIF	TFN-RFNIF	0000
310C	CFD2FI-FOUA15	31:16	FIFOUA<31:16>																0000
		15:0	FIFOUA<15:0>																0000
3110	CFD2FLT-CON0	31:16	FLTEN3	—	—	F3BP<4:0>					FLTEN2	—	—	F2BP<4:0>					0000
		15:0	FLTEN1	—	—	F1BP<4:0>					FLTEN0	—	—	F0BP<4:0>					0000
3114	CFD2FLT-CON1	31:16	FLTEN7	—	—	F7BP<4:0>					FLTEN6	—	—	F6BP<4:0>					0000
		15:0	FLTEN5	—	—	F5BP<4:0>					FLTEN4	—	—	F4BP<4:0>					0000
3118	CFD2FLT-CON2	31:16	FLTEN11	—	—	F11BP					FLTEN10	—	—	F10BP					0000
		15:0	—	—	F9BP<4:0>					FLTEN8	—	—	F8BP<4:0>					—	0000
311C	CFD2FLT-CON3	31:16	FLTEN15	—	—	F15BP<4:0>					FLTEN14	—	—	F14BP<4:0>					0000
		15:0	FLTEN13	—	—	F13BP<4:0>					FLTEN12	—	—	F12BP<4:0>					0000
3120	CFD2FLTOBJ0	31:16	—	EXIDE	SID11	EID<17:0>													0000
		15:0	EID<17:0>						SID<10:0>										0000
3124	CFD2MASK0	31:16	—	MIDE	MSID11	MEID<17:0>													0000
		15:0	MEID<17:0>						MSID<10:0>										0000
3128	CFD2FLTOBJ1	31:16	—	EXIDE	SID11	EID<17:0>													0000
		15:0	EID<17:0>						SID<10:0>										0000
312C	CFD2MASK1	31:16	—	MIDE	MSID11	MEID<17:0>													0000
		15:0	MEID<17:0>						MSID<10:0>										0000
3130	CFD2FLTOBJ2	31:16	—	EXIDE	SID11	EID<17:0>													0000
		15:0	EID<17:0>						SID<10:0>										0000
3134	CFD2MASK2	31:16	—	MIDE	MSID11	MEID<17:0>													0000
		15:0	MEID<17:0>						MSID<10:0>										0000

Note 1: The lower order byte of the 32-bit register resides at the low-order address.
2: All registers in CAN-FD does not have corresponding CLR, SET and INV registers at their virtual addresses. SET, INV, CLR needs to be taken care by programming.

© 2020 Microchip Technology Inc.

TABLE 31-1: CAN-FD REGISTER SUMMARY FOR PIC32MZ W1 DEVICES (CONTINUED)

Virtual Address (BF82_#)	Register Name(1)	Bit Range	Bits																All Resets
			31/15	30/14	29/13	28/12	27/11	26/10	25/9	24/8	23/7	22/6	21/5	20/4	19/3	18/2	17/1	16/0	
3138	CFD2FLTOBJ3	31:16	—	EXIDE	SID11	EID<17:0>													0000
		15:0	EID<17:0>					SID<10:0>											0000
313C	CFD2MASK3	31:16	—	MIDE	MSID11	MEID<17:0>													0000
		15:0	MEID<17:0>					MSID<10:0>											0000
3140	CFD2FLTOBJ4	31:16	—	EXIDE	SID11	EID<17:0>													0000
		15:0	EID<17:0>					SID<10:0>											0000
3144	CFD2MASK4	31:16	—	MIDE	MSID11	MEID<17:0>													0000
		15:0	MEID<17:0>					MSID<10:0>											0000
3148	CFD2FLTOBJ5	31:16	—	EXIDE	SID11	EID<17:0>													0000
		15:0	EID<17:0>					SID<10:0>											0000
314C	CFD2MASK5	31:16	—	MIDE	MSID11	MEID<17:0>													0000
		15:0	MEID<17:0>					MSID<10:0>											0000
3150	CFD2FLTOBJ6	31:16	—	EXIDE	SID11	EID<17:0>													0000
		15:0	EID<17:0>					SID<10:0>											0000
3154	CFD2MASK6	31:16	—	MIDE	MSID11	MEID<17:0>													0000
		15:0	MEID<17:0>					MSID<10:0>											0000
3158	CFD2FLTOBJ7	31:16	—	EXIDE	SID11	EID<17:0>													0000
		15:0	EID<17:0>					SID<10:0>											0000
315C	CFD2MASK7	31:16	—	MIDE	MSID11	MEID<17:0>													0000
		15:0	MEID<17:0>					MSID<10:0>											0000
3160	CFD2FLTOBJ8	31:16	—	EXIDE	SID11	EID<17:0>													0000
		15:0	EID<17:0>					SID<10:0>											0000
3164	CFD2MASK8	31:16	—	MIDE	MSID11	MEID<17:0>													0000
		15:0	MEID<17:0>					MSID<10:0>											0000

Note 1: The lower order byte of the 32-bit register resides at the low-order address.

2: All registers in CAN-FD does not have corresponding CLR, SET and INV registers at their virtual addresses. SET, INV, CLR needs to be taken care by programming.

© 2020 Microchip Technology Inc.

TABLE 31-1: CAN-FD REGISTER SUMMARY FOR PIC32MZ W1 DEVICES (CONTINUED)

Virtual Address (BF82_#)	Register Name(1)	Bit Range	Bits																All Resets
			31/15	30/14	29/13	28/12	27/11	26/10	25/9	24/8	23/7	22/6	21/5	20/4	19/3	18/2	17/1	16/0	
3168	CFD2FLTOBJ9	31:16	—	EXIDE	SID11	EID<17:0>													0000
		15:0	EID<17:0>					SID<10:0>											0000
316C	CFD2MASK9	31:16	—	MIDE	MSID11	MEID<17:0>													0000
		15:0	MEID<17:0>					MSID<10:0>											0000
3170	CFD2FLTO-BJ10	31:16	—	EXIDE	SID11	EID<17:0>													0000
		15:0	EID<17:0>					SID<10:0>											0000
3174	CFD2MASK10	31:16	—	MIDE	MSID11	MEID<17:0>													0000
		15:0	MEID<17:0>					MSID<10:0>											0000
3178	CFD2FLTO-BJ11	31:16	—	EXIDE	SID11	EID<17:0>													0000
		15:0	EID<17:0>					SID<10:0>											0000
317C	CFD2MASK11	31:16	—	MIDE	MSID11	MEID<17:0>													0000
		15:0	MEID<17:0>					MSID<10:0>											0000
3180	CFD2FLTO-BJ12	31:16	—	EXIDE	SID11	EID<17:0>													0000
		15:0	EID<17:0>					SID<10:0>											0000
3184	CFD2MASK12	31:16	—	MIDE	MSID11	MEID<17:0>													0000
		15:0	MEID<17:0>					MSID<10:0>											0000
3188	CFD2FLTO-BJ13	31:16	—	EXIDE	SID11	EID<17:0>													0000
		15:0	EID<17:0>					SID<10:0>											0000
318C	CFD2MASK13	31:16	—	MIDE	MSID11	MEID<17:0>													0000
		15:0	MEID<17:0>					MSID<10:0>											0000
3190	CFD2FLTO-BJ14	31:16	—	EXIDE	SID11	EID<17:0>													0000
		15:0	EID<17:0>					SID<10:0>											0000
3194	CFD2MASK14	31:16	—	MIDE	MSID11	MEID<17:0>													0000
		15:0	MEID<17:0>					MSID<10:0>											0000

Note 1: The lower order byte of the 32-bit register resides at the low-order address.

2: All registers in CAN-FD does not have corresponding CLR, SET and INV registers at their virtual addresses. SET, INV, CLR needs to be taken care by programming.

© 2020 Microchip Technology Inc.

TABLE 31-1: CAN-FD REGISTER SUMMARY FOR PIC32MZ W1 DEVICES (CONTINUED)

Virtual Address (BF82_#)	Register Name(1)	Bit Range	Bits																All Resets
			31/15	30/14	29/13	28/12	27/11	26/10	25/9	24/8	23/7	22/6	21/5	20/4	19/3	18/2	17/1	16/0	
3198	CFD2FLTO-BJ15	31:16	—	EXIDE	SID11	EID<17:0>													0000
		15:0	EID<17:0>					SID<10:0>											0000
319C	CFD2MASK15	31:16	—	MIDE	MSID11	MEID<17:0>													0000
		15:0	MEID<17:0>					MSID<10:0>											0000

Note 1: The lower order byte of the 32-bit register resides at the low-order address.

2: All registers in CAN-FD does not have corresponding CLR, SET and INV registers at their virtual addresses. SET, INV, CLR needs to be taken care by programming.

© 2020 Microchip Technology Inc.

REGISTER 31-1: CFD2CON: CAN CONTROL REGISTER

Bit Range	Bit 31/23/15/7	Bit 30/22/14/6	Bit 29/21/13/5	Bit 28/20/12/4	Bit 27/19/11/3	Bit 26/18/10/2	Bit 25/17/9/1	Bit 24/16/8/0
31:24	R/W-0	R/W-0	R/W-0	R/W-0	S/HC-0	R/W-1	R/W-0	R/W-0
	TXBWS<3:0>				ABAT	REQOP<2:0>		
23:16	R-1	R-0	R-0	R/W-1	R/W-1	R/W-0	R/W-0	R/W-0
	OPMOD<2:0>			TXQEN(1)	STEF(1)	SERR2LOM(1)	ESIGM(1)	RTXAT(1)
15:8	R/W-0	R/W-0	R/W-0	R/W-0	R-0	R/W-1	R/W-1	R/W-1
	ON	—	SIDL	BRSDIS	BUSY	WFT<1:0>		WAKFIL(1)
7:0	R/W-0	R/W-1	R/W-1	R/W-0	R/W-0	R/W-0	R/W-0	R/W-0
	CLKSEL0(1)	PXEDIS(1)	ISOCRCEN(1)	DNCNT<4:0>				

Legend:			
R = Readable bit	W = Writable bit	U = Unimplemented bit, read as '0'	
S = Settable bit	C = Clearable bit	x = Bit is unknown at Reset	
'1' = Bit is set at Reset	'0' = Bit is cleared at Reset	HC = Hardware clear	HS = Set by Hardware only

bit 31-28 **TXBWS<3:0>**: Transmit Bandwidth Sharing bits
Delay between two consecutive transmissions (in arbitration bit times)
0000 = No delay
0001 = 2
0010 = 4
0011 = 8
0100 = 16
0101 = 32
0110 = 64
0111 = 128
1000 = 256
1001 = 512
1010 = 1024
1011 = 2048
1111-1100 = 4096

bit 27 **ABAT:** Abort All Pending Transmissions bit
1 = Signal all transmit buffers to abort transmission
0 = Module clears this bit when all transmissions are aborted

bit 26-24 **REQOP<2:0>:** Request Operation Mode bits
000 = Set Normal CAN-FD mode; supports mixing of full CAN-FD and classic CAN 2.0 frames
001 = Set Disable mode
010 = Set Internal Loopback mode
011 = Set Listen Only mode
100 = Set Configuration mode
101 = Set External Loopback mode
110 = Set Normal CAN 2.0 mode; error frames on CAN-FD frames
111 = Set Restricted Operation mode

Note 1: These bits can only be modified in Configuration mode (OPMOD = 100).

REGISTER 31-1: CFD2CON: CAN CONTROL REGISTER (CONTINUED)

bit 23-21 **OPMOD<2:0>:** Operation Mode Status bits
000 = Module is in Normal CAN-FD mode; supports mixing of full CAN-FD and classic CAN 2.0 frames
001 = Module is in Disable mode
010 = Module is in Internal Loopback mode
011 = Module is in Listen Only mode
100 = Module is in Configuration mode
101 = Module is in External Loopback mode
110 = Module is Normal CAN 2.0 mode; error frames on CAN-FD frames
111 = Module is Restricted Operation mode

bit 20 **TXQEN**: Enable Transmit Queue bit(1)
1 = Enables TXQ and reserves space in RAM
0 = Don't reserve space in RAM for TXQ

Note: Changes only in Configuration mode, since it changes the addresses in RAM.

bit 19 **STEF**: Store in Transmit Event FIFO bit(1)
1 = Save transmitted messages in TEF
0 = Don't save transmitted messages in TEF

Note: Changes only in Configuration mode, since it changes the addresses in RAM.

bit 18 **SERR2LOM**: Transition to Listen Only Mode on System Error bit(1)
1 = Transition to Listen Only Mode
0 = Transition to Restricted Operation Mode

bit 17 **ESIGM**: Transmit ESI in Gateway Mode bit(1)
1 = ESI is transmitted as recessive when ESI of message is high or CAN controller error passive
0 = ESI reflects error status of CAN controller

bit 16 **RTXAT**: Restrict Retransmission Attempts bit(1)
1 = Restricted retransmission attempts, use CiFIFOCONm.TXAT
0 = Unlimited number of retransmission attempts, CiFIFOCONm.TXAT is ignored

bit 15 **ON:** Enable bit
1 = CAN module is enabled
0 = CAN module is disabled

bit 14 **Unimplemented:** Read as '0'

bit 13 **SIDL:** Stop in Idle Control bit
1 = Stop module operation in Idle mode
0 = Don't stop module operation in Idle mode

bit 12 **BRSDIS**: Bit Rate Switching Disable bit
1 = Bit Rate Switching is Disabled, regardless of BRS in the Transmit Message Object
0 = Bit Rate Switching depends on BRS in the Transmit Message Object'

bit 11 **BUSY:** CAN Module is Busy bit
1 = The CAN module is active
0 = The CAN module is inactive

bit 10-9 **WFT<1:0>**: Selectable Wake-up Filter Time bits
00 = $T00_{FILTER}$
01 = $T01_{FILTER}$
10 = $T10_{FILTER}$
11 = $T11_{FILTER}$

bit 8 **WAKFIL**: Enable CAN Bus Line Wake-up Filter bit(1)
1 = Use CAN bus line filter for wake-up
0 = CAN bus line filter is not used for wake-up

Note 1: These bits can only be modified in Configuration mode (OPMOD = 100).

 © 2020 Microchip Technology Inc.

REGISTER 31-1: CFD2CON: CAN CONTROL REGISTER (CONTINUED)

bit 7 **CLKSEL0**: Module Clock Source Select bit(1)
1 = PB2_CLK is selected
0 = ETHPLL is selected

bit 6 **PXEDIS**: Protocol Exception Event Detection Disabled bit(1)
A recessive "res bit" following a recessive FDF bit is called a Protocol Exception.
1 = Protocol Exception is treated as a Form Error.
0 = If a Protocol Exception is detected, the CAN enters Bus Integrating state.

bit 5 **ISOCRCEN**: Enable ISO CRC in CAN-FD Frames bit(1)
1 = Include Stuff Bit Count in CRC Field and use Non-Zero CRC Initialization Vector
0 = Do not include Stuff Bit Count in CRC Field and use CRC Initialization Vector with all zeros

bit 4-0 **DNCNT<4:0>:** Device Net Filter Bit Number bits
10011-11111 = Invalid Selection (compare up to 18-bits of data with EID)
10010 = Compare up to data byte 2 bit 6 with EID17
•
•
00001 = Compare up to data byte 0 bit 7 with EID0
00000 = Do not compare data bytes

Note 1: These bits can only be modified in Configuration mode (OPMOD = 100).

REGISTER 31-2: CFD2NBTCFG: NOMINAL BIT TIME CONFIGURATION REGISTER

Bit Range	Bit 31/23/15/7	Bit 30/22/14/6	Bit 29/21/13/5	Bit 28/20/12/4	Bit 27/19/11/3	Bit 26/18/10/2	Bit 25/17/9/1	Bit 24/16/8/0
31:24	R/W-0	R/W-0	R/W-0	R/W-0	R/W-0	R/W-0	R/W-0	R/W-0
	BRP<7:0>							
23:16	R/W-0	R/W-0	R/W-1	R/W-1	R/W-1	R/W-1	R/W-1	R/W-0
	TSEG1<7:0>							
15:8	U-0	R/W-0	R/W-0	R/W-0	R/W-1	R/W-1	R/W-1	R/W-1
	—	TSEG2<6:0>						
7:0	U-0	R/W-0	R/W-0	R/W-0	R/W-0	R/W-0	R/W-0	R/W-0
	—	SJW<6:0>						

Legend:			
R = Readable bit	W = Writable bit	U = Unimplemented bit, read as '0'	
S = Settable bit	C = Clearable bit	x = Bit is unknown at Reset	
'1' = Bit is set at Reset	'0' = Bit is cleared at Reset	HC = Hardware clear	HS = Set by Hardware only

bit 31-24 **BRP<7:0>**: Baud Rate Prescaler bits
1111 1111 = $T_Q = 256/F_{SYS}$
...
0000 0000 = $T_Q = 1/F_{SYS}$

bit 23-16 **TSEG1<7:0>**: Time Segment 1 bits (Propagation Segment + Phase Segment 1)
1111 1111 = Length is 256 x T_Q
...
0000 0000 = Length is 1 x T_Q

bit 15 **Unimplemented:** Read as '0'

bit 14-8 **TSEG2<6:0>**: Time Segment 2 bits (Phase Segment 2)
111 1111 = Length is 128 x T_Q
...
000 0000 = Length is 1 x T_Q

bit 7 **Unimplemented:** Read as '0'

bit 6-0 SJW[6:0]: Synchronization Jump Width bits
111 1111 = Length is 128 x T_Q
...
000 0000 = Length is 1 x T_Q

Note: This register can only be modified in Configuration mode (OPMOD = 100).

 © 2020 Microchip Technology Inc.

REGISTER 31-3: CFD2DBTCFG: DATA BIT TIME CONFIGURATION REGISTER

Bit Range	Bit 31/23/15/7	Bit 30/22/14/6	Bit 29/21/13/5	Bit 28/20/12/4	Bit 27/19/11/3	Bit 26/18/10/2	Bit 25/17/9/1	Bit 24/16/8/0
31:24	R/W-0	R/W-0	R/W-0	R/W-0	R/W-0	R/W-0	R/W-0	R/W-0
	BRP<7:0>							
23:16	U-0	U-0	U-0	R/W-0	R/W-1	R/W-1	R/W-1	R/W-0
	—	—	—	TSEG1<4:0>				
15:8	U-0	U-0	U-0	U-0	R/W-0	R/W-0	R/W-1	R/W-1
	—	—	—	—	TSEG2<6:0>			
7:0	U-0	U-0	U-0	U-0	R/W-0	R/W-0	R/W-1	R/W-1
	—	—	—	—	SJW<6:0>			

Legend:			
R = Readable bit	W = Writable bit	U = Unimplemented bit, read as '0'	
S = Settable bit	C = Clearable bit	x = Bit is unknown at Reset	
'1' = Bit is set at Reset	'0' = Bit is cleared at Reset	HC = Hardware clear	HS = Set by Hardware only

bit 31-24 **BRP<7:0>**: Baud Rate Prescaler bits
1111 1111 = $T_Q = 256/F_{SYS}$
...
0000 0000 = $T_Q = 1/F_{SYS}$

bit 23-21 **Unimplemented:** Read as '0'

bit 20-16 **TSEG1<4:0>**: Time Segment 1 bits (Propagation Segment + Phase Segment 1)
1 1111 = Length is 32 x T_Q
...
0 0000 = Length is 1 x T_Q

bit 15-12 **Unimplemented:** Read as '0'

bit 11-8 **TSEG2<3:0>**: Time Segment 2 bits (Phase Segment 2)
1111 = Length is 16 x T_Q
...
0000 = Length is 1 x T_Q

bit 7-4 **Unimplemented:** Read as '0'

bit 3-0 SJW[6:0]: Synchronization Jump Width bits
1111 = Length is 16 x T_Q
...
0000 = Length is 1 x T_Q

Note: This register can only be modified in Configuration mode (OPMOD = 100).

REGISTER 31-4: CFD2TDC: TRANSMITTER DELAY COMPENSATION REGISTER

Bit Range	Bit 31/23/15/7	Bit 30/22/14/6	Bit 29/21/13/5	Bit 28/20/12/4	Bit 27/19/11/3	Bit 26/18/10/2	Bit 25/17/9/1	Bit 24/16/8/0
31:24	U-0	U-0	U-0	U-0	U-0	U-0	R/W-0	R/W-0
	—	—	—	—	—	—	EDGFLTEN	SID11EN
23:16	U-0	U-0	U-0	U-0	U-0	U-0	R/W-1	R/W-0
	—	—	—	—	—	—	TDCMOD<1:0>	
15:8	U-0	R/W-0	R/W-0	R/W-1	R/W-0	R/W-0	R/W-0	R/W-0
	—	TDCO<6:0>						
7:0	U-0	U-0	R/W-0	R/W-0	R/W-0	R/W-0	R/W-0	R/W-0
	—	—	TDCV<5:0>					

Legend:			
R = Readable bit	W = Writable bit	U = Unimplemented bit, read as '0'	
S = Settable bit	C = Clearable bit	x = Bit is unknown at Reset	
'1' = Bit is set at Reset	'0' = Bit is cleared at Reset	HC = Hardware clear	HS = Set by Hardware only

bit 31-26 **Unimplemented:** Read as '0'

bit 25 **EDGFLTEN**: Enable Edge Filtering during Bus Integration state bit
1 = Edge Filtering enabled, according to ISO11898-1:2015
0 = Edge Filtering disabled

bit 24 **SID11EN**: Enable 12-Bit SID in CAN-FD Base Format Messages bit
1 = RRS is used as SID11 in CAN-FD base format messages: SID[11:0] = {SID[10:0], SID11}
0 = Don't use RRS; SID[10:0] according to ISO11898-1:2015

bit 23-18 **Unimplemented:** Read as '0'

bit 17-16 **TDCMOD<1:0>**: Transmitter Delay Compensation Mode bits; Secondary Sample Point (SSP)
10-11 Auto; measure delay and add CFD2DBTCFG.TSEG1; add TDCO.
01 = Manual; Don't measure, use TDCV + TDCO from register
00 = Disable

bit 15 **Unimplemented:** Read as '0'

bit 14-8 **TDCO<6:0>**: Transmitter Delay Compensation Offset bits; Secondary Sample Point (SSP)
Two's complement; offset can be positive, zero, or negative.
011 1111 = 63 x T_{SYS_CLK}
...
000 0000 = 0 x T_{SYS_CLK}
...
111 1111 = -64 x T_{SYS_CLK}

bit 7-6 **Unimplemented:** Read as '0'

bit 5-0 **TDCV<5:0>**: Transmitter Delay Compensation Value bits; Secondary Sample Point (SSP)
11 1111 = 63 x T_{SYS_CLK}
...
00 0000 = 0 x T_{SYS_CLK}

Note: This register can only be modified in Configuration mode (OPMOD = 100).

 © 2020 Microchip Technology Inc.

REGISTER 31-5: CFD2TBC: CAN TIME BASE COUNTER REGISTER

Bit Range	Bit 31/23/15/7	Bit 30/22/14/6	Bit 29/21/13/5	Bit 28/20/12/4	Bit 27/19/11/3	Bit 26/18/10/2	Bit 25/17/9/1	Bit 24/16/8/0
31:24	R/W-0	R/W-0	R/W-0	R/W-0	R/W-0	R/W-0	R/W-0	R/W-0
	TBC<31:24>							
23:16	R/W-0	R/W-0	R/W-0	R/W-0	R/W-0	R/W-0	R/W-0	R/W-0
	TBC<23:16>							
15:8	R/W-0	R/W-0	R/W-0	R/W-0	R/W-0	R/W-0	R/W-0	R/W-0
	TBC<15:8>							
7:0	R/W-0	R/W-0	R/W-0	R/W-0	R/W-0	R/W-0	R/W-0	R/W-0
	TBC<7:0>							

Legend:			
R = Readable bit	W = Writable bit	U = Unimplemented bit, read as '0'	
S = Settable bit	C = Clearable bit	x = Bit is unknown at Reset	
'1' = Bit is set at Reset	'0' = Bit is cleared at Reset	HC = Hardware clear	HS = Set by Hardware only

bit 31-0 **TBC**: CAN Base Counter bits
This is a free running timer that increments every TBCPRE clock when TBCEN is set.

Note 1: The TBC will be stopped and reset when TBCEN = 0 to save power.
2: The TBC prescaler count will be reset on any write to CFD2TBC (TBCPRE will be unaffected).

REGISTER 31-6: CFD2TSCON: CAN TIME STAMP CONTROL REGISTER

Bit Range	Bit 31/23/15/7	Bit 30/22/14/6	Bit 29/21/13/5	Bit 28/20/12/4	Bit 27/19/11/3	Bit 26/18/10/2	Bit 25/17/9/1	Bit 24/16/8/0
31:24	U-0	U-0	U-0	U-0	U-0	U-0	U-0	U-0
	—	—	—	—	—	—	—	—
23:16	U-0	U-0	U-0	U-0	U-0	R/W-0	R/W-0	R/W-0
	—	—	—	—	—	TSRES	TSEOF	TBCEN
15:8	U-0	U-0	U-0	U-0	U-0	U-0	R/W-0	R/W-0
	—	—	—	—	—	—	TBCPRE<9:8>	
7:0	R/W-0	R/W-0	R/W-0	R/W-0	R/W-0	R/W-0	R/W-0	R/W-0
	TBCPRE<7:0>							

Legend:			
R = Readable bit	W = Writable bit	U = Unimplemented bit, read as '0'	
S = Settable bit	C = Clearable bit	x = Bit is unknown at Reset	
'1' = Bit is set at Reset	'0' = Bit is cleared at Reset	HC = Hardware clear	HS = Set by Hardware only

bit 31-19 **Unimplemented:** Read as '0'

bit 18 **TSRES:** Time Stamp res bit (FD Frames only)
1 = at sample point of the bit following the FDF bit.
0 = at sample point of SOF

bit 17 **TSEOF**: Time Stamp EOF bit
1 = Time Stamp when frame is taken valid (11898-1 10.7):
- RX no error until last but one bit of EOF)
- TX no error until the end of EOF

0 = Time Stamp at "beginning" of Frame:
- Classical Frame: at sample point of SOF
- FD Frame: see TSRES bit.

bit 16 **TBCEN**: Time Base Counter Enable bit
1 = Enable TBC
0 = Stop and reset TBC

bit 15-10 **Unimplemented:** Read as '0'

bit 9-0 **TBCPRE<9:0>**: CAN Time Base Counter Prescaler bits
1023 = TBC increments every 1024 clocks
.
.
.
0 = TBC increments every 1 clock

 © 2020 Microchip Technology Inc.

REGISTER 31-7: CFD2VEC: INTERRUPT CODE REGISTER

Bit Range	Bit 31/23/15/7	Bit 30/22/14/6	Bit 29/21/13/5	Bit 28/20/12/4	Bit 27/19/11/3	Bit 26/18/10/2	Bit 25/17/9/1	Bit 24/16/8/0
31:24	U-0	R-1	R-0	R-0	R-0	R-0	R-0	R-0
	—	RXCODE(1)<6:0>						
23:16	U-0	R-1	R-0	R-0	R-0	R-0	R-0	R-0
	—	TXCODE(1)<6:0>						
15:8	U-0	U-0	U-0	R-0	R-0	R-0	R-0	R-0
	—	—	—	FILHIT(1)<4:0>				
7:0	U-0	R-1	R-0	R-0	R-0	R-0	R-0	R-0
	—	ICODE(1)<6:0>						

Legend:			
R = Readable bit	W = Writable bit	U = Unimplemented bit, read as '0'	
S = Settable bit	C = Clearable bit	x = Bit is unknown at Reset	
'1' = Bit is set at Reset	'0' = Bit is cleared at Reset	HC = Hardware clear	HS = Set by Hardware only

bit 31 **Unimplemented:** Read as '0'

bit 30-24 **RXCODE<6:0>**: Receive Interrupt Flag Code bits(1)

1000001-1111111 = Reserved
1000000 = No interrupt
0100000-0111111 = Reserved
0011111 = FIFO 31 interrupt (RFIF[31] set)
.
.
.
0000010 = FIFO 2 interrupt (RFIF[2] set)
0000001 = FIFO 1 interrupt (RFIF[1] set)
0000000 = Reserved. FIFO 0 cannot receive.

bit 23 **Unimplemented:** Read as '0'

bit 22-16 **TXCODE<6:0>**: Transmit Interrupt Flag Code bits(1)

1000001-1111111 = Reserved
1000000 = No interrupt
0100000-0111111 = Reserved
0011111 = FIFO 31 interrupt (TFIF[31] set)
.
.
.
0000001 = FIFO 1 interrupt (TFIF[1] set)
0000000 = FIFO 0 interrupt (TFIF[0] set)

bit 15-13 **Unimplemented:** Read as '0'

bit 12-8 **FILHIT<4:0>**: Filter Hit Number bits(1)

11111 = Filter 31
11110 = Filter 30
.
.
.
00001 = Filter 1
00000 = Filter 0

bit 7 **Unimplemented:** Read as '0'

Note 1: CFD2VEC: If multiple interrupts are pending, the interrupt with the highest number will be indicated.

REGISTER 31-7: CFD2VEC: INTERRUPT CODE REGISTER (CONTINUED)

bit 6-0 **ICODE<6:0>**: Interrupt Flag Code bits(1)

1001011-1111111 = Reserved
1001010 = Transmit attempt interrupt (any bit in CiTXATIF set)
1001001 = Transmit event FIFO interrupt (any bit in CiTEFIF set)
1001000 = Invalid message occurred (IVMIF/IE)
1000111 = CAN Module Mode Change Occurred (MODIF/IE)
1000110 = CAN Timer Overflow (CTMRIF/IE)
1000101 = RX/TX MAB Overflow/Underflow (RX: message received before previous message is saved to memory; TX: cannot feed TX MAB fast enough to transmit consistent data.) (SERRIF/IE)
1000100 = Address error interrupt (illegal FIFO address presented to system) (SERRIF/IE)
1000011 = Receive FIFO overflow interrupt (any bit in CiRXOVIF set)
1000010 = Wake-up interrupt (WAKIF/WAKIE)
1000001 = Error interrupt (CERRIF/IE)
1000000 = No interrupt
0100000-0111111 = Reserved
0011111 = FIFO 31 interrupt (TFIF[31] or RFIF[31] set)
.
.
.
0000001 = FIFO 1 interrupt (TFIF[1] or RFIF[1] set)
0000000 = FIFO 0 interrupt (TFIF[0] set)

Note 1: CFD2VEC: If multiple interrupts are pending, the interrupt with the highest number will be indicated.

 © 2020 Microchip Technology Inc.

REGISTER 31-8: CFD2INT: INTERRUPT REGISTER

Bit Range	Bit 31/23/15/7	Bit 30/22/14/6	Bit 29/21/13/5	Bit 28/20/12/4	Bit 27/19/11/3	Bit 26/18/10/2	Bit 25/17/9/1	Bit 24/16/8/0
31:24	R/W-0	R/W-0	R/W-0	R/W-0	R/W-0	R/W-0	R/W-0	R/W-0
	IVMIE	WAKIE	CERRIE	SERRIE	RXOVIE	TXATIE	SPICRCIE	ECCIE
23:16	U-0	U-0	U-0	R/W-0	R/W-0	R/W-0	R/W-0	R/W-0
	—	—	—	TEFIE	MODIE	TBCIE	RXIE	TXIE
15:8	HS/C-0	HS/C-0	HS/C-0	HS/C-0	R-0	R-0	R-0	R-0
	IVMIF(1)	WAKIF(1)	CERRIF(1)	SERRIF(1)	RXOVIF	TXATIF	SPICRCIF	ECCIF
7:0	U-0	U-0	U-0	R-0	HS/C-0	HS/C-0	R-0	R-0
	—	—	—	TEFIF	MODIF(1)	TBCIF(1)	RXIF	TXIF

Legend:			
R = Readable bit	W = Writable bit	U = Unimplemented bit, read as '0'	
S = Settable bit	C = Clearable bit	x = Bit is unknown at Reset	
'1' = Bit is set at Reset	'0' = Bit is cleared at Reset	HC = Hardware clear	HS = Set by Hardware only

bit 31 **IVMIE**: Invalid Message Interrupt Enable bit
bit 30 **WAKIE**: Bus Wake Up Activity Interrupt Enable bit
bit 29 **CERRIE**: CAN Bus Error Interrupt Enable bit
bit 28 **SERRIE**: System Error Interrupt Enable bit
bit 27 **RXOVIE**: Receive Buffer Overflow Interrupt Enable bit
bit 26 **TXATIE**: Transmit Attempt Interrupt Enable bit
bit 25 **SPICRCIE**: SPI CRC Error Interrupt Enable bit
bit 24 **ECCIE**: ECC Error Interrupt Enable bit
bit 23-21 **Unimplemented:** Read as '0'
bit 20 **TEFIE**: Transmit Event FIFO Interrupt Enable bit
bit 19 **MODIE**: Mode Change Interrupt Enable bit
bit 18 **TBCIE**: CAN Timer Interrupt Enable bit
bit 17 **RXIE**: Receive Object Interrupt Enable bit
bit 16 **TXIE**: Transmit Object Interrupt Enable bit
bit 15 **IVMIF**: Invalid Message Interrupt Flag bit(1)
bit 14 **WAKIF**: Bus Wake Up Activity Interrupt Flag bit(1)
bit 13 **CERRIF**: CAN Bus Error Interrupt Flag bit(1)
bit 12 **SERRIF**: System Error Interrupt Flag bit(1)
1 = A system error occurred (collision on dual-port RAM)
0 = No system error occurred
bit 11 **RXOVIF**: Receive Object Overflow Interrupt Flag bit
1 = Receive object overflow occurred
0 = No receive object overflow has occurred
bit 10 **TXATIF**: Transmit Attempt Interrupt Flag bit
bit 9 **SPICRCIF**: SPI CRC Error Interrupt Flag bit
bit 8 **ECCIF**: ECC Error Interrupt Flag bit
bit 7-5 **Unimplemented:** Read as '0'

Note 1: CFD2INT: Flags are set by hardware and cleared by application.

REGISTER 31-8: CFD2INT: INTERRUPT REGISTER (CONTINUED)

bit 4 **TEFIF**: Transmit Event FIFO Interrupt Flag bit
1 = Receive buffer overflow occurred
0 = No receive buffer overflow has occurred

bit 3 **MODIF**: CAN Mode Change Interrupt Flag bit(1)
1 = CAN Module mode change occurred (OPMOD has changed to reflect REQOP)
0 = No mode change occurred

bit 2 **TBCIF**: CAN Timer Overflow Interrupt Flag bit(1)
1 = TBC has overflowed
0 = TBC does not overflow

bit 1 **RXIF**: Receive Object Interrupt Flag bit
1 = Receive object interrupt is pending
0 = No receive object interrupt is pending

bit 0 **TXIF**: Transmit Object Interrupt Flag bit
1 = Transmit object interrupt is pending
0 = No transmit object interrupt is pending

Note 1: CFD2INT: Flags are set by hardware and cleared by application.

 © 2020 Microchip Technology Inc.

REGISTER 31-9: CFD2RXIF: RECEIVE INTERRUPT STATUS REGISTER

Bit Range	Bit 31/23/15/7	Bit 30/22/14/6	Bit 29/21/13/5	Bit 28/20/12/4	Bit 27/19/11/3	Bit 26/18/10/2	Bit 25/17/9/1	Bit 24/16/8/0
31:24	R-0	R-0	R-0	R-0	R-0	R-0	R-0	R-0
	RFIF(1)<31:24>							
23:16	R-0	R-0	R-0	R-0	R-0	R-0	R-0	R-0
	RFIF(1)<23:16>							
15:8	R-0	R-0	R-0	R-0	R-0	R-0	R-0	R-0
	RFIF(1)<15:8>							
7:0	R-0	R-0	R-0	R-0	R-0	R-0	R-0	U-0
	RFIF(1)<7:1>							—

Legend:			
R = Readable bit	W = Writable bit	U = Unimplemented bit, read as '0'	
S = Settable bit	C = Clearable bit	x = Bit is unknown at Reset	
'1' = Bit is set at Reset	'0' = Bit is cleared at Reset	HC = Hardware clear	HS = Set by Hardware only

bit 31-1 **RFIF<31:1>**: Receive FIFO Interrupt Pending bits(1)
1 = One or more enabled receive FIFO interrupts are pending
0 = No enabled receive FIFO interrupts are pending

bit 0 **Unimplemented:** Read as '0'

Note 1: CFD2RXIF: FIFO: RFIF = 'or' of enabled RXFIFO flags; (flags need to be cleared in FIFO register)

REGISTER 31-10: CFD2RXOVIF: RECEIVE OVERFLOW INTERRUPT STATUS REGISTER

Bit Range	Bit 31/23/15/7	Bit 30/22/14/6	Bit 29/21/13/5	Bit 28/20/12/4	Bit 27/19/11/3	Bit 26/18/10/2	Bit 25/17/9/1	Bit 24/16/8/0
31:24	R-0	R-0	R-0	R-0	R-0	R-0	R-0	R-0
	RFOVIF(1)<31:24>							
23:16	R-0	R-0	R-0	R-0	R-0	R-0	R-0	R-0
	RFOVIF(1)<23:16>							
15:8	R-0	R-0	R-0	R-0	R-0	R-0	R-0	R-0
	RFOVIF(1)<15:8>							
7:0	R-0	R-0	R-0	R-0	R-0	R-0	R-0	U-0
	RFOVIF(1)<7:1>							—

Legend:			
R = Readable bit	W = Writable bit	U = Unimplemented bit, read as '0'	
S = Settable bit	C = Clearable bit	x = Bit is unknown at Reset	
'1' = Bit is set at Reset	'0' = Bit is cleared at Reset	HC = Hardware clear	HS = Set by Hardware only

bit 31-1 **RFOVIF<31:1>**: Receive FIFO Overflow Interrupt Pending bits(1)
1 = Interrupt is pending
0 = Interrupt is not pending

bit 0 **Unimplemented:** Read as '0'

Note 1: CFD2RXOVIF: FIFO: RFOVIF (flag needs to be cleared in FIFO register)

 © 2020 Microchip Technology Inc.

REGISTER 31-11: CFD2TXIF: TRANSMIT INTERRUPT STATUS REGISTER

Bit Range	Bit 31/23/15/7	Bit 30/22/14/6	Bit 29/21/13/5	Bit 28/20/12/4	Bit 27/19/11/3	Bit 26/18/10/2	Bit 25/17/9/1	Bit 24/16/8/0
31:24	R-0	R-0	R-0	R-0	R-0	R-0	R-0	R-0
	TFIF(1)<31:24>							
23:16	R-0	R-0	R-0	R-0	R-0	R-0	R-0	R-0
	TFIF(1)<23:16>							
15:8	R-0	R-0	R-0	R-0	R-0	R-0	R-0	R-0
	TFIF(1)<15:8>							
7:0	R-0	R-0	R-0	R-0	R-0	R-0	R-0	R-0
	TFIF(1)<7:0>							

Legend:			
R = Readable bit	W = Writable bit	U = Unimplemented bit, read as '0'	
S = Settable bit	C = Clearable bit	x = Bit is unknown at Reset	
'1' = Bit is set at Reset	'0' = Bit is cleared at Reset	HC = Hardware clear	HS = Set by Hardware only

bit 31-0 **TFIF<31:0>**: Transmit FIFO/TXQ(2) Interrupt Pending bits(1)
1 = One or more enabled transmit FIFO/TXQ interrupts are pending
0 = No enabled transmit FIFO/TXQ interrupts are pending

Note 1: CFD2TXIF: FIFO: TFIF = 'or' of the enabled TXFIFO flags; (flags need to be cleared in FIFO register)
2: TFIF[0] is for the Transmit Queue.

REGISTER 31-12: CFD2TXATIF: TRANSMIT ATTEMPT INTERRUPT STATUS REGISTER

Bit Range	Bit 31/23/15/7	Bit 30/22/14/6	Bit 29/21/13/5	Bit 28/20/12/4	Bit 27/19/11/3	Bit 26/18/10/2	Bit 25/17/9/1	Bit 24/16/8/0
31:24	R-0	R-0	R-0	R-0	R-0	R-0	R-0	R-0
	TFATIF(1)<31:24>							
23:16	R-0	R-0	R-0	R-0	R-0	R-0	R-0	R-0
	TFATIF(1)<23:16>							
15:8	R-0	R-0	R-0	R-0	R-0	R-0	R-0	R-0
	TFATIF(1)<15:8>							
7:0	R-0	R-0	R-0	R-0	R-0	R-0	R-0	R-0
	TFATIF(1)<7:0>							

Legend:			
R = Readable bit	W = Writable bit	U = Unimplemented bit, read as '0'	
S = Settable bit	C = Clearable bit	x = Bit is unknown at Reset	
'1' = Bit is set at Reset	'0' = Bit is cleared at Reset	HC = Hardware clear	HS = Set by Hardware only

bit 31-0 **TFATIF<31:0>**: Transmit FIFO/TXQ(2) Attempt Interrupt Pending bits(1)
1 = Interrupt is pending
0 = Interrupt is not pending

Note 1: CFD2TXATIF: FIFO: TFATIF (flag needs to be cleared in FIFO register)
2: TFATIF[0] is for the Transmit Queue.

 © 2020 Microchip Technology Inc.

REGISTER 31-13: CFD2TXREQ: TRANSMIT REQUEST REGISTER

Bit Range	Bit 31/23/15/7	Bit 30/22/14/6	Bit 29/21/13/5	Bit 28/20/12/4	Bit 27/19/11/3	Bit 26/18/10/2	Bit 25/17/9/1	Bit 24/16/8/0
31:24	S(1)/HC-0	S(1)/HC-0	S(1)/HC-0	S(1)/HC-0	S(1)/HC-0	S(1)/HC-0	S(1)/HC-0	S(1)/HC-0
	TXREQ<31:24>							
23:16	S(1)/HC-0	S(1)/HC-0	S(1)/HC-0	S(1)/HC-0	S(1)/HC-0	S(1)/HC-0	S(1)/HC-0	S(1)/HC-0
	TXREQ<23:16>							
15:8	S(1)/HC-0	S(1)/HC-0	S(1)/HC-0	S(1)/HC-0	S(1)/HC-0	S(1)/HC-0	S(1)/HC-0	S(1)/HC-0
	TXREQ<15:8>							
7:0	S(1)/HC-0	S(1)/HC-0	S(1)/HC-0	S(1)/HC-0	S(1)/HC-0	S(1)/HC-0	S(1)/HC-0	S(1)/HC-0
	TXREQ<7:0>							

Legend:			
R = Readable bit	W = Writable bit	U = Unimplemented bit, read as '0'	
S = Settable bit	C = Clearable bit	x = Bit is unknown at Reset	
'1' = Bit is set at Reset	'0' = Bit is cleared at Reset	HC = Hardware clear	HS = Set by Hardware only

bit 31-1 **TXREQ<31:1>**: Message Send Request bits
TXEN = 1 (Object configured as a Transmit Object)
Setting this bit to '1' requests sending a message.
The bit is automatically cleared when the message(s) queued in the object is (are) successfully sent.
This bit can not be used for aborting a transmission.
TXEN = 0 (Object configured as a Receive Object)
This bit has no effect.

bit 0 **TXREQ<0>**: Transmit Queue Message Send Request bit
Setting this bit to '1' requests sending a message.
The bit is automatically cleared when the message(s) queued in the object is (are) successfully sent.
This bit can not be used for aborting a transmission.

Note 1: The TXREQ[x] bit represents the corresponding FIFO[x] message.

REGISTER 31-14: CFD2FIFOBA: MESSAGE MEMORY BASE ADDRESS REGISTER

Bit Range	Bit 31/23/15/7	Bit 30/22/14/6	Bit 29/21/13/5	Bit 28/20/12/4	Bit 27/19/11/3	Bit 26/18/10/2	Bit 25/17/9/1	Bit 24/16/8/0
31:24	R/W-0	R/W-0	R/W-0	R/W-0	R/W-0	R/W-0	R/W-0	R/W-0
	FIFOBA<31:24>							
23:16	R/W-0	R/W-0	R/W-0	R/W-0	R/W-0	R/W-0	R/W-0	R/W-0
	FIFOBA<23:16>							
15:8	R/W-0	R/W-0	R/W-0	R/W-0	R/W-0	R/W-0	R/W-0	R/W-0
	FIFOBA<15:8>							
7:0	R/W-0	R/W-0	R/W-0	R/W-0	R/W-0	R/W-0	U-0(1)	U-0(1)
	FIFOBA<7:0>							

Legend:			
R = Readable bit	W = Writable bit	U = Unimplemented bit, read as '0'	
S = Settable bit	C = Clearable bit	x = Bit is unknown at Reset	
'1' = Bit is set at Reset	'0' = Bit is cleared at Reset	HC = Hardware clear	HS = Set by Hardware only

bit 31-0 **FIFOBA<31:0>**: Message Memory Base Address bits
Defines the base address for Transmit Event FIFO followed by the message objects.

Note 1: CFD2FIFOBA: Bits[1:0] are forced to '0' to be word aligned.
2: CFD2FIFOBA: This register can only be modified in Configuration mode (OPMOD = 100).

 © 2020 Microchip Technology Inc.

REGISTER 31-15: CFD2TXQCON: TRANSMIT QUEUE CONTROL REGISTER

Bit Range	Bit 31/23/15/7	Bit 30/22/14/6	Bit 29/21/13/5	Bit 28/20/12/4	Bit 27/19/11/3	Bit 26/18/10/2	Bit 25/17/9/1	Bit 24/16/8/0
31:24	R/W-0	R/W-0	R/W-0	R/W-0	R/W-0	R/W-0	R/W-0	R/W-0
	PLSIZE<2:0>(1)			FSIZE<4:0>(1)				
23:16	U-0	R/W-1	R/W-1	R/W-0	R/W-0	R/W-0	R/W-0	R/W-0
	—	TXAT<1:0>		TXPR<4:0>				
15:8	U-0	U-0	U-0	U-0	U-0	S/HC-1	R/W/HC-0	S/HC-0
	—	—	—	—	—	FRESET(3)	TXREQ(2)	UINC
7:0	R-1	U-0	U-0	R/W-0	U-0	R/W-0	U-0	R/W-0
	TXEN	—	—	TXATIE	—	TXQEIE	—	TXQNIE

Legend:			
R = Readable bit	W = Writable bit	U = Unimplemented bit, read as '0'	
S = Settable bit	C = Clearable bit	x = Bit is unknown at Reset	
'1' = Bit is set at Reset	'0' = Bit is cleared at Reset	HC = Hardware clear	HS = Set by Hardware only

bit 31-29 **PLSIZE<2:0>**: Payload Size bits(1)
- 000 = 8 data bytes
- 001 = 12 data bytes
- 010 = 16 data bytes
- 011 = 20 data bytes
- 100 = 24 data bytes
- 101 = 32 data bytes
- 110 = 48 data bytes
- 111 = 64 data bytes

bit 28-14 **FSIZE<4:0>**: FIFO Size bits(1)
- 0_0000 = FIFO is 1 Message deep
- 0_0001 = FIFO is 2 Messages deep
- 0_0002 = FIFO is 3 Messages deep
- .
- .
- .
- 1_1111 = FIFO is 32 Messages deep

bit 23 **Unimplemented:** Read as '0'

bit 22-21 **TXAT<1:0>**: Retransmission Attempts bits
This feature is enabled when CFD2CON.RTXAT is set.
- 00 = Disable retransmission attempts
- 01 = Three retransmission attempts
- 10 = Unlimited number of retransmission attempts
- 11 = Unlimited number of retransmission attempts

Note: Application must be able to change these bits in Normal mode. This can be used to go back on the bus after bus off to check if transmission works again.

bit 20-16 **TXPRI<4:0>**: Message Transmit Priority bits
- 00000 = Lowest Message Priority
- .
- .
- .
- 11111 = Highest Message Priority

Note 1: These bits can only be modified in Configuration mode (OPMOD = 100).
2: This bit is updated when a message completes (or aborts) or when the FIFO is reset.
3: FRESET is set while in Configuration mode and is automatically cleared in Normal mode.

REGISTER 31-15: CFD2TXQCON: TRANSMIT QUEUE CONTROL REGISTER (CONTINUED)

bit 15-11 **Unimplemented:** Read as '0'

bit 10 **FRESET**: FIFO Reset bit(3)
1 = FIFO is reset when the bit is set and cleared by hardware when FIFO is reset. User should poll whether this bit is clear, before taking any action.
0 = No effect

bit 9 **TXREQ**: Message Send Request bit(2)
1 = Requests sending a message; the bit is automatically cleared when all the messages queued in the TXQ are successfully sent
0 = Clearing the bit to '0' while set ('1') requests a message abort.

bit 8 **UINC**: Increment Head/Tail bit
When this bit is set, the FIFO head increments by a single message.

bit 7 **TXEN**: TX Enable
1 = Transmit Message Queue. This bit always reads 1.

bit 6-5 **Unimplemented:** Read as '0'

bit 4 **TXATIE**: Transmit Attempts Exhausted Interrupt Enable bit
1 = Enable interrupt
0 = Disable interrupt

bit 3 **Unimplemented:** Read as '0'

bit 2 **TXQEIE**: Transmit Queue Empty Interrupt Enable bit
1 = Interrupt enabled for TXQ empty
0 = Interrupt disabled for TXQ empty

bit 1 **Unimplemented:** Read as '0'

bit 0 **TXQNIE**: Transmit Queue Not Full Interrupt Enable bit
1 = Interrupt enabled for TXQ not full
0 = Interrupt disabled for TXQ not full

Note 1: These bits can only be modified in Configuration mode (OPMOD = 100).
2: This bit is updated when a message completes (or aborts) or when the FIFO is reset.
3: FRESET is set while in Configuration mode and is automatically cleared in Normal mode.

 © 2020 Microchip Technology Inc.

REGISTER 31-16: CFD2TXQSTA: TRANSMIT QUEUE STATUS REGISTER

Bit Range	Bit 31/23/15/7	Bit 30/22/14/6	Bit 29/21/13/5	Bit 28/20/12/4	Bit 27/19/11/3	Bit 26/18/10/2	Bit 25/17/9/1	Bit 24/16/8/0
31:24	U-0	U-0	U-0	U-0	U-0	U-0	U-0	U-0
	—	—	—	—	—	—	—	—
23:16	U-0	U-0	U-0	U-0	U-0	U-0	U-0	U-0
	—	—	—	—	—	—	—	—
15:8	U-0	U-0	U-0	R-0	R-0	R-0	R-0	R-0
	—	—	—	TXQCI<4:0>(1)				
7:0	R-0	R-0	R-0	HS/C-0	U-0	R-1	U-0	R-1
	TXABT(3,2)	TXLARB(3,2)	TXERR(3,2)	TXATIF	—	TXQEIF	—	TXQNIF

Legend:			
R = Readable bit	W = Writable bit	U = Unimplemented bit, read as '0'	
S = Settable bit	C = Clearable bit	x = Bit is unknown at Reset	
'1' = Bit is set at Reset	'0' = Bit is cleared at Reset	HC = Hardware clear	HS = Set by Hardware only

bit 31-13 **Unimplemented:** Read as '0'

bit 12-8 **TXQCI<4:0>**: Transmit Queue Message Index bits(1)
A read of this register returns an index to the message that the FIFO attempts to transmit next.

bit 7 **TXABT**: Message Aborted Status bit(3,2)
1 = Message is aborted
0 = Message completed successfully

bit 6 **TXLARB**: Message Lost Arbitration Status bit(3,2)
1 = Message lost arbitration while being sent
0 = Message does not loose arbitration while being sent

bit 5 **TXERR**: Error Detected During Transmission bit(3,2)
1 = A bus error occurs while the message is being sent
0 = A bus error does not occur while the message is being sent

bit 4 **TXATIF**: Transmit Attempts Exhausted Interrupt Pending bit
1 = Interrupt is pending
0 = Interrupt is not pending

bit 3 **Unimplemented:** Read as '0'

bit 2 **TXQEIF**: Transmit Queue Empty Interrupt Flag bit
1 = TXQ is empty
0 = TXQ is not empty, at least 1 message queued to be transmitted

bit 1 **Unimplemented:** Read as '0'

bit 0 **TXQNIF**: Transmit Queue Not Full Interrupt Flag bit
1 = TXQ is not full
0 = TXQ is full

Note 1: TXQCI<4:0> gives a zero-indexed value to the message in the TXQ. If the TXQ is 4 messages deep (FSIZE=5'h03) TXQCI will take on a value of 0 to 3 depending on the state of the TXQ.

2: This bit is reset on any read of this register or when the TXQ is reset.

3: This bit is updated when a message completes (or aborts) or when the TXQ is reset.

REGISTER 31-17: CFD2FIFOCONm: FIFO CONTROL REGISTER m, (m = 1 to 15)

Bit Range	Bit 31/23/15/7	Bit 30/22/14/6	Bit 29/21/13/5	Bit 28/20/12/4	Bit 27/19/11/3	Bit 26/18/10/2	Bit 25/17/9/1	Bit 24/16/8/0
31:24	R/W-0	R/W-0	R/W-0	R/W-0	R/W-0	R/W-0	R/W-0	R/W-0
	PLSIZE<2:0>(1)			FSIZE<4:0>(1)				
23:16	U-0	R/W-1	R/W-1	R/W-0	R/W-0	R/W-0	R/W-0	R/W-0
	—	TXAT<1:0>		TXPR<4:0>				
15:8	U-0	U-0	U-0	U-0	U-0	S/HC-1	R/W/HC-0	S/HC-0
	—	—	—	—	—	FRESET(3)	TXREQ(2)	UINC
7:0	R/W-0	R/W-0	R/W-0	R/W-0	R/W-0	R/W-0	R/W-0	R/W-0
	TXEN(1)	RTREN	RXTSEN(1)	TXATIE	RXOVIE	TFERFFIE	TFHRFHIE	TFNRFNIE

Legend:			
R = Readable bit	W = Writable bit	U = Unimplemented bit, read as '0'	
S = Settable bit	C = Clearable bit	x = Bit is unknown at Reset	
'1' = Bit is set at Reset	'0' = Bit is cleared at Reset	HC = Hardware clear	HS = Set by Hardware only

bit 31-29 **PLSIZE<2:0>**: Payload Size bits(1)
- 000 = 8 data bytes
- 001 = 12 data bytes
- 010 = 16 data bytes
- 011 = 20 data bytes
- 100 = 24 data bytes
- 101 = 32 data bytes
- 110 = 48 data bytes
- 111 = 64 data bytes

bit 28-24 **FSIZE<4:0>**: FIFO Size bits(1)
- 0_0000 = FIFO is 1 Message deep
- 0_0001 = FIFO is 2 Messages deep
- 0_0002 = FIFO is 3 Messages deep
- .
- .
- .
- 1_1111 = FIFO is 32 Messages deep

bit 23 **Unimplemented:** Read as '0'

bit 22-21 **TXAT<1:0>**: Retransmission Attempts bits
This feature is enabled when CFD2.RTXAT is set.
- 00 = Disable retransmission attempts
- 01 = Three retransmission attempts
- 10 = Unlimited number of retransmission attempts
- 11 = Unlimited number of retransmission attempts

Note: Application must be able to change these bits in Normal mode. This can be used to go back on the bus after bus off to check if transmission works again.

bit 20-16 **TXPRI<4:0>**: Message Transmit Priority bits
- 00000 = Lowest Message Priority
- .
- .
- .
- 11111 = Highest Message Priority

bit 15-11 **Unimplemented:** Read as '0'

Note 1: These bits can only be modified in Configuration mode (OPMOD = 100).
2: This bit is updated when a message completes (or aborts) or when the FIFO is reset.
3: FRESET is set while in Configuration mode and is automatically cleared in Normal mode.

 © 2020 Microchip Technology Inc.

REGISTER 31-17: CFD2FIFOCONm: FIFO CONTROL REGISTER m, (m = 1 to 15) (CONTINUED)

bit 10 **FRESET**: FIFO Reset bit(3)
1 = FIFO is reset when the bit is set and cleared by hardware when FIFO is reset. User should poll whether this bit is clear, before taking any action.
0 = No effect

bit 9 **TXREQ**: Message Send Request bit(2)
TXEN = 1 (FIFO configured as a Transmit FIFO)
1 = Requests sending a message; the bit is automatically cleared when all the messages queued in the FIFO are successfully sent
0 = Clearing the bit to '0' while set ('1') requests a message abort
TXEN = 0 (FIFO configured as a Receive FIFO)
This bit has no effect.

bit 8 **UINC**: Increment Head / Tail bit
TXEN = 1 (FIFO configured as a Transmit FIFO)
When this bit is set, the FIFO head increments by a single message
TXEN = 0 (FIFO configured as a Receive FIFO)
When this bit is set, the FIFO tail increments by a single message

bit 7 **TXEN**: TX/RX Buffer Selection bit(1)
1 = Transmit Message Object
0 = Receive Message Object

bit 6 **RTREN**: Auto RTR Enable bit
1 = When a remote transmit is received, TXREQ is set
0 = When a remote transmit is received, TXREQ is unaffected

bit 5 **RXTSEN**: Received Message Time Stamp Enable bit(1)
1 = Capture time stamp in received message object in RAM
0 = Capture time stamp is not captured

Note: Change only in Configuration mode, since it is used for address calculation.

bit 4 **TXATIE**: Transmit Attempts Exhausted Interrupt Enable bit
1 = Enable interrupt
0 = Disable interrupt

bit 3 **RXOVIE**: Overflow Interrupt Enable bit
1 = Interrupt enabled for overflow event
0 = Interrupt disabled for overflow event

bit 2 **TFERFFIE**: Transmit/Receive FIFO Empty/Full Interrupt Enable bit
TXEN = 1 (FIFO configured as a Transmit FIFO)
Transmit FIFO Empty Interrupt Enable
1 = Interrupt enabled for FIFO empty
0 = Interrupt disabled for FIFO empty
TXEN = 0 (FIFO configured as a Receive FIFO)
Receive FIFO Full Interrupt Enable
1 = Interrupt enabled for FIFO full
0 = Interrupt disabled for FIFO full

bit 1 **TFHRFHIE**: Transmit/Receive FIFO Half Empty/Half Full Interrupt Enable bit
TXEN = 1 (FIFO configured as a Transmit FIFO)
Transmit FIFO Half Empty Interrupt Enable
1 = Interrupt enabled for FIFO half empty
0 = Interrupt disabled for FIFO half empty
TXEN = 0 (FIFO configured as a Receive FIFO)
Receive FIFO Half Full Interrupt Enable
1 = Interrupt enabled for FIFO half full
0 = Interrupt disabled for FIFO half full

Note 1: These bits can only be modified in Configuration mode (OPMOD = 100).
2: This bit is updated when a message completes (or aborts) or when the FIFO is reset.
3: FRESET is set while in Configuration mode and is automatically cleared in Normal mode.

REGISTER 31-17: CFD2FIFOCONm: FIFO CONTROL REGISTER m, (m = 1 to 15) (CONTINUED)

bit 0 **TFNRFNIE**: Transmit/Receive FIFO Not Full/Not Empty Interrupt Enable bit
TXEN = 1 (FIFO configured as a Transmit FIFO)
Transmit FIFO Not Full Interrupt Enable
1 = Interrupt enabled for FIFO not full
0 = Interrupt disabled for FIFO not full
TXEN = 0 (FIFO configured as a Receive FIFO)
Receive FIFO Not Empty Interrupt Enable
1 = Interrupt enabled for FIFO not empty
0 = Interrupt disabled for FIFO not empty

Note 1: These bits can only be modified in Configuration mode (OPMOD = 100).
2: This bit is updated when a message completes (or aborts) or when the FIFO is reset.
3: FRESET is set while in Configuration mode and is automatically cleared in Normal mode.

 © 2020 Microchip Technology Inc.

REGISTER 31-18: CFD2FIFOSTAm: FIFO STATUS REGISTER m, (m = 1 to 15)

Bit Range	Bit 31/23/15/7	Bit 30/22/14/6	Bit 29/21/13/5	Bit 28/20/12/4	Bit 27/19/11/3	Bit 26/18/10/2	Bit 25/17/9/1	Bit 24/16/8/0
31:24	U-0	U-0	U-0	U-0	U-0	U-0	U-0	U-0
	—	—	—	—	—	—	—	—
23:16	U-0	U-0	U-0	U-0	U-0	U-0	U-0	U-0
	—	—	—	—	—	—	—	—
15:8	U-0	U-0	U-0	R-0	R-0	R-0	R-0	R-0
	—	—	—	FIFOC<4:0>(1)				
7:0	R-0	R-0	R-0	HS/C-0	HS/C-0	R-0	R-0	R-0
	TXABT(3,2)	TXLARB(3,2)	TXERR(3,2)	TXATIF	RXOVIF	TFERFFIF	TFHRFHIF	TFNRFNIF

Legend:			
R = Readable bit	W = Writable bit	U = Unimplemented bit, read as '0'	
S = Settable bit	C = Clearable bit	x = Bit is unknown at Reset	
'1' = Bit is set at Reset	'0' = Bit is cleared at Reset	HC = Hardware clear	HS = Set by Hardware only

bit 31-13 **Unimplemented:** Read as '0'

bit 4-0 **FIFOCI<4:0>**: FIFO Message Index bits
TXEN = 1 (FIFO configured as a Transmit Buffer)
A read of this register returns an index to the message that the FIFO attempts to transmit next.
TXEN = 0 (FIFO configured as a Receive Buffer)
A read of this register returns an index to the message that the FIFO uses to save the next message.

bit 7 **TXABT**: Message Aborted Status bit
1 = Message is aborted
0 = Message completed successfully

bit 6 **TXLARB**: Message Lost Arbitration Status bit
1 = Message lost arbitration while being sent
0 = Message does not loose arbitration while being sent

bit 5 **TXERR**: Error Detected During Transmission bit
1 = A bus error occurs while the message is being sent
0 = A bus error does not occur while the message is being sent

bit 4 **TXATIF**: Transmit Attempts Exhausted Interrupt Pending bit
TXEN = 1 (FIFO configured as a Transmit Buffer)
1 = Interrupt is pending
0 = Interrupt is not pending
TXEN = 0 (FIFO configured as a Receive Buffer)
Unused, reads '0'

bit 3 **RXOVIF**: Receive FIFO Overflow Interrupt Flag bit
TXEN = 1 (FIFO configured as a Transmit Buffer)
Unused, reads '0'
TXEN = 0 (FIFO configured as a Receive Buffer)
1 = Overflow event has occurred
0 = No overflow event occurred

Note 1: FIFOCI<4:0> gives a zero-indexed value to the message in the FIFO. If the FIFO is 4 messages deep (FSIZE=5'h03) FIFOCI will take on a value of 0 to 3 depending on the state of the FIFO.
2: This bit is reset on any read of this register or when the TXQ is reset.
3: This bit is updated when a message completes (or aborts) or when the FIFO is reset.

REGISTER 31-18: CFD2FIFOSTAm: FIFO STATUS REGISTER m, (m = 1 to 15) (CONTINUED)

bit 2 **TFERFFIF**: Transmit/Receive FIFO Empty/Full Interrupt Flag bit
TXEN = 1 (FIFO configured as a Transmit FIFO)
Transmit FIFO Empty Interrupt Flag
1 = FIFO is empty
0 = FIFO is not empty, at least 1 message queued to be transmitted
TXEN = 0 (FIFO configured as a Receive FIFO)
Receive FIFO Full Interrupt Flag
1 = FIFO is full
0 = FIFO is not full

bit 1 **TFHRFHIF**: Transmit/Receive FIFO Half Empty/Half Full Interrupt Flag bit
TXEN = 1 (FIFO configured as a Transmit FIFO)
Transmit FIFO Half Empty Interrupt Flag
1 = FIFO is <= half full
0 = FIFO is > half full
TXEN=0 (FIFO configured as a Receive FIFO)
Receive FIFO Half Full Interrupt Flag
1 = FIFO is >= half full
0 = FIFO is < half full

bit 0 **TFNRFNIF**: Transmit/Receive FIFO Not Full/Not Empty Interrupt Flag bit
TXEN = 1 (FIFO configured as a Transmit FIFO)
Transmit FIFO Not Full Interrupt Flag
1 = FIFO is not full
0 = FIFO is full
TXEN = 0 (FIFO configured as a Receive FIFO)
Receive FIFO Not Empty Interrupt Flag
1 = FIFO is not empty, has at least 1 message
0 = FIFO is empty

Note 1: FIFOCI<4:0> gives a zero-indexed value to the message in the FIFO. If the FIFO is 4 messages deep (FSIZE=5'h03) FIFOCI will take on a value of 0 to 3 depending on the state of the FIFO.
2: This bit is reset on any read of this register or when the TXQ is reset.
3: This bit is updated when a message completes (or aborts) or when the FIFO is reset.

 © 2020 Microchip Technology Inc.

REGISTER 31-19: CFD2TEFCON: TRANSMIT EVENT FIFO CONTROL REGISTER

Bit Range	Bit 31/23/15/7	Bit 30/22/14/6	Bit 29/21/13/5	Bit 28/20/12/4	Bit 27/19/11/3	Bit 26/18/10/2	Bit 25/17/9/1	Bit 24/16/8/0
31:24	U-0	U-0	U-0	R/W-0	R/W-0	R/W-0	R/W-0	R/W-0
	—	—	—	FSIZE<4:0>(1)				
23:16	U-0	U-0	U-0	U-0	U-0	U-0	U-0	U-0
	—	—	—	—	—	—	—	—
15:8	U-0	U-0	U-0	U-0	U-0	S/HC-1	U-0	S/HC-0
	—	—	—	—	—	FRESET	—	UINC
7:0	U-0	U-0	R/W-0	U-0	R/W-0	R/W-0	R/W-0	R/W-0
	—	—	TEFTSEN(1)	—	TEFOVIE	TEFFIE	TEFHIE	TEFNEIE

Legend:			
R = Readable bit	W = Writable bit	U = Unimplemented bit, read as '0'	
S = Settable bit	C = Clearable bit	x = Bit is unknown at Reset	
'1' = Bit is set at Reset	'0' = Bit is cleared at Reset	HC = Hardware clear	HS = Set by Hardware only

bit 31-29 **Unimplemented:** Read as '0'

bit 28-24 **FSIZE<4:0>**: FIFO Size bits(1)
0_0000 = FIFO is 1 message deep
0_0001 = FIFO is 2 messages deep
0_0002 = FIFO is 3 messages deep
.
.
.
1_1111 = FIFO is 32 messages deep

bit 23-11 **Unimplemented:** Read as '0'

bit 10 **FRESET**: FIFO Reset bit
1 = FIFO is reset when the bit is set and cleared by hardware. The user should poll this bit is clear before taking any action.
0 = No effect

bit 9 **Unimplemented:** Read as '0'

bit 8 **UINC**: Increment Tail bit
When this bit is set, the FIFO tail increments by a single message.

bit 7-6 **Unimplemented:** Read as '0'

bit 5 **TEFTSEN**: Transmit Event FIFO Time Stamp Enable bit(1)
1 = Time stamp elements in TEF
0 = Don't time stamp elements in TEF

bit 4 **Unimplemented:** Read as '0'

bit 3 **TEFOVIE**: Transmit Event FIFO Overflow Interrupt Enable bit
1 = Interrupt enabled for overflow event
0 = Interrupt disabled for overflow event

bit 2 **TEFFIE**: Transmit Event FIFO Full Interrupt Enable bit
1 = Interrupt enabled for FIFO full
0 = Interrupt disabled for FIFO full

bit 1 **TEFHIE**: Transmit Event FIFO Half Full Interrupt Enable bit
1 = Interrupt enabled for FIFO half full
0 = Interrupt disabled for FIFO half full

bit 0 **TEFNEIE**: Transmit Event FIFO Not Empty Interrupt Enable bit
1 = Interrupt enabled for FIFO not empty
0 = Interrupt disabled for FIFO not empty

Note 1: CFD2TEFCON: These bits can only be modified in Configuration Mode (OPMOD = 100).

REGISTER 31-20: CFD2TEFSTA: TRANSMIT EVENT FIFO STATUS REGISTER

Bit Range	Bit 31/23/15/7	Bit 30/22/14/6	Bit 29/21/13/5	Bit 28/20/12/4	Bit 27/19/11/3	Bit 26/18/10/2	Bit 25/17/9/1	Bit 24/16/8/0
31:24	U-0	U-0	U-0	U-0	U-0	U-0	U-0	U-0
	—	—	—	—	—	—	—	—
23:16	U-0	U-0	U-0	U-0	U-0	U-0	U-0	U-0
	—	—	—	—	—	—	—	—
15:8	U-0	U-0	U-0	U-0	U-0	U-0	U-0	U-0
	—	—	—	—	—	—	—	—
7:0	U-0	U-0	U-0	U-0	HS/HC/C-0	R-0	R-0	R-0
	—	—	—	—	TEFOVIF(2)	TEFFIF(1)	TEFHIF(1)	TEFNEIF(1)

Legend:			
R = Readable bit	W = Writable bit	U = Unimplemented bit, read as '0'	
S = Settable bit	C = Clearable bit	x = Bit is unknown at Reset	
'1' = Bit is set at Reset	'0' = Bit is cleared at Reset	HC = Hardware clear	HS = Set by Hardware only

bit 31-4 **Unimplemented:** Read as '0'

bit 3 **TEFOVIF**: Transmit Event FIFO Overflow Interrupt Flag bit(2)
1 = Overflow event has occurred
0 = No overflow event occurred

bit 2 **TEFFIF**: Transmit Event FIFO Full Interrupt Flag bit(1)
1 = FIFO is full
0 = FIFO is not full

bit 1 **TEFHIF**: Transmit Event FIFO Half Full Interrupt Flag bit(1)
1 = FIFO is >= half full
0 = FIFO is < half full

bit 0 **TEFNEIF**: Transmit Event FIFO Not Empty Interrupt Flag bit(1)
1 = FIFO is not empty, has at least 1 message
0 = FIFO is empty

Note 1: CFD2TEFSTA: This bit is read only and reflects the status of the FIFO.
2: TEFOVIF bit is cleared by FIFO Reset.

 © 2020 Microchip Technology Inc.

REGISTER 31-21: CFD2FIFOUAm: FIFO USER ADDRESS REGISTER m, (m = 1 to 15)

Bit Range	Bit 31/23/15/7	Bit 30/22/14/6	Bit 29/21/13/5	Bit 28/20/12/4	Bit 27/19/11/3	Bit 26/18/10/2	Bit 25/17/9/1	Bit 24/16/8/0
31:24	R-x	R-x	R-x	R-x	R-x	R-x	R-x	R-x
	FIFOUA(1)<31:24>							
23:16	R-x	R-x	R-x	R-x	R-x	R-x	R-x	R-x
	FIFOUA(1)<23:16>							
15:8	R-x	R-x	R-x	R-x	R-x	R-x	R-x	R-x
	FIFOUA(1)<15:12>				FIFOUA(1)<11:8>			
7:0	R-x	R-x	R-x	R-x	R-x	R-x	R-x	R-x
	FIFOUA(1)<7:0>							

Legend:			
R = Readable bit	W = Writable bit	U = Unimplemented bit, read as '0'	
S = Settable bit	C = Clearable bit	x = Bit is unknown at Reset	
'1' = Bit is set at Reset	'0' = Bit is cleared at Reset	HC = Hardware clear	HS = Set by Hardware only

bit 31-0 **FIFOUA<31:0>**: FIFO User Address bits(1)
TXEN= 1 (FIFO configured as a Transmit Buffer)
A read of this register returns the address where the next message is to be written (FIFO head).
TXEN= 0 (FIFO configured as a Receive Buffer)
A read of this register returns the address where the next message is to be read (FIFO tail).

Note 1: This register is not guaranteed to read correctly in Configuration mode and should only be accessed when the module is not in Configuration mode.

REGISTER 31-22: CFD2TEFUA: TRANSMIT EVENT FIFO USER ADDRESS REGISTER

Bit Range	Bit 31/23/15/7	Bit 30/22/14/6	Bit 29/21/13/5	Bit 28/20/12/4	Bit 27/19/11/3	Bit 26/18/10/2	Bit 25/17/9/1	Bit 24/16/8/0
31:24	R-x	R-x	R-x	R-x	R-x	R-x	R-x	R-x
	TEFUA(1)<31:24>							
23:16	R-x	R-x	R-x	R-x	R-x	R-x	R-x	R-x
	TEFUA(1)<23:16>							
15:8	R-x	R-x	R-x	R-x	R-x	R-x	R-x	R-x
	TEFUA(1)<15:12>				TEFUA(1)<11:8>			
7:0	R-x	R-x	R-x	R-x	R-x	R-x	R-x	R-x
	TEFUA(1)<7:0>							

Legend:			
R = Readable bit	W = Writable bit	U = Unimplemented bit, read as '0'	
S = Settable bit	C = Clearable bit	x = Bit is unknown at Reset	
'1' = Bit is set at Reset	'0' = Bit is cleared at Reset	HC = Hardware clear	HS = Set by Hardware only

bit 31-0 **TEFUA<31:0>**: Transmit Event FIFO User Address bits(1)
A read of this register returns the address where the next event is to be read (FIFO tail).

Note 1: This register is not guaranteed to read correctly in Configuration mode and should only be accessed when the module is not in Configuration mode.

 © 2020 Microchip Technology Inc.

REGISTER 31-23: CFD2TXQUA: TRANSMIT QUEUE USER ADDRESS REGISTER

Bit Range	Bit 31/23/15/7	Bit 30/22/14/6	Bit 29/21/13/5	Bit 28/20/12/4	Bit 27/19/11/3	Bit 26/18/10/2	Bit 25/17/9/1	Bit 24/16/8/0
31:24	R-x	R-x	R-x	R-x	R-x	R-x	R-x	R-x
	TXQUA(1)<31:24>							
23:16	R-x	R-x	R-x	R-x	R-x	R-x	R-x	R-x
	TXQUA(1)<23:16>							
15:8	R-x	R-x	R-x	R-x	R-x	R-x	R-x	R-x
	TXQUA(1)<15:12>				TXQUA(1)<11:8>			
7:0	R-x	R-x	R-x	R-x	R-x	R-x	R-x	R-x
	TXQUA(1)<7:0>							

Legend:			
R = Readable bit	W = Writable bit	U = Unimplemented bit, read as '0'	
S = Settable bit	C = Clearable bit	x = Bit is unknown at Reset	
'1' = Bit is set at Reset	'0' = Bit is cleared at Reset	HC = Hardware clear	HS = Set by Hardware only

bit 31-0 **TXQUA<31:0>**: TXQ User Address bits(1)
A read of this register returns the address where the next message is to be written (TXQ head).

Note 1: This register is not guaranteed to read correctly in Configuration mode and should only be accessed when the module is not in Configuration mode.

REGISTER 31-24: CFD2TREC: TRANSMIT/RECEIVE ERROR COUNT REGISTER

Bit Range	Bit 31/23/15/7	Bit 30/22/14/6	Bit 29/21/13/5	Bit 28/20/12/4	Bit 27/19/11/3	Bit 26/18/10/2	Bit 25/17/9/1	Bit 24/16/8/0
31:24	U-0	U-0	U-0	U-0	U-0	U-0	U-0	U-0
	—	—	—	—	—	—	—	—
23:16	U-0	U-0	R-1	R-0	R-0	R-0	R-0	R-0
	—	—	TXBO	TXBP	RXBP	TXWARN	RXWARN	EWARN
15:8	R-0	R-0	R-0	R-0	R-0	R-0	R-0	R-0
	TERRCNT<7:0>							
7:0	R-0	R-0	R-0	R-0	R-0	R-0	R-0	R-0
	RERRCNT<7:0>							

Legend:			
R = Readable bit	W = Writable bit	U = Unimplemented bit, read as '0'	
S = Settable bit	C = Clearable bit	x = Bit is unknown at Reset	
'1' = Bit is set at Reset	'0' = Bit is cleared at Reset	HC = Hardware clear	HS = Set by Hardware only

bit 31-22 **Unimplemented:** Read as '0'

bit 21 **TXBO**: Transmitter in Error State Bus Off bit (TERRCNT > 255)
In Configuration mode, TXBO is set, since the module is not on the bus.

bit 20 **TXBP**: Transmitter in Error State Bus Passive bit (TERRCNT > 127)

bit 19 **RXBP**: Receiver in Error State Bus Passive bit (RERRCNT > 127)

bit 18 **TXWARN**: Transmitter in Error State Warning bit (128 > TERRCNT > 95)

bit 17 **RXWARN**: Receiver in Error State Warning bit (128 > RERRCNT > 95)

bit 16 **EWARN**: Transmitter or Receiver is in Error State Warning bit

bit 15-8 **TERRCNT<7:0>**: Transmit Error Counter bits

bit 7-0 **RERRCNT<7:0>**: Receive Error Counter bits

 © 2020 Microchip Technology Inc.

REGISTER 31-25: CFD2BDIAG0: BUS DIAGNOSTICS REGISTER 0

Bit Range	Bit 31/23/15/7	Bit 30/22/14/6	Bit 29/21/13/5	Bit 28/20/12/4	Bit 27/19/11/3	Bit 26/18/10/2	Bit 25/17/9/1	Bit 24/16/8/0
31:24	R/W-0	R/W-0	R/W-0	R/W-0	R/W-0	R/W-0	R/W-0	R/W-0
	DTERRCNT<7:0>							
23:16	R/W-0	R/W-0	R/W-0	R/W-0	R/W-0	R/W-0	R/W-0	R/W-0
	DRERRCNT<7:0>							
15:8	R/W-0	R/W-0	R/W-0	R/W-0	R/W-0	R/W-0	R/W-0	R/W-0
	NTERRCNT<7:0>							
7:0	R/W-0	R/W-0	R/W-0	R/W-0	R/W-0	R/W-0	R/W-0	R/W-0
	NRERRCNT<7:0>							

Legend:			
R = Readable bit	W = Writable bit	U = Unimplemented bit, read as '0'	
S = Settable bit	C = Clearable bit	x = Bit is unknown at Reset	
'1' = Bit is set at Reset	'0' = Bit is cleared at Reset	HC = Hardware clear	HS = Set by Hardware only

bit 31-24 **DTERRCNT<7:0>**: Data Bit Rate Transmit Error Counter bits

bit 23-16 **DRERRCNT<7:0>**: Data Bit Rate Receive Error Counter bits

bit 15-8 **NTERRCNT<7:0>**: Nominal Bit Rate Transmit Error Counter bits

bit 7-0 **NRERRCNT<7:0>**: Nominal Bit Rate Receive Error Counter bits

Note 1: Errors are captured in the nominal error bit register bits when the bits are transmitted with nominal bit rate (In a CAN 2.0 frame or a CAN-FD frame with BRS = 0).

2: Errors are captured in the data phase error bit register bits when the bits are transmitted with data bit rate (In a CAN 2.0 frame or a CAN-FD frame with BRS = 1).

REGISTER 31-26: CFD2BDIAG1: BUS DIAGNOSTICS REGISTER 1

Bit Range	Bit 31/23/15/7	Bit 30/22/14/6	Bit 29/21/13/5	Bit 28/20/12/4	Bit 27/19/11/3	Bit 26/18/10/2	Bit 25/17/9/1	Bit 24/16/8/0
31:24	R/W-0	R/W-0	R/W-0	R/W-0	R/W-0	U-0	R/W-0	R/W-0
	DLCMM	ESI	DCRCERR(2)	DSTUFERR(2)	DFORMERR(2)	—	DBIT1ERR(2)	DBIT0ERR(2)
23:16	R/W-0	U-0	R/W-0	R/W-0	R/W-0	R/W-0	R/W-0	R/W-0
	TXBOERR	—	NCRCERR(1)	NSTUFERR(1)	NFORMERR(1)	NACKERR(1)	NBIT1ERR(1)	NBIT0ERR(1)
15:8	R/W-0	R/W-0	R/W-0	R/W-0	R/W-0	R/W-0	R/W-0	R/W-0
	EFMSGCNT<15:8>							
7:0	R/W-0	R/W-0	R/W-0	R/W-0	R/W-0	R/W-0	R/W-0	R/W-0
	EFMSGCNT<7:0>							

Legend:			
R = Readable bit	W = Writable bit	U = Unimplemented bit, read as '0'	
S = Settable bit	C = Clearable bit	x = Bit is unknown at Reset	
'1' = Bit is set at Reset	'0' = Bit is cleared at Reset	HC = Hardware clear	HS = Set by Hardware only

bit 31 **DLCMM**: DLC Mismatch bit
During a transmission or reception, the specified DLC is larger than the PLSIZE of the FIFO element.

bit 30 **ESI**: ESI flag of a received CAN-FD message is set.

bit 29 **DCRCERR**: The CRC check sum of a received message is incorrect in the data phase. The CRC of an incoming message does not match with the CRC calculated from the received data.(2)

bit 28 **DSTUFERR**: More than 5 equal bits in a sequence have occurred in a part of a received message where this is not allowed.(2)

bit 27 **DFORMERR**: A fixed format part of a received frame has the wrong format.(2)

bit 26 **Unimplemented**: Read as '0'

bit 25 **DBIT1ERR**: During the transmission of a message (with the exception of the arbitration field), the device wanted to send a recessive level (bit of logical value '1'), but the monitored bus value is dominant.(2)

bit 24 **DBIT0ERR**: During the transmission of a message (or acknowledge bit, or active error flag, or overload flag), the device wanted to send a dominant level (data or identifier bit logical value '0'), but the monitored bus value is recessive. During Bus_Off recovery this status is set each time a sequence of 11 recessive bits has been monitored. This enables the CPU to monitor the proceeding of the Bus_Off recovery sequence (indicating the bus is not stuck at dominant or continuously disturbed).(2)

bit 23 **TXBOERR**: Device went to bus-off (and auto-recovered)

bit 22 **Unimplemented**: Read as '0'

bit 21 **NCRCERR**: The CRC check sum of a received message is incorrect. The CRC of an incoming message does not match with the CRC calculated from the received data.(1)

bit 20 **NSTUFERR**: More than 5 equal bits in a sequence have occurred in a part of a received message where this is not allowed.(1)

bit 19 **NFORMERR**: A fixed format part of a received frame has the wrong format.(1)

bit 18 **NACKERR**: Transmitted message is not acknowledged.(1)

bit 17 **NBIT1ERR**: During the transmission of a message (with the exception of the arbitration field), the device wanted to send a recessive level (bit of logical value '1'), but the monitored bus value is dominant.(1)

Note 1: Errors are captured in the nominal error bit register bits when the bits are transmitted with Nominal bit rate (In a CAN 2.0 frame or a CAN-FD frame with BRS = 0).

2: Errors are captured in the data phase error bit register bits when the bits are transmitted with data bit rate (In a CAN 2.0 frame or a CAN-FD frame with BRS = 1).

 © 2020 Microchip Technology Inc.

bit 16 **NBIT0ERR**: During the transmission of a message (or acknowledge bit, or active error flag, or overload flag), the device wanted to send a dominant level (data or identifier bit logical value '0'), but the monitored bus value is recessive. During Bus_Off recovery this status is set each time a sequence of 11 recessive bits has been monitored. This enables the CPU to monitor the proceeding of the Bus_Off recovery sequence (indicating the bus is not stuck at dominant or continuously disturbed).(1)

bit 15-0 **EFMSGCNT<15:0>**: Error Free Message Counter bits

Note 1: Errors are captured in the nominal error bit register bits when the bits are transmitted with Nominal bit rate (In a CAN 2.0 frame or a CAN-FD frame with BRS = 0).

2: Errors are captured in the data phase error bit register bits when the bits are transmitted with data bit rate (In a CAN 2.0 frame or a CAN-FD frame with BRS = 1).

REGISTER 31-27: CFD2FLTCONm: FILTER CONTROL REGISTER m, (m = 0 to 3, n = 0 to 31)

Bit Range	Bit 31/23/15/7	Bit 30/22/14/6	Bit 29/21/13/5	Bit 28/20/12/4	Bit 27/19/11/3	Bit 26/18/10/2	Bit 25/17/9/1	Bit 24/16/8/0
31:24	R/W-0	U-0	U-0	R/W-0	R/W-0	R/W-0	R/W-0	R/W-0
	FLTEN3	—	—	F3BP<4:0>				
23:16	R/W-0	U-0	U-0	R/W-0	R/W-0	R/W-0	R/W-0	R/W-0
	FLTEN2	—	—	F2BP<4:0>				
15:8	R/W-0	U-0	U-0	R/W-0	R/W-0	R/W-0	R/W-0	R/W-0
	FLTEN1	—	—	F1BP<4:0>				
7:0	R/W-0	U-0	U-0	R/W-0	R/W-0	R/W-0	R/W-0	R/W-0
	FLTEN0	—	—	F0BP<4:0>				

Legend:			
R = Readable bit	W = Writable bit	U = Unimplemented bit, read as '0'	
S = Settable bit	C = Clearable bit	x = Bit is unknown at Reset	
'1' = Bit is set at Reset	'0' = Bit is cleared at Reset	HC = Hardware clear	HS = Set by Hardware only

bit 7, 15, 23, 31 **FLTENn**: Enable Filter n to Accept Messages bits
1 = Filter is enabled
0 = Filter is disabled

bit 4-0, 12-8, 20-16, 28-24 **FnBP<4:0>**: Pointer to Object when Filter n hits bits
1_1111 = Message matching filter is stored in Object 31
1_1110 = Message matching filter is stored in Object 30
.
.
.
0_0010 = Message matching filter is stored in Object 2
0_0001 = Message matching filter is stored in Object 1
0_0000 = Reserved. Object 0 is the TX Queue and can't receive messages.

Note 1: CFD2FLTCON: These bits can only be modified if the corresponding filter is disabled (FLTEN = 0).

2: CFD2FLTCON: Maximum value of m is configured using the number of filters module parameter (m = number of filters/4 - 1)

REGISTER 31-28: CFD2FLTOBJm: FILTER OBJECT REGISTER m, (m = 0 to 15)

Bit Range	Bit 31/23/15/7	Bit 30/22/14/6	Bit 29/21/13/5	Bit 28/20/12/4	Bit 27/19/11/3	Bit 26/18/10/2	Bit 25/17/9/1	Bit 24/16/8/0
31:24	U-0	R/W-0	R/W-0	R/W-0	R/W-0	R/W-0	R/W-0	R/W-0
	—	EXIDE	SID11	EID<17:13>				
23:16	R/W-0	R/W-0	R/W-0	R/W-0	R/W-0	R/W-0	R/W-0	R/W-0
	EID<12:5>							
15:8	R/W-0	R/W-0	R/W-0	R/W-0	R/W-0	R/W-0	R/W-0	R/W-0
	EID<4:0>					SID<10:8>		
7:0	R/W-0	R/W-0	R/W-0	R/W-0	R/W-0	R/W-0	R/W-0	R/W-0
	SID<7:0>							

Legend:			
R = Readable bit	W = Writable bit	U = Unimplemented bit, read as '0'	
S = Settable bit	C = Clearable bit	x = Bit is unknown at Reset	
'1' = Bit is set at Reset	'0' = Bit is cleared at Reset	HC = Hardware clear	HS = Set by Hardware only

bit 31 **Unimplemented**: Read as '0'

bit 30 **EXIDE**: Extended Identifier Enable bit
If MIDE = 1:
1 = Match only messages with extended identifier addresses
0 = Match only messages with standard identifier addresses

bit 29 **SID11**: Standard identifier filter bit

bit 28-11 **EID<17:0>**: Extended Identifier filter bits
In DeviceNet mode, these are the filter bits for the first 2 data bytes

bit 10-0 **SID<10:0>**: Standard Identifier filter bits

Note: These registers can only be changed when the filter is disabled (CFD2FLTCON.FLTENm = 0).

 © 2020 Microchip Technology Inc.

REGISTER 31-29: CFD2MASKm: MASK REGISTER m, (m = 0 to 15)

Bit Range	Bit 31/23/15/7	Bit 30/22/14/6	Bit 29/21/13/5	Bit 28/20/12/4	Bit 27/19/11/3	Bit 26/18/10/2	Bit 25/17/9/1	Bit 24/16/8/0
31:24	U-0	R/W-0	R/W-0	R/W-0	R/W-0	R/W-0	R/W-0	R/W-0
	—	MIDE	MSID11	MEID<17:13>				
23:16	R/W-0	R/W-0	R/W-0	R/W-0	R/W-0	R/W-0	R/W-0	R/W-0
	MEID<12:5>							
15:8	R/W-0	R/W-0	R/W-0	R/W-0	R/W-0	R/W-0	R/W-0	R/W-0
	MEID<4:0>					MSID<10:8>		
7:0	R/W-0	R/W-0	R/W-0	R/W-0	R/W-0	R/W-0	R/W-0	R/W-0
	MSID<7:0>							

Legend:			
R = Readable bit	W = Writable bit	U = Unimplemented bit, read as '0'	
S = Settable bit	C = Clearable bit	x = Bit is unknown at Reset	
'1' = Bit is set at Reset	'0' = Bit is cleared at Reset	HC = Hardware clear	HS = Set by Hardware only

bit 31 **Unimplemented**: Read as '0'

bit 30 **MIDE**: Identifier Receive Mode bit
1 = Match only message types (standard or extended address) that correspond to EXIDE bit in filter
0 = Match either standard or extended address message if filters match
(if (Filter SID) = (Message SID) or if (Filter SID/EID) = (Message SID/EID))

bit 29 **MSID11**: Standard Identifier Mask bit

bit 28-11 **MEID<17:0>**: Extended Identifier Mask bits
In DeviceNet mode, these are the mask bits for the first 2 data bytes

bit 10-0 **MSID<10:0>**: Standard Identifier Mask bits

Note: These registers can only be changed when the filter is disabled (CFD2FLTCON.FLTENm = 0).

 © 2020 Microchip Technology Inc.

32.0 WI-FI CONTROLLER

PIC32MZ W1 supports on-chip IEEE 802.11b/g/n compliant Single Input Single Output (SISO) WLAN interface with integrated transceivers. Wireless Local Area Network (WLAN) block comprises of on-chip Base Band Processor (BBP)/MAC and RF transceiver.

Key features of the WLAN sub-system include:

- IEEE 802.11b/g/n 2.4 GHz, single stream (1x1) 20 MHz
- Capability to operate in one of the following modes: SoftAP or STA
- Supports IEEE 802.11 WEP, WPA, WPA2, WPA3 security
- Transmit Power Control (TPC) and regulatory support
- High MAC throughput via hardware accelerated A-MSDU/A-MPDU
- Hardware support for immediate block acknowledgment and Reduced Interframe Spacing (RIFS)
- Baseband implements hardware-based calibration mechanism intended to reduce test time and improve yield

Note: For detailed information on the list of features supported in the software, refer to the Software Release Notes.

32.1 Media Access Control (MAC)

The WLAN MAC subsystem along with software stack executing in PIC32MZ W1 implements the MAC functions in compliance with IEEE 802.11n specifications.

802.11 WLAN MAC hardware is responsible for sharing access of the common wireless medium between different WLAN devices. The design is optimized for best performance by moving memory intensive and time critical functionality to the hardware. Some of the features which are part of the MAC hardware are:

- Access to the channel
- Ensuring data integrity (positive acknowledgment, FCS)
- Support for power management
- Inter frame spacing required between transmission of wireless frames
- Network allocation vector to take care of virtual carrier-sensing mechanism
- Implementation of the time critical back-off timers
- Encryption and decryption using the cipher engine (TKIP/CCMP)
- CCMP and TKIP replay detection
- Fragmentation
- Aggregation/De-aggregation
- Checking for Sequence number and duplicate packet detection
- Control frame generation like Request to Send (RTS), Clear to Send (CTS), acknowledgment

32.2 Baseband Processor (BBP)/PHY

PIC32MZ W1 WLAN PHY is designed to achieve reliable and power-efficient physical layer communication. PIC32MZ W1 IEEE 802.11 PHY supports the following functions:

- Single antenna 1x1 stream in 20 MHz channels.
- Supports IEEE 802.11b DSSS-CCK and IEEE 802.11g OFDM
- 802.11n MCS0-7 in 20 MHz
- Support for both short guard and long guard interval
- IEEE 802.11n mixed mode operation
- Per packet TX power control
- Advanced channel estimation/equalization, automatic gain control, Clear Channel Assessment (CCA), carrier/symbol recovery and frame detection

32.3 RF Transceiver

The radio architecture in PIC32MZ W1 is based on a direct conversion topology employing a fully integrated synthesizer. The receiver has an on-chip LNA, while the transmitter utilizes an on-chip pre-driver for the external PA.

The key RFIC features are:

- Ultra low-power direct conversion architecture
- Fractional-N synthesizer
- Fast power up/down time
- On-chip Power Management Unit (PMU)
- Integrated LNA and diversity feature
- On-chip calibration (TX/RX I/Q phase/amplitude mismatch, LOFT, VCO, filter)
- Fast settling DC offset cancellation
- Receive RF RSSI for better interference handling
- Support for PA pre-distortion

 © 2020 Microchip Technology Inc.

33.0 ETHERNET CONTROLLER

Note: This data sheet summarizes the features of the PIC32MZ W1 family of devices. It is not intended to be a comprehensive reference source. To complement the information in this data sheet, refer to **Section 35. "Ethernet Controller"** (DS60001155) in the *"PIC32 Family Reference Manual"*, which is available from the Microchip web site (www.microchip.com/PIC32).

The Ethernet Controller is a bus master module that interfaces with an off-chip Physical Layer (PHY) to implement a complete Ethernet node in a system.

Key features of the Ethernet Controller include:

- Supports 10/100 Mbps data transfer rates
- Supports full-duplex and half-duplex operation
- Supports RMII PHY interface
- Supports both manual and automatic flow control
- RAM descriptor-based DMA operation for both receive and transmit path
- Fully configurable interrupts
- Configurable receive packet filtering
  - CRC check
  - 64-byte pattern match
  - Broadcast, multicast and unicast packets
  - Magic Packet™
  - 64-bit hash table
  - Runt packet
- Supports packet payload checksum calculation
- Supports various hardware statistics counters
- PIC32MZ W1 can supply reference clock to save crystal cost in PHY

Figure 33-1 illustrates a block diagram of the Ethernet Controller.

FIGURE 33-1: ETHERNET CONTROLLER BLOCK DIAGRAM

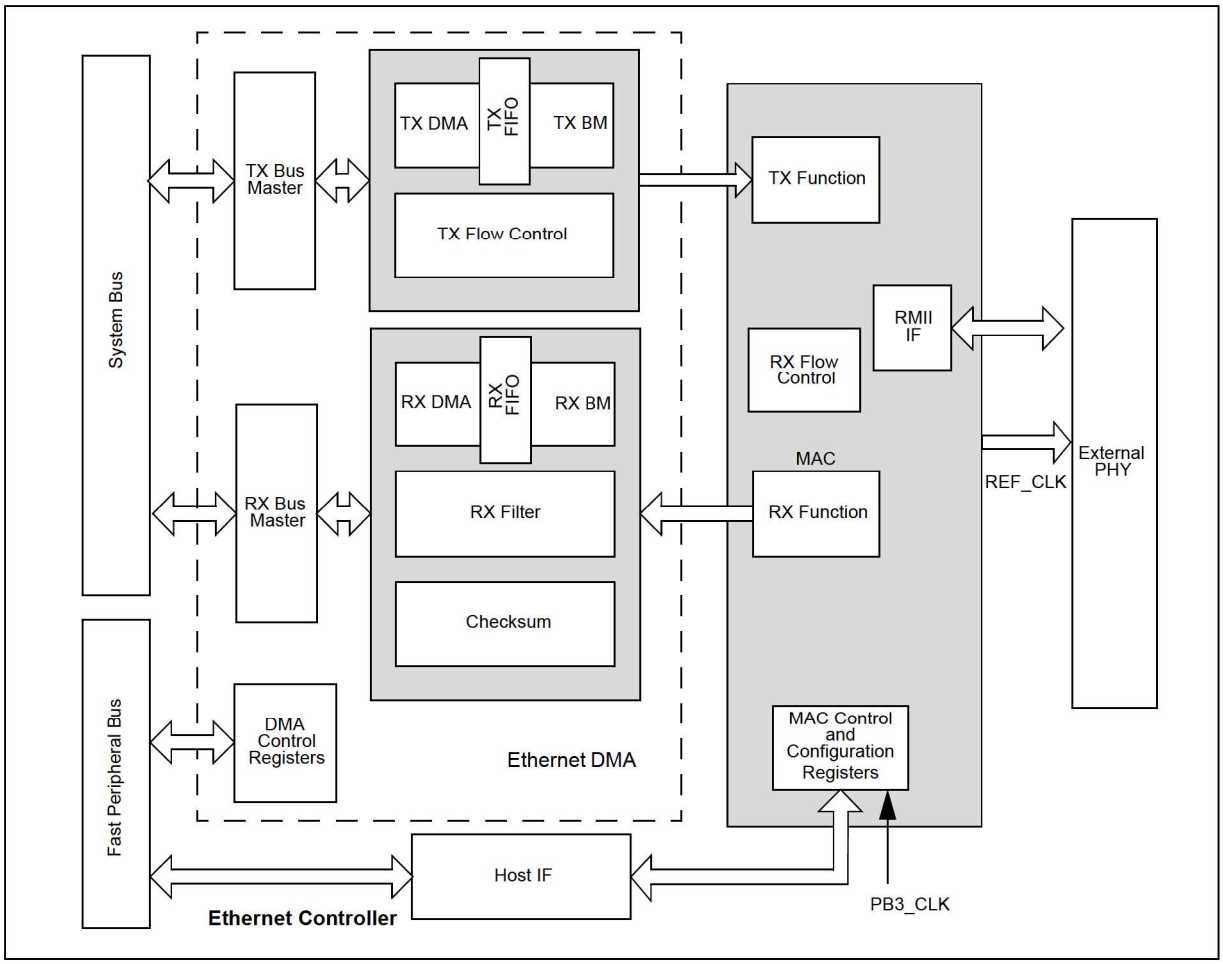

Table 33-1 and Table 33-2 show two interfaces and the associated pins that can be used with the Ethernet Controller.

Note: Ethernet Controller pins that are not used by selected interface can be used by other peripherals.

TABLE 33-1: RMII MODE DEFAULT INTERFACE SIGNALS (FMIIEN = 0, FETHIO = 1)

Pin Name	Description
EMDC	Management Clock
EMDIO	Management I/O
ETXEN	Transmit Enable
ETXD0	Transmit Data
ETXD1	Transmit Data
EREFCLK	Reference Clock
ECRSDV	Carrier Sense – Receive Data Valid
ERXD0	Receive Data
ERXD1	Receive Data
ERXERR	Receive Error

TABLE 33-2: RMII MODE ALTERNATE INTERFACE SIGNALS (FMIIEN = 0, FETHIO = 0)

Pin Name	Description
AEMDC	Management Clock
AEMDIO	Management I/O
AETXEN	Transmit Enable
AETXD0	Transmit Data
AETXD1	Transmit Data
AEREFCLK	Reference Clock
AECRSDV	Carrier Sense – Receive Data Valid
AERXD0	Receive Data
AERXD1	Receive Data
AERXERR	Receive Error

 © 2020 Microchip Technology Inc.

33.1 Ethernet Controller Registers

TABLE 33-3: ETHERNET CONTROLLER REGISTER SUMMARY

Virtual Address (BF84_#)	Register Name(1)	Bit Range	Bits															POR Values
			31/15	30/14	29/13	28/12	27/11	26/10	25/9	24/8	23/7	22/6	21/5	20/4	19/3	18/2	17/1	16/0	
3000	ETHCON1	31:16	PTV<15:0>																0000
		15:0	ON	—	SIDL	—	—	—	TXRTS	RXEN	AUTOFC	—	—	MANFC	—	—	—	BUFCDEC	0000
3010	ETHCON2	31:16	—	—	—	—	—	—	—	—	—	—	—	—	—	—	—	—	0000
		15:0	—	—	—	—	—	RXBUFSZ<6:0>							—	—	—	—	0000
3020	ETHTXST	31:16	TXSTADDR<31:16>																0000
		15:0	TXSTADDR<15:2>														—	—	0000
3030	ETHRXST	31:16	RXSTADDR<31:16>																0000
		15:0	RXSTADDR<15:2>														—	—	0000
3040	ETHHT0	31:16	HT<31:16>																0000
		15:0	HT<15:0>																0000
3050	ETHHT1	31:16	HT<63:48>																0000
		15:0	HT<47:32>																0000
3060	ETHPMM0	31:16	PMM<31:16>																0000
		15:0	PMM<15:0>																0000
3070	ETHPMM1	31:16	PMM<63:48>																0000
		15:0	PMM<47:32>																0000
3080	ETHPMCS	31:16	—	—	—	—	—	—	—	—	—	—	—	—	—	—	—	—	0000
		15:0	PMCS<15:0>																0000
3090	ETHPMO	31:16	—	—	—	—	—	—	—	—	—	—	—	—	—	—	—	—	0000
		15:0	PMO<15:0>																0000
30A0	ETHRXFC	31:16	—	—	—	—	—	—	—	—	—	—	—	—	—	—	—	—	0000
		15:0	HTEN	MPEN	—	NOTPM	PMMODE<3:0>				CRC ERREN	CRC OKEN	RUNT ERREN	RUNTEN	UCEN	NOT MEEN	MCEN	BCEN	0000
30B0	ETHRXWM	31:16	—	—	—	—	—	—	—	—	RXFWM<7:0>								0000
		15:0	—	—	—	—	—	—	—	—	RXEWM<7:0>								0000
30C0	ETHIEN	31:16	—	—	—	—	—	—	—	—	—	—	—	—	—	—	—	—	0000
		15:0	—	TX BUSEIE	RX BUSEIE	—	—	—	EW MARKIE	FW MARKIE	RX DONEIE	PK TPENDIE	RX ACTIE	—	TX DONEIE	TX ABORTIE	RX BUFNAIE	RX OVFLWIE	0000
30D0	ETHIRQ	31:16	—	—	—	—	—	—	—	—	—	—	—	—	—	—	—	—	0000
		15:0	—	TXBUSE	RXBUSE	—	—	—	EWMARK	FWMARK	RXDONE	PKTPEND	RXACT	—	TXDONE	TXABCRT	RXBUFNA	RXOVFLW	0000
30E0	ETHSTAT	31:16	—	—	—	—	—	—	—	—	BUFCNT<7:0>								0000
		15:0	—	—	—	—	—	—	—	—	BUSY	TXBUSY	RXBUSY	—	—	—	—	—	0000
3100	ETH RXOVFLOW	31:16	—	—	—	—	—	—	—	—	—	—	—	—	—	—	—	—	0000
		15:0	RXOVFLWCNT<15:0>																0000

Legend: x = unknown value on Reset; — = unimplemented, read as '0'. Reset values are shown in hexadecimal.

Note 1: All registers in this table (with the exception of ETHSTAT) have corresponding CLR, SET and INV registers at their virtual addresses, plus offsets of 0x4, 0x8 and 0xC, respectively. See **Section 13.3 "CLR, SET, and INV Registers"** for more information.

2: Reset values default to the factory programmed value.

TABLE 33-3: ETHERNET CONTROLLER REGISTER SUMMARY (CONTINUED)

Virtual Address (BF84_#)	Register Name(1)	Bit Range	Bits																POR Values
			31/15	30/14	29/13	28/12	27/11	26/10	25/9	24/8	23/7	22/6	21/5	20/4	19/3	18/2	17/1	16/0	
3110	ETH FRMTXOK	31:16	—	—	—	—	—	—	—	—	—	—	—	—	—	—	—	—	0000
		15:0	FRMTXOKCNT<15:0>																0000
3120	ETH SCOLFRM	31:16	—	—	—	—	—	—	—	—	—	—	—	—	—	—	—	—	0000
		15:0	SCOLFRMCNT<15:0>																0000
3130	ETH MCOLFRM	31:16	—	—	—	—	—	—	—	—	—	—	—	—	—	—	—	—	0000
		15:0	MCOLFRMCNT<15:0>																0000
3140	ETH FRMRXOK	31:16	—	—	—	—	—	—	—	—	—	—	—	—	—	—	—	—	0000
		15:0	FRMRXOKCNT<15:0>																0000
3150	ETH FCSERR	31:16	—	—	—	—	—	—	—	—	—	—	—	—	—	—	—	—	0000
		15:0	FCSERRCNT<15:0>																0000
3160	ETH ALGNERR	31:16	—	—	—	—	—	—	—	—	—	—	—	—	—	—	—	—	0000
		15:0	ALGNERRCNT<15:0>																0000
3200	EMAC1 CFG1	31:16	—	—	—	—	—	—	—	—	—	—	—	—	—	—	—	—	0000
		15:0	SOFT RESET	SIM RESET	—	—	RESET RMCS	RESET RFUN	RESET TMCS	RESET TFUN	—	—	—	LOOPBACK	TXPAUSE	RXPAUSE	PASSALL	RXENABLE	800D
3210	EMAC1 CFG2	31:16	—	—	—	—	—	—	—	—	—	—	—	—	—	—	—	—	0000
		15:0	—	EXCESS DFR	BP NOBKOFF	NOBKOFF	—	—	LONGPRE	PUREPRE	AUTOPAD	VLANPAD	PAD ENABLE	CRC ENABLE	DELAYCRC	HUGEFRM	LENGTHCK	FULLDPLX	40B2
3220	EMAC1 IPGT	31:16	—	—	—	—	—	—	—	—	—	—	—	—	—	—	—	—	0000
		15:0	—	—	—	—	—	—	—	—	—	B2BIPKTGP<6:0>							0012
3230	EMAC1 IPGR	31:16	—	—	—	—	—	—	—	—	—	—	—	—	—	—	—	—	0000
		15:0	—	NB2BIPKTGP1<6:0>							—	NB2BIPKTGP2<6:0>							0C12
3240	EMAC1 CLRT	31:16	—	—	—	—	—	—	—	—	—	—	—	—	—	—	—	—	0000
		15:0	—	—	CWINDOW<5:0>						—	—	—	—	RETX<3:0>				370F
3250	EMAC1 MAXF	31:16	—	—	—	—	—	—	—	—	—	—	—	—	—	—	—	—	0000
		15:0	MACMAXF<15:0>																05EE
3260	EMAC1 SUPP	31:16	—	—	—	—	—	—	—	—	—	—	—	—	—	—	—	—	0000
		15:0	—	—	—	—	RESET RMII	—	—	SPEED RMII	—	—	—	—	—	—	—	—	1000
3270	EMAC1 TEST	31:16	—	—	—	—	—	—	—	—	—	—	—	—	—	—	—	—	0000
		15:0	—	—	—	—	—	—	—	—	—	—	—	—	—	TESTBP	TESTPAUSE	SHRTQNTA	0000
3300	EMAC1 SA0(2)	31:16	—	—	—	—	—	—	—	—	—	—	—	—	—	—	—	—	xxxx
		15:0	STNADDR6<7:0>								STNADDR5<7:0>								xxxx
3310	EMAC1 SA1(2)	31:16	—	—	—	—	—	—	—	—	—	—	—	—	—	—	—	—	xxxx
		15:0	STNADDR4<7:0>								STNADDR3<7:0>								xxxx
3320	EMAC1 SA2(2)	31:16	—	—	—	—	—	—	—	—	—	—	—	—	—	—	—	—	xxxx
		15:0	STNADDR2<7:0>								STNADDR1<7:0>								xxxx

Legend: x = unknown value on Reset; — = unimplemented, read as '0'. Reset values are shown in hexadecimal.

Note 1: All registers in this table (with the exception of ETHSTAT) have corresponding CLR, SET and INV registers at their virtual addresses, plus offsets of 0x4, 0x8 and 0xC, respectively. See **Section 13.3 "CLR, SET, and INV Registers"** for more information.

2: Reset values default to the factory programmed value.

© 2020 Microchip Technology Inc.

REGISTER 33-1: ETHCON1: ETHERNET CONTROLLER CONTROL REGISTER 1

Bit Range	Bit 31/23/15/7	Bit 30/22/14/6	Bit 29/21/13/5	Bit 28/20/12/4	Bit 27/19/11/3	Bit 26/18/10/2	Bit 25/17/9/1	Bit 24/16/8/0
31:24	R/W-0	R/W-0	R/W-0	R/W-0	R/W-0	R/W-0	R/W-0	R/W-0
	PTV<15:8>							
23:16	R/W-0	R/W-0	R/W-0	R/W-0	R/W-0	R/W-0	R/W-0	R/W-0
	PTV<7:0>							
15:8	R/W-0	U-0	R/W-0	U-0	U-0	U-0	R/W-0	R/W-0
	ON	—	SIDL	—	—	—	TXRTS	RXEN(1)
7:0	R/W-0	U-0	U-0	R/W-0	U-0	U-0	U-0	R/W-0
	AUTOFC	—	—	MANFC	—	—	—	BUFCDEC

Legend:			
R = Readable bit	W = Writable bit	U = Unimplemented bit, read as '0'	
-n = Value at POR	'1' = Bit is set	'0' = Bit is cleared	x = Bit is unknown

bit 31-16 **PTV<15:0>:** PAUSE Timer Value bits
PAUSE timer value used for flow control.
This register should only be written when RXEN (ETHCON1<8>) is not set.
These bits are only used for flow control operations.

bit 15 **ON:** Ethernet ON bit
1 = Ethernet module is enabled
0 = Ethernet module is disabled

bit 14 **Unimplemented:** Read as '0'

bit 13 **SIDL:** Ethernet Stop in Idle Mode bit
1 = Ethernet module transfers are paused during Idle mode
0 = Ethernet module transfers continue during Idle mode

bit 12-10 **Unimplemented:** Read as '0'

bit 9 **TXRTS:** Transmit Request to Send bit
1 = Activate the TX logic and send the packet(s) defined in the TX Ethernet Descriptor Table (EDT)
0 = Stop transmit (when cleared by software) or transmit done (when cleared by hardware)

After the bit is written with a '1', it clears to a '0' whenever the transmit logic has finished transmitting the requested packets in the EDT. If a '0' is written by the CPU, the transmit logic finishes the current packet's transmission and then stops any further.
This bit only affects TX operations.

bit 8 **RXEN:** Receive Enable bit(1)
1 = Enable RX logic, packets are received and stored in the RX buffer as controlled by the filter configuration
0 = Disable RX logic, no packets are received in the RX buffer

This bit only affects RX operations.

bit 7 **AUTOFC:** Automatic Flow Control bit
1 = Automatic flow control is enabled
0 = Automatic flow control is disabled

Setting this bit enables automatic flow control. If set, the full and empty watermarks are used to automatically enable and disable the flow control, respectively. When the number of received buffers BUFCNT (ETHSTAT<16:23>) rises to the full watermark, flow control is automatically enabled. When the BUFCNT falls to the empty watermark, flow control is automatically disabled.
This bit is only used for flow control operations and affects both TX and RX operations.

bit 6-5 **Unimplemented:** Read as '0'

Note 1: It is not recommended to clear the RXEN bit and then make changes to any RX related field/register. The Ethernet Controller must be reinitialized (ON cleared to '0'), and then the RX changes applied.

REGISTER 33-1: ETHCON1: ETHERNET CONTROLLER CONTROL REGISTER 1 (CONTINUED)

bit 4 **MANFC:** Manual Flow Control bit

1 = Manual flow control is enabled
0 = Manual flow control is disabled

Setting this bit enables manual flow control. If set, the flow control logic sends a PAUSE frame using the PAUSE timer value in the PTV register. It then resends a PAUSE frame every 128 * PTV<15:0>/2 TX clock cycles until the bit is cleared.

Note: For 10 Mbps operation, TX clock runs at 2.5 MHz. For 100 Mbps operation, TX clock runs at 25 MHz.

When this bit is cleared, the flow control logic automatically sends a PAUSE frame with a 0x0000 PAUSE timer value to disable flow control.
This bit is only used for flow control operations and affects both TX and RX operations.

bit 3-1 **Unimplemented:** Read as '0'

bit 0 **BUFCDEC:** Descriptor Buffer Count Decrement bit

The BUFCDEC bit is a write-1 bit that reads as '0'. When written with a '1', the BUFCNT decrements by one. If BUFCNT is incremented by the RX logic at the same time that this bit is written, the BUFCNT value remains unchanged. Writing a '0' does not have any effect.
This bit is only used for RX operations.

Note 1: It is not recommended to clear the RXEN bit and then make changes to any RX related field/register. The Ethernet Controller must be reinitialized (ON cleared to '0'), and then the RX changes applied.

 © 2020 Microchip Technology Inc.

REGISTER 33-2: ETHCON2: ETHERNET CONTROLLER CONTROL REGISTER 2

Bit Range	Bit 31/23/15/7	Bit 30/22/14/6	Bit 29/21/13/5	Bit 28/20/12/4	Bit 27/19/11/3	Bit 26/18/10/2	Bit 25/17/9/1	Bit 24/16/8/0
31:24	U-0	U-0	U-0	U-0	U-0	U-0	U-0	U-0
	—	—	—	—	—	—	—	—
23:16	U-0	U-0	U-0	U-0	U-0	U-0	U-0	U-0
	—	—	—	—	—	—	—	—
15:8	U-0	U-0	U-0	U-0	U-0	R/W-0	R/W-0	R/W-0
	—	—	—	—	—	RXBUFSZ<6:4>		
7:0	R/W-0	R/W-0	R/W-0	R/W-0	U-0	U-0	U-0	U-0
	RXBUFSZ<3:0>				—	—	—	—

Legend:			
R = Readable bit	W = Writable bit	U = Unimplemented bit, read as '0'	
-n = Value at POR	'1' = Bit is set	'0' = Bit is cleared	x = Bit is unknown

bit 31-11 **Unimplemented:** Read as '0'

bit 10-4 **RXBUFSZ<6:0>:** RX Data Buffer Size for All RX Descriptors (in 16-byte increments) bits

1111111 = RX data buffer size for descriptors is 2032 bytes
•
•
•
1100000 = RX data buffer size for descriptors is 1536 bytes
•
•
•
0000011 = RX data buffer size for descriptors is 48 bytes
0000010 = RX data buffer size for descriptors is 32 bytes
0000001 = RX data buffer size for descriptors is 16 bytes
0000000 = Reserved

bit 3-0 **Unimplemented:** Read as '0'

Note 1: This register is only used for RX operations.

2: The bits in this register may only be changed while the RXEN bit (ETHCON1<8>) = 0.

REGISTER 33-3: ETHTXST: ETHERNET CONTROLLER TX PACKET DESCRIPTOR START ADDRESS REGISTER

Bit Range	Bit 31/23/15/7	Bit 30/22/14/6	Bit 29/21/13/5	Bit 28/20/12/4	Bit 27/19/11/3	Bit 26/18/10/2	Bit 25/17/9/1	Bit 24/16/8/0
31:24	R/W-0	R/W-0	R/W-0	R/W-0	R/W-0	R/W-0	R/W-0	R/W-0
	TXSTADDR<31:24>							
23:16	R/W-0	R/W-0	R/W-0	R/W-0	R/W-0	R/W-0	R/W-0	R/W-0
	TXSTADDR<23:16>							
15:8	R/W-0	R/W-0	R/W-0	R/W-0	R/W-0	R/W-0	R/W-0	R/W-0
	TXSTADDR<15:8>							
7:0	R/W-0	R/W-0	R/W-0	R/W-0	R/W-0	R/W-0	U-0	U-0
	TXSTADDR<7:2>						—	—

Legend:			
R = Readable bit	W = Writable bit	U = Unimplemented bit, read as '0'	
-n = Value at POR	'1' = Bit is set	'0' = Bit is cleared	x = Bit is unknown

bit 31-2 **TXSTADDR<31:2>:** Starting Address of First Transmit Descriptor bits
This register should not be written while any transmit, receive or DMA operations are in progress. This address must be 4-byte aligned (bits 1-0 must be '00').

bit 1-0 **Unimplemented:** Read as '0'

Note 1: This register is only used for TX operations.
2: This register will be updated by hardware with the last descriptor used by the last successfully transmitted packet.

REGISTER 33-4: ETHRXST: ETHERNET CONTROLLER RX PACKET DESCRIPTOR START ADDRESS REGISTER

Bit Range	Bit 31/23/15/7	Bit 30/22/14/6	Bit 29/21/13/5	Bit 28/20/12/4	Bit 27/19/11/3	Bit 26/18/10/2	Bit 25/17/9/1	Bit 24/16/8/0
31:24	R/W-0	R/W-0	R/W-0	R/W-0	R/W-0	R/W-0	R/W-0	R/W-0
	RXSTADDR<31:24>							
23:16	R/W-0	R/W-0	R/W-0	R/W-0	R/W-0	R/W-0	R/W-0	R/W-0
	RXSTADDR<23:16>							
15:8	R/W-0	R/W-0	R/W-0	R/W-0	R/W-0	R/W-0	R/W-0	R/W-0
	RXSTADDR<15:8>							
7:0	R/W-0	R/W-0	R/W-0	R/W-0	R/W-0	R/W-0	U-0	U-0
	RXSTADDR<7:2>						—	—

Legend:			
R = Readable bit	W = Writable bit	U = Unimplemented bit, read as '0'	
-n = Value at POR	'1' = Bit is set	'0' = Bit is cleared	x = Bit is unknown

bit 31-2 **RXSTADDR<31:2>:** Starting Address of First Receive Descriptor bits
This register should not be written while any transmit, receive or DMA operations are in progress. This address must be 4-byte aligned (bits 1-0 must be '00').

bit 1-0 **Unimplemented:** Read as '0'

Note 1: This register is only used for RX operations.
2: This register will be updated by hardware with the last descriptor used by the last successfully transmitted packet.

 © 2020 Microchip Technology Inc.

REGISTER 33-5: ETHHT0: ETHERNET CONTROLLER HASH TABLE 0 REGISTER

Bit Range	Bit 31/23/15/7	Bit 30/22/14/6	Bit 29/21/13/5	Bit 28/20/12/4	Bit 27/19/11/3	Bit 26/18/10/2	Bit 25/17/9/1	Bit 24/16/8/0
31:24	R/W-0	R/W-0	R/W-0	R/W-0	R/W-0	R/W-0	R/W-0	R/W-0
	HT<31:24>							
23:16	R/W-0	R/W-0	R/W-0	R/W-0	R/W-0	R/W-0	R/W-0	R/W-0
	HT<23:16>							
15:8	R/W-0	R/W-0	R/W-0	R/W-0	R/W-0	R/W-0	R/W-0	R/W-0
	HT<15:8>							
7:0	R/W-0	R/W-0	R/W-0	R/W-0	R/W-0	R/W-0	R/W-0	R/W-0
	HT<7:0>							

Legend:			
R = Readable bit	W = Writable bit	U = Unimplemented bit, read as '0'	
-n = Value at POR	'1' = Bit is set	'0' = Bit is cleared	x = Bit is unknown

bit 31-0 **HT<31:0>:** Hash Table Bytes 0-3 bits

Note 1: This register is only used for RX operations.

2: The bits in this register may only be changed while the RXEN bit (ETHCON1<8>) = 0 or the HTEN bit (ETHRXFC<15>) = 0.

REGISTER 33-6: ETHHT1: ETHERNET CONTROLLER HASH TABLE 1 REGISTER

Bit Range	Bit 31/23/15/7	Bit 30/22/14/6	Bit 29/21/13/5	Bit 28/20/12/4	Bit 27/19/11/3	Bit 26/18/10/2	Bit 25/17/9/1	Bit 24/16/8/0
31:24	R/W-0	R/W-0	R/W-0	R/W-0	R/W-0	R/W-0	R/W-0	R/W-0
	HT<63:56>							
23:16	R/W-0	R/W-0	R/W-0	R/W-0	R/W-0	R/W-0	R/W-0	R/W-0
	HT<55:48>							
15:8	R/W-0	R/W-0	R/W-0	R/W-0	R/W-0	R/W-0	R/W-0	R/W-0
	HT<47:40>							
7:0	R/W-0	R/W-0	R/W-0	R/W-0	R/W-0	R/W-0	R/W-0	R/W-0
	HT<39:32>							

Legend:			
R = Readable bit	W = Writable bit	U = Unimplemented bit, read as '0'	
-n = Value at POR	'1' = Bit is set	'0' = Bit is cleared	x = Bit is unknown

bit 31-0 **HT<63:32>:** Hash Table Bytes 4-7 bits

Note 1: This register is only used for RX operations.

2: The bits in this register may only be changed while the RXEN bit (ETHCON1<8>) = 0 or the HTEN bit (ETHRXFC<15>) = 0.

REGISTER 33-7: ETHPMM0: ETHERNET CONTROLLER PATTERN MATCH MASK 0 REGISTER

Bit Range	Bit 31/23/15/7	Bit 30/22/14/6	Bit 29/21/13/5	Bit 28/20/12/4	Bit 27/19/11/3	Bit 26/18/10/2	Bit 25/17/9/1	Bit 24/16/8/0
31:24	R/W-0	R/W-0	R/W-0	R/W-0	R/W-0	R/W-0	R/W-0	R/W-0
	PMM<31:24>							
23:16	R/W-0	R/W-0	R/W-0	R/W-0	R/W-0	R/W-0	R/W-0	R/W-0
	PMM<23:16>							
15:8	R/W-0	R/W-0	R/W-0	R/W-0	R/W-0	R/W-0	R/W-0	R/W-0
	PMM<15:8>							
7:0	R/W-0	R/W-0	R/W-0	R/W-0	R/W-0	R/W-0	R/W-0	R/W-0
	PMM<7:0>							

Legend:			
R = Readable bit	W = Writable bit	U = Unimplemented bit, read as '0'	
-n = Value at POR	'1' = Bit is set	'0' = Bit is cleared	x = Bit is unknown

bit 31-24 **PMM<31:24>:** Pattern Match Mask 3 bits
bit 23-16 **PMM<23:16>:** Pattern Match Mask 2 bits
bit 15-8 **PMM<15:8>:** Pattern Match Mask 1 bits
bit 7-0 **PMM<7:0>:** Pattern Match Mask 0 bits

Note 1: This register is only used for RX operations.
2: The bits in this register may only be changed while the RXEN bit (ETHCON1<8>) = 0 or the PMMODE bit (ETHRXFC<11:8>) = 0.

REGISTER 33-8: ETHPMM1: ETHERNET CONTROLLER PATTERN MATCH MASK 1 REGISTER

Bit Range	Bit 31/23/15/7	Bit 30/22/14/6	Bit 29/21/13/5	Bit 28/20/12/4	Bit 27/19/11/3	Bit 26/18/10/2	Bit 25/17/9/1	Bit 24/16/8/0
31:24	R/W-0	R/W-0	R/W-0	R/W-0	R/W-0	R/W-0	R/W-0	R/W-0
	PMM<63:56>							
23:16	R/W-0	R/W-0	R/W-0	R/W-0	R/W-0	R/W-0	R/W-0	R/W-0
	PMM<55:48>							
15:8	R/W-0	R/W-0	R/W-0	R/W-0	R/W-0	R/W-0	R/W-0	R/W-0
	PMM<47:40>							
7:0	R/W-0	R/W-0	R/W-0	R/W-0	R/W-0	R/W-0	R/W-0	R/W-0
	PMM<39:32>							

Legend:			
R = Readable bit	W = Writable bit	U = Unimplemented bit, read as '0'	
-n = Value at POR	'1' = Bit is set	'0' = Bit is cleared	x = Bit is unknown

bit 31-24 **PMM<63:56>:** Pattern Match Mask 7 bits
bit 23-16 **PMM<55:48>:** Pattern Match Mask 6 bits
bit 15-8 **PMM<47:40>:** Pattern Match Mask 5 bits
bit 7-0 **PMM<39:32>:** Pattern Match Mask 4 bits

Note 1: This register is only used for RX operations.
2: The bits in this register may only be changed while the RXEN bit (ETHCON1<8>) = 0 or the PMMODE bit (ETHRXFC<11:8>) = 0.

 © 2020 Microchip Technology Inc.

REGISTER 33-9: ETHPMCS: ETHERNET CONTROLLER PATTERN MATCH CHECKSUM REGISTER

Bit Range	Bit 31/23/15/7	Bit 30/22/14/6	Bit 29/21/13/5	Bit 28/20/12/4	Bit 27/19/11/3	Bit 26/18/10/2	Bit 25/17/9/1	Bit 24/16/8/0
31:24	U-0	U-0	U-0	U-0	U-0	U-0	U-0	U-0
	—	—	—	—	—	—	—	—
23:16	U-0	U-0	U-0	U-0	U-0	U-0	U-0	U-0
	—	—	—	—	—	—	—	—
15:8	R/W-0	R/W-0	R/W-0	R/W-0	R/W-0	R/W-0	R/W-0	R/W-0
	PMCS<15:8>							
7:0	R/W-0	R/W-0	R/W-0	R/W-0	R/W-0	R/W-0	R/W-0	R/W-0
	PMCS<7:0>							

Legend:			
R = Readable bit	W = Writable bit	U = Unimplemented bit, read as '0'	
-n = Value at POR	'1' = Bit is set	'0' = Bit is cleared	x = Bit is unknown

bit 31-16 **Unimplemented:** Read as '0'
bit 15-8 **PMCS<15:8>:** Pattern Match Checksum 1 bits
bit 7-0 **PMCS<7:0>:** Pattern Match Checksum 0 bits

Note 1: This register is only used for RX operations.
2: The bits in this register may only be changed while the RXEN bit (ETHCON1<8>) = 0 or the PMMODE bit (ETHRXFC<11:8>) = 0.

REGISTER 33-10: ETHPMO: ETHERNET CONTROLLER PATTERN MATCH OFFSET REGISTER

Bit Range	Bit 31/23/15/7	Bit 30/22/14/6	Bit 29/21/13/5	Bit 28/20/12/4	Bit 27/19/11/3	Bit 26/18/10/2	Bit 25/17/9/1	Bit 24/16/8/0
31:24	U-0	U-0	U-0	U-0	U-0	U-0	U-0	U-0
	—	—	—	—	—	—	—	—
23:16	U-0	U-0	U-0	U-0	U-0	U-0	U-0	U-0
	—	—	—	—	—	—	—	—
15:8	R/W-0	R/W-0	R/W-0	R/W-0	R/W-0	R/W-0	R/W-0	R/W-0
	PMO<15:8>							
7:0	R/W-0	R/W-0	R/W-0	R/W-0	R/W-0	R/W-0	R/W-0	R/W-0
	PMO<7:0>							

Legend:			
R = Readable bit	W = Writable bit	U = Unimplemented bit, read as '0'	
-n = Value at POR	'1' = Bit is set	'0' = Bit is cleared	x = Bit is unknown

bit 31-16 **Unimplemented:** Read as '0'
bit 15-0 **PMO<15:0>:** Pattern Match Offset 1 bits

Note 1: This register is only used for RX operations.
2: The bits in this register may only be changed while the RXEN bit (ETHCON1<8>) = 0 or the PMMODE bit (ETHRXFC<11:8>) = 0.

REGISTER 33-11: ETHRXFC: ETHERNET CONTROLLER RECEIVE FILTER CONFIGURATION REGISTER

Bit Range	Bit 31/23/15/7	Bit 30/22/14/6	Bit 29/21/13/5	Bit 28/20/12/4	Bit 27/19/11/3	Bit 26/18/10/2	Bit 25/17/9/1	Bit 24/16/8/0
31:24	U-0	U-0	U-0	U-0	U-0	U-0	U-0	U-0
	—	—	—	—	—	—	—	—
23:16	U-0	U-0	U-0	U-0	U-0	U-0	U-0	U-0
	—	—	—	—	—	—	—	—
15:8	R/W-0	R/W-0	U-0	R/W-0	R/W-0	R/W-0	R/W-0	R/W-0
	HTEN	MPEN	—	NOTPM	PMMODE<3:0>			
7:0	R/W-0	R/W-0	R/W-0	R/W-0	R/W-0	R/W-0	R/W-0	R/W-0
	CRCERREN	CRCOKEN	RUNTERREN	RUNTEN	UCEN	NOTMEEN	MCEN	BCEN

Legend:			
R = Readable bit	W = Writable bit	U = Unimplemented bit, read as '0'	
-n = Value at POR	'1' = Bit is set	'0' = Bit is cleared	x = Bit is unknown

bit 31-16 **Unimplemented:** Read as '0'

bit 15 **HTEN:** Enable Hash Table Filtering bit
1 = Enable Hash Table Filtering
0 = Disable Hash Table Filtering

bit 14 **MPEN:** Magic Packet Enable bit
1 = Enable magic packet filtering
0 = Disable magic packet filtering

bit 13 **Unimplemented:** Read as '0'

bit 12 **NOTPM:** Pattern Match Inversion bit
1 = Pattern match checksum must not match for a successful pattern match to occur
0 = Pattern match checksum must match for a successful pattern match to occur
This bit determines whether pattern match checksum must match in order for a successful pattern match to occur.

Note 1: XOR = True when either one or the other conditions are true, but not both.
2: This hash table filter match is active regardless of the value of the HTEN bit.
3: This magic packet filter match is active regardless of the value of the MPEN bit.

Note 1: This register is only used for RX operations.
2: The bits in this register may only be changed while the RXEN bit (ETHCON1<8>) = 0.

 © 2020 Microchip Technology Inc.

REGISTER 33-11: ETHRXFC: ETHERNET CONTROLLER RECEIVE FILTER CONFIGURATION REGISTER (CONTINUED)

bit 11-8 **PMMODE<3:0>:** Pattern Match Mode bits
1001 = Pattern match is successful if (NOTPM = 1 XOR Pattern Match Checksum matches) AND (Packet = Magic Packet)(1,3)
1000 = Pattern match is successful if (NO
TPM = 1 XOR Pattern Match Checksum matches) AND (Hash Table Filter match)(1,1)
0111 = Pattern match is successful if (NOTPM = 1 XOR Pattern Match Checksum matches) AND (Destination Address = Broadcast Address)(1)
0110 = Pattern match is successful if (NOTPM = 1 XOR Pattern Match Checksum matches) AND (Destination Address = Broadcast Address)(1)
0101 = Pattern match is successful if (NOTPM = 1 XOR Pattern Match Checksum matches) AND (Destination Address = Unicast Address)(1)
0100 = Pattern match is successful if (NOTPM = 1 XOR Pattern Match Checksum matches) AND (Destination Address = Unicast Address)(1)
0011 = Pattern match is successful if (NOTPM = 1 XOR Pattern Match Checksum matches) AND (Destination Address = Station Address)(1)
0010 = Pattern match is successful if (NOTPM = 1 XOR Pattern Match Checksum matches) AND (Destination Address = Station Address)(1)
0001 = Pattern match is successful if (NOTPM = 1 XOR Pattern Match Checksum matches)(1)
0000 = Pattern Match is disabled; pattern match is always unsuccessful

bit 7 **CRCERREN:** CRC Error Collection Enable bit
1 = The received packet CRC must be invalid for the packet to be accepted
0 = Disable CRC Error Collection filtering
This bit allows the user to collect all packets that have an invalid CRC.

bit 6 **CRCOKEN:** CRC OK Enable bit
1 = The received packet CRC must be valid for the packet to be accepted
0 = Disable CRC filtering
This bit allows the user to reject all packets that have an invalid CRC.

bit 5 **RUNTERREN:** Runt Error Collection Enable bit
1 = The received packet must be a runt packet for the packet to be accepted
0 = Disable Runt Error Collection filtering

This bit allows the user to collect all packets that are runt packets. For this filter, a runt packet is defined as any packet with a size of less than 64 bytes (when CRCOKEN = 0) or any packet with a size of less than 64 bytes that has a valid CRC (when CRCOKEN = 1).

bit 4 **RUNTEN:** Runt Enable bit
1 = The received packet must not be a runt packet for the packet to be accepted
0 = Disable Runt filtering

This bit allows the user to reject all runt packets. For this filter, a runt packet is defined as any packet with a size of less than 64 bytes.

bit 3 **UCEN:** Unicast Enable bit
1 = Enable unicast filtering
0 = Disable unicast filtering

This bit allows the user to accept all unicast packets whose Destination Address matches the Station Address.

Note 1: XOR = True when either one or the other conditions are true, but not both.
2: This hash table filter match is active regardless of the value of the HTEN bit.
3: This magic packet filter match is active regardless of the value of the MPEN bit.

Note 1: This register is only used for RX operations.
2: The bits in this register may only be changed while the RXEN bit (ETHCON1<8>) = 0.

REGISTER 33-11: ETHRXFC: ETHERNET CONTROLLER RECEIVE FILTER CONFIGURATION REGISTER (CONTINUED)

bit 2 **NOTMEEN:** Not Me Unicast Enable bit
1 = Enable not me unicast filtering
0 = Disable not me unicast filtering

This bit allows the user to accept all unicast packets whose destination address does not match the station address.

bit 1 **MCEN:** Multicast Enable bit
1 = Enable multicast filtering
0 = Disable multicast filtering

This bit allows the user to accept all multicast address packets.

bit 0 **BCEN:** Broadcast Enable bit
1 = Enable broadcast filtering
0 = Disable broadcast filtering

This bit allows the user to accept all broadcast address packets.

Note 1: XOR = True when either one or the other conditions are true, but not both.
2: This hash table filter match is active regardless of the value of the HTEN bit.
3: This magic packet filter match is active regardless of the value of the MPEN bit.

Note 1: This register is only used for RX operations.
2: The bits in this register may only be changed while the RXEN bit (ETHCON1<8>) = 0.

 © 2020 Microchip Technology Inc.

REGISTER 33-12: ETHRXWM: ETHERNET CONTROLLER RECEIVE WATERMARKS REGISTER

Bit Range	Bit 31/23/15/7	Bit 30/22/14/6	Bit 29/21/13/5	Bit 28/20/12/4	Bit 27/19/11/3	Bit 26/18/10/2	Bit 25/17/9/1	Bit 24/16/8/0
31:24	U-0	U-0	U-0	U-0	U-0	U-0	U-0	U-0
	—	—	—	—	—	—	—	—
23:16	R/W-0	R/W-0	R/W-0	R/W-0	R/W-0	R/W-0	R/W-0	R/W-0
	RXFWM<7:0>							
15:8	U-0	U-0	U-0	U-0	U-0	U-0	U-0	U-0
	—	—	—	—	—	—	—	—
7:0	R/W-0	R/W-0	R/W-0	R/W-0	R/W-0	R/W-0	R/W-0	R/W-0
	RXEWM<7:0>							

Legend:			
R = Readable bit	W = Writable bit	U = Unimplemented bit, read as '0'	
-n = Value at POR	'1' = Bit is set	'0' = Bit is cleared	x = Bit is unknown

bit 31-24 **Unimplemented:** Read as '0'

bit 23-16 **RXFWM<7:0>:** Receive Full Watermark bits

The software controlled RX buffer full watermark pointer is compared against the RX BUFCNT to determine the Full Watermark condition for the FWMARK interrupt and for enabling flow control when automatic flow control is enabled. The full watermark pointer should always be greater than the empty watermark pointer.

bit 15-8 **Unimplemented:** Read as '0'

bit 7-0 **RXEWM<7:0>:** Receive Empty Watermark bits

The software controlled RX buffer empty watermark pointer is compared against the RX BUFCNT to determine the Empty Watermark condition for the EWMARK interrupt and for disabling flow control when automatic flow control is enabled. The empty watermark pointer should always be less than the full watermark pointer.

Note: This register is only used for RX operations.

REGISTER 33-13: ETHIEN: ETHERNET CONTROLLER INTERRUPT ENABLE REGISTER

Bit Range	Bit 31/23/15/7	Bit 30/22/14/6	Bit 29/21/13/5	Bit 28/20/12/4	Bit 27/19/11/3	Bit 26/18/10/2	Bit 25/17/9/1	Bit 24/16/8/0
31:24	U-0	U-0	U-0	U-0	U-0	U-0	U-0	U-0
	—	—	—	—	—	—	—	—
23:16	U-0	U-0	U-0	U-0	U-0	U-0	U-0	U-0
	—	—	—	—	—	—	—	—
15:8	U-0	R/W-0	R/W-0	U-0	U-0	U-0	R/W-0	R/W-0
	—	TXBUSEIE(1)	RXBUSEIE(2)	—	—	—	EWMARKIE(2)	FWMARKIE(2)
7:0	R/W-0	R/W-0	R/W-0	U-0	R/W-0	R/W-0	R/W-0	R/W-0
	RXDONEIE(2)	PKTPENDIE(2)	RXACTIE(2)	—	TXDONEIE(1)	TXABORTIE(1)	RXBUFNAIE(2)	RXOVFLWIE(2)

Legend:			
R = Readable bit	W = Writable bit	U = Unimplemented bit, read as '0'	
-n = Value at POR	'1' = Bit is set	'0' = Bit is cleared	x = Bit is unknown

bit 31-15 **Unimplemented:** Read as '0'

bit 14 **TXBUSEIE:** Transmit BVCI Bus Error Interrupt Enable bit(1)
- 1 = Enable TXBUS error interrupt
- 0 = Disable TXBUS error interrupt

bit 13 **RXBUSEIE:** Receive BVCI Bus Error Interrupt Enable bit(2)
- 1 = Enable RXBUS error interrupt
- 0 = Disable RXBUS error interrupt

bit 12-10 **Unimplemented:** Read as '0'

bit 9 **EWMARKIE:** Empty Watermark Interrupt Enable bit(2)
- 1 = Enable EWMARK interrupt
- 0 = Disable EWMARK interrupt

bit 8 **FWMARKIE:** Full Watermark Interrupt Enable bit(2)
- 1 = Enable FWMARK interrupt
- 0 = Disable FWMARK interrupt

bit 7 **RXDONEIE:** Receiver Done Interrupt Enable bit(2)
- 1 = Enable RXDONE interrupt
- 0 = Disable RXDONE interrupt

bit 6 **PKTPENDIE:** Packet Pending Interrupt Enable bit(2)
- 1 = Enable PKTPEND interrupt
- 0 = Disable PKTPEND interrupt

bit 5 **RXACTIE:** RX Activity Interrupt Enable bit
- 1 = Enable RXACT interrupt
- 0 = Disable RXACT interrupt

bit 4 **Unimplemented:** Read as '0'

bit 3 **TXDONEIE:** Transmitter Done Interrupt Enable bit(1)
- 1 = Enable TXDONE interrupt
- 0 = Disable TXDONE interrupt

bit 2 **TXABORTIE:** Transmitter Abort Interrupt Enable bit(1)
- 1 = Enable TXABORT interrupt
- 0 = Disable TXABORT interrupt

bit 1 **RXBUFNAIE:** Receive Buffer Not Available Interrupt Enable bit(2)
- 1 = Enable RXBUFNA interrupt
- 0 = Disable RXBUFNA interrupt

bit 0 **RXOVFLWIE:** Receive FIFO Overflow Interrupt Enable bit(2)
- 1 = Enable RXOVFLW interrupt
- 0 = Disable RXOVFLW interrupt

Note 1: This bit is only used for TX operations.
2: This bit is only used for RX operations.

 © 2020 Microchip Technology Inc.

REGISTER 33-14: ETHIRQ: ETHERNET CONTROLLER INTERRUPT REQUEST REGISTER

Bit Range	Bit 31/23/15/7	Bit 30/22/14/6	Bit 29/21/13/5	Bit 28/20/12/4	Bit 27/19/11/3	Bit 26/18/10/2	Bit 25/17/9/1	Bit 24/16/8/0
31:24	U-0	U-0	U-0	U-0	U-0	U-0	U-0	U-0
	—	—	—	—	—	—	—	—
23:16	U-0	U-0	U-0	U-0	U-0	U-0	U-0	U-0
	—	—	—	—	—	—	—	—
15:8	U-0	R/W-0	R/W-0	U-0	U-0	U-0	R/W-0	R/W-0
	—	TXBUSE(1)	RXBUSE(2)	—	—	—	EWMARK(2)	FWMARK(2)
7:0	R/W-0	R/W-0	R/W-0	U-0	R/W-0	R/W-0	R/W-0	R/W-0
	RXDONE(2)	PKTPEND(2)	RXACT(2)	—	TXDONE(1)	TXABORT(1)	RXBUFNA(2)	RXOVFLW(2)

Legend:			
R = Readable bit	W = Writable bit	U = Unimplemented bit, read as '0'	
-n = Value at POR	'1' = Bit is set	'0' = Bit is cleared	x = Bit is unknown

bit 31-15 **Unimplemented:** Read as '0'

bit 14 **TXBUSE:** Transmit BVCI Bus Error Interrupt bit(1)
1 = BVCI bus error has occurred
0 = BVCI bus error has not occurred
This bit is set when the TX DMA encounters a BVCI bus error during a memory access. It is cleared by either a Reset or CPU write of a '1' to the CLR register.

bit 13 **RXBUSE:** Receive BVCI Bus Error Interrupt bit(2)
1 = BVCI bus error has occurred
0 = BVCI bus error has not occurred
This bit is set when the RX DMA encounters a BVCI Bus error during a memory access. It is cleared by either a Reset or CPU write of a '1' to the CLR register.

bit 12-10 **Unimplemented:** Read as '0'

bit 9 **EWMARK:** Empty Watermark Interrupt bit(2)
1 = Empty watermark pointer reached
0 = No interrupt pending
This bit is set when the RX descriptor buffer count is less than or equal to the value in the RXEWM bit (ETHRXWM<0:7>) value. It is cleared by BUFCNT bit (ETHSTAT<16:23>) being incremented by hardware. Writing a '0' or a '1' has no effect.

bit 8 **FWMARK:** Full Watermark Interrupt bit(2)
1 = Full Watermark pointer reached
0 = No interrupt pending
This bit is set when the RX descriptor buffer count is greater than or equal to the value in the RXFWM bit (ETHRXWM<16:23>) field. It is cleared by writing the BUFCDEC (ETHCON1<0>) bit to decrement the BUFCNT counter. Writing a '0' or a '1' has no effect.

Note 1: This bit is only used for TX operations.
2: This bit is are only used for RX operations.
3: It is recommended to use the SET, CLR, or INV registers to set or clear any bit in this register. Setting or clearing any bits in this register should only be done for debug/test purposes.

REGISTER 33-14: ETHIRQ: ETHERNET CONTROLLER INTERRUPT REQUEST REGISTER (CONTINUED)

bit 7 **RXDONE:** Receive Done Interrupt bit(2)
1 = RX packet was successfully received
0 = No interrupt pending
This bit is set whenever an RX packet is successfully received. It is cleared by either a Reset or CPU write of a '1' to the CLR register.

bit 6 **PKTPEND:** Packet Pending Interrupt bit(2)
1 = RX packet pending in memory
0 = RX packet is not pending in memory
This bit is set when the BUFCNT counter has a value other than '0'. It is cleared by either a Reset or by writing the BUFCDEC bit to decrement the BUFCNT counter. Writing a '0' or a '1' has no effect.

bit 5 **RXACT:** Receive Activity Interrupt bit(2)
1 = RX packet data was successfully received
0 = No interrupt pending
This bit is set whenever RX packet data is stored in the RXBM FIFO. It is cleared by either a Reset or CPU write of a '1' to the CLR register.

bit 4 **Unimplemented:** Read as '0'

bit 3 **TXDONE:** Transmit Done Interrupt bit(1)
1 = TX packet was successfully sent
0 = No interrupt pending
This bit is set when the present TX packet completes transmission, and the transmit status vector is loaded into the first descriptor used for the packet. It is cleared by either a Reset or CPU write of a '1' to the CLR register.

bit 2 **TXABORT:** Transmit Abort Condition Interrupt bit(1)
1 = TX Abort condition occurred on the last TX packet
0 = No interrupt pending
This bit is set when the MAC aborts the transmission of a TX packet for one of the following reasons:
- Jumbo TX packet abort
- Underrun abort
- Excessive defer abort
- Late collision abort
- Excessive collisions abort

This bit is cleared by either a Reset or CPU write of a '1' to the CLR register.

bit 1 **RXBUFNA:** Receive Buffer Not Available Interrupt bit(2)
1 = RX BD Not Available condition has occurred
0 = No interrupt pending
This bit is set by a RX BD Overrun condition. It is cleared by either a Reset or a CPU write of a '1' to the CLR register.

bit 0 **RXOVFLW:** Receive FIFO Over Flow Error bit(2)
1 = RX FIFO Overflow Error condition has occurred
0 = No interrupt pending
RXOVFLW is set by the RXBM Logic for an RX FIFO Overflow condition. It is cleared by either a Reset or CPU write of a '1' to the CLR register.

Note 1: This bit is only used for TX operations.
2: This bit is are only used for RX operations.
3: It is recommended to use the SET, CLR, or INV registers to set or clear any bit in this register. Setting or clearing any bits in this register should only be done for debug/test purposes.

 © 2020 Microchip Technology Inc.

REGISTER 33-15: ETHSTAT: ETHERNET CONTROLLER STATUS REGISTER

Bit Range	Bit 31/23/15/7	Bit 30/22/14/6	Bit 29/21/13/5	Bit 28/20/12/4	Bit 27/19/11/3	Bit 26/18/10/2	Bit 25/17/9/1	Bit 24/16/8/0
31:24	U-0	U-0	U-0	U-0	U-0	U-0	U-0	U-0
	—	—	—	—	—	—	—	—
23:16	R/W-0	R/W-0	R/W-0	R/W-0	R/W-0	R/W-0	R/W-0	R/W-0
	BUFCNT<7:0>(1)							
15:8	U-0	U-0	U-0	U-0	U-0	U-0	U-0	U-0
	—	—	—	—	—	—	—	—
7:0	R/W-0	R/W-0	R/W-0	U-0	U-0	U-0	U-0	U-0
	ETHBUSY(5)	TXBUSY(2,6)	RXBUSY(3,6)	—	—	—	—	—

Legend:			
R = Readable bit	W = Writable bit	U = Unimplemented bit, read as '0'	
-n = Value at POR	'1' = Bit is set	'0' = Bit is cleared	x = Bit is unknown

bit 31-24 **Unimplemented:** Read as '0'

bit 23-16 **BUFCNT<7:0>:** Packet Buffer Count bits(1)

Number of packet buffers received in memory. Once a packet has been successfully received, this register is incremented by hardware based on the number of descriptors used by the packet. Software decrements the counter (by writing to the BUFCDEC bit (ETHCON1<0>) for each descriptor used) after a packet has been read out of the buffer. The register does not roll over (0xFF to 0x00) when hardware tries to increment the register and the register is already at 0xFF. Conversely, the register does not roll under (0x00 to 0xFF) when software tries to decrement the register and the register is already at 0x0000. When software attempts to decrement the counter at the same time that the hardware attempts to increment the counter, the counter value remains unchanged.

When this register value reaches 0xFF, the RX logic halts (only if automatic flow control is enabled) awaiting software to write the BUFCDEC bit in order to decrement the register below 0xFF.

If automatic flow control is disabled, the RXDMA continues processing and the BUFCNT saturates at a value of 0xFF.

When this register is non-zero, the PKTPEND status bit is set and an interrupt may be generated, depending on the value of the ETHIEN bit <PKTPENDIE> register.

When the ETHRXST register is written, the BUFCNT counter is automatically cleared to 0x00.

Note: BUFCNT is not cleared when ON is set to '0'. This enables software to continue to utilize and decrement this count.

bit 15-8 **Unimplemented:** Read as '0'

bit 7 **ETHBUSY:** Ethernet Module Busy bit(5)

1 = Ethernet logic turns on (ON (ETHCON1<15>) = 1) or is completing a transaction
0 = Ethernet logic is idle

This bit indicates that the module has been turned on or is completing a transaction after being turned off.

Note 1: This bit is only used for RX operations.
2: This bit is only affected by TX operations.
3: This bit is only affected by RX operations.
4: This bit is affected by TX and RX operations.
5: This bit is *set* when the ON bit (ETHCON1<15>) = 1.
6: This bit is *cleared* when the ON bit (ETHCON1<15>) = 0.

REGISTER 33-15: ETHSTAT: ETHERNET CONTROLLER STATUS REGISTER (CONTINUED)

bit 6 **TXBUSY:** Transmit Busy bit(2,6)

1 = TX logic is receiving data
0 = TX logic is idle

This bit indicates that a packet is currently being transmitted. A change in this status bit is not necessarily reflected by the TXDONE interrupt, as TX packets may be aborted or rejected by the MAC.

bit 5 **RXBUSY:** Receive Busy bit(3,6)

1 = RX logic is receiving data
0 = RX logic is idle

This bit indicates that a packet is currently being received. A change in this status bit is not necessarily reflected by the RXDONE interrupt, as RX packets may be aborted or rejected by the RX filter.

bit 4-0 **Unimplemented:** Read as '0'

Note 1: This bit is only used for RX operations.
2: This bit is only affected by TX operations.
3: This bit is only affected by RX operations.
4: This bit is affected by TX and RX operations.
5: This bit is *set* when the ON bit (ETHCON1<15>) = 1.
6: This bit is *cleared* when the ON bit (ETHCON1<15>) = 0.

 © 2020 Microchip Technology Inc.

REGISTER 33-16: ETHRXOVFLOW: ETHERNET CONTROLLER RECEIVE OVERFLOW STATISTICS REGISTER

Bit Range	Bit 31/23/15/7	Bit 30/22/14/6	Bit 29/21/13/5	Bit 28/20/12/4	Bit 27/19/11/3	Bit 26/18/10/2	Bit 25/17/9/1	Bit 24/16/8/0
31:24	U-0	U-0	U-0	U-0	U-0	U-0	U-0	U-0
	—	—	—	—	—	—	—	—
23:16	U-0	U-0	U-0	U-0	U-0	U-0	U-0	U-0
	—	—	—	—	—	—	—	—
15:8	R/W-0	R/W-0	R/W-0	R/W-0	R/W-0	R/W-0	R/W-0	R/W-0
	RXOVFLWCNT<15:8>							
7:0	R/W-0	R/W-0	R/W-0	R/W-0	R/W-0	R/W-0	R/W-0	R/W-0
	RXOVFLWCNT<7:0>							

Legend:			
R = Readable bit	W = Writable bit	U = Unimplemented bit, read as '0'	
-n = Value at POR	'1' = Bit is set	'0' = Bit is cleared	x = Bit is unknown

bit 31-16 **Unimplemented:** Read as '0'

bit 15-0 **RXOVFLWCNT<15:0>:** Dropped Receive Frames Count bits

Increment counter for frames accepted by the RX filter and subsequently dropped due to internal receive error (RXFIFO overrun). This event also sets the RXOVFLW bit (ETHIRQ<0>) Interrupt flag.

Note 1: This register is only used for RX operations.

2: This register is automatically cleared by hardware after a read operation, unless the byte enables for bytes 0/1 are '0'.

3: It is recommended to use the SET, CLR, or INV registers to set or clear any bit in this register. Setting or clearing any bits in this register should only be done for debug/test purposes.

REGISTER 33-17: ETHFRMTXOK: ETHERNET CONTROLLER FRAMES TRANSMITTED OK STATISTICS REGISTER

Bit Range	Bit 31/23/15/7	Bit 30/22/14/6	Bit 29/21/13/5	Bit 28/20/12/4	Bit 27/19/11/3	Bit 26/18/10/2	Bit 25/17/9/1	Bit 24/16/8/0
31:24	U-0	U-0	U-0	U-0	U-0	U-0	U-0	U-0
	—	—	—	—	—	—	—	—
23:16	U-0	U-0	U-0	U-0	U-0	U-0	U-0	U-0
	—	—	—	—	—	—	—	—
15:8	R/W-0	R/W-0	R/W-0	R/W-0	R/W-0	R/W-0	R/W-0	R/W-0
	FRMTXOKCNT<15:8>							
7:0	R/W-0	R/W-0	R/W-0	R/W-0	R/W-0	R/W-0	R/W-0	R/W-0
	FRMTXOKCNT<7:0>							

Legend:			
R = Readable bit	W = Writable bit	U = Unimplemented bit, read as '0'	
-n = Value at POR	'1' = Bit is set	'0' = Bit is cleared	x = Bit is unknown

bit 31-16 **Unimplemented:** Read as '0'

bit 15-0 **FRMTXOKCNT<15:0>:** Frame Transmitted OK Count bits
Increment counter for frames successfully transmitted.

Note 1: This register is only used for TX operations.

2: This register is automatically cleared by hardware after a read operation, unless the byte enables for bytes 0/1 are '0'.

3: It is recommended to use the SET, CLR, or INV registers to set or clear any bit in this register. Setting or clearing any bits in this register should only be done for debug/test purposes.

 © 2020 Microchip Technology Inc.

REGISTER 33-18: ETHSCOLFRM: ETHERNET CONTROLLER SINGLE COLLISION FRAMES STATISTICS REGISTER

Bit Range	Bit 31/23/15/7	Bit 30/22/14/6	Bit 29/21/13/5	Bit 28/20/12/4	Bit 27/19/11/3	Bit 26/18/10/2	Bit 25/17/9/1	Bit 24/16/8/0
31:24	U-0	U-0	U-0	U-0	U-0	U-0	U-0	U-0
	—	—	—	—	—	—	—	—
23:16	U-0	U-0	U-0	U-0	U-0	U-0	U-0	U-0
	—	—	—	—	—	—	—	—
15:8	R/W-0	R/W-0	R/W-0	R/W-0	R/W-0	R/W-0	R/W-0	R/W-0
	SCOLFRMCNT<15:8>							
7:0	R/W-0	R/W-0	R/W-0	R/W-0	R/W-0	R/W-0	R/W-0	R/W-0
	SCOLFRMCNT<7:0>							

Legend:			
R = Readable bit	W = Writable bit	U = Unimplemented bit, read as '0'	
-n = Value at POR	'1' = Bit is set	'0' = Bit is cleared	x = Bit is unknown

bit 31-16 **Unimplemented:** Read as '0'

bit 15-0 **SCOLFRMCNT<15:0>:** Single Collision Frame Count bits
Increment count for frames that were successfully transmitted on the second try.

Note 1: This register is only used for TX operations.

2: This register is automatically cleared by hardware after a read operation, unless the byte enables for bytes 0/1 are '0'.

3: It is recommended to use the SET, CLR, or INV registers to set or clear any bit in this register. Setting or clearing any bits in this register should only be done for debug/test purposes.

REGISTER 33-19: ETHMCOLFRM: ETHERNET CONTROLLER MULTIPLE COLLISION FRAMES STATISTICS REGISTER

Bit Range	Bit 31/23/15/7	Bit 30/22/14/6	Bit 29/21/13/5	Bit 28/20/12/4	Bit 27/19/11/3	Bit 26/18/10/2	Bit 25/17/9/1	Bit 24/16/8/0
31:24	U-0	U-0	U-0	U-0	U-0	U-0	U-0	U-0
	—	—	—	—	—	—	—	—
23:16	U-0	U-0	U-0	U-0	U-0	U-0	U-0	U-0
	—	—	—	—	—	—	—	—
15:8	R/W-0	R/W-0	R/W-0	R/W-0	R/W-0	R/W-0	R/W-0	R/W-0
	MCOLFRMCNT<15:8>							
7:0	R/W-0	R/W-0	R/W-0	R/W-0	R/W-0	R/W-0	R/W-0	R/W-0
	MCOLFRMCNT<7:0>							

Legend:			
R = Readable bit	W = Writable bit	U = Unimplemented bit, read as '0'	
-n = Value at POR	'1' = Bit is set	'0' = Bit is cleared	x = Bit is unknown

bit 31-16 **Unimplemented:** Read as '0'

bit 15-0 **MCOLFRMCNT<15:0>:** Multiple Collision Frame Count bits
Increment count for frames that were successfully transmitted after there was more than one collision.

Note 1: This register is only used for TX operations.

2: This register is automatically cleared by hardware after a read operation, unless the byte enables for bytes 0/1 are '0'.

3: It is recommended to use the SET, CLR, or INV registers to set or clear any bit in this register. Setting or clearing any bits in this register should only be done for debug/test purposes.

 © 2020 Microchip Technology Inc.

REGISTER 33-20: ETHFRMRXOK: ETHERNET CONTROLLER FRAMES RECEIVED OK STATISTICS REGISTER

Bit Range	Bit 31/23/15/7	Bit 30/22/14/6	Bit 29/21/13/5	Bit 28/20/12/4	Bit 27/19/11/3	Bit 26/18/10/2	Bit 25/17/9/1	Bit 24/16/8/0
31:24	U-0	U-0	U-0	U-0	U-0	U-0	U-0	U-0
	—	—	—	—	—	—	—	—
23:16	U-0	U-0	U-0	U-0	U-0	U-0	U-0	U-0
	—	—	—	—	—	—	—	—
15:8	R/W-0	R/W-0	R/W-0	R/W-0	R/W-0	R/W-0	R/W-0	R/W-0
	FRMRXOKCNT<15:8>							
7:0	R/W-0	R/W-0	R/W-0	R/W-0	R/W-0	R/W-0	R/W-0	R/W-0
	FRMRXOKCNT<7:0>							

Legend:			
R = Readable bit	W = Writable bit	U = Unimplemented bit, read as '0'	
-n = Value at POR	'1' = Bit is set	'0' = Bit is cleared	x = Bit is unknown

bit 31-16 **Unimplemented:** Read as '0'

bit 15-0 **FRMRXOKCNT<15:0>:** Frames Received OK Count bits

Increment count for frames received successfully by the RX filter. This count is not incremented if there is a Frame Check Sequence (FCS) or alignment error.

Note 1: This register is only used for RX operations.

2: This register is automatically cleared by hardware after a read operation, unless the byte enables for bytes 0/1 are '0'.

3: It is recommended to use the SET, CLR, or INV registers to set or clear any bit in this register. Setting or clearing any bits in this register should only be done for debug/test purposes.

REGISTER 33-21: ETHFCSERR: ETHERNET CONTROLLER FRAME CHECK SEQUENCE ERROR STATISTICS REGISTER

Bit Range	Bit 31/23/15/7	Bit 30/22/14/6	Bit 29/21/13/5	Bit 28/20/12/4	Bit 27/19/11/3	Bit 26/18/10/2	Bit 25/17/9/1	Bit 24/16/8/0
31:24	U-0	U-0	U-0	U-0	U-0	U-0	U-0	U-0
	—	—	—	—	—	—	—	—
23:16	U-0	U-0	U-0	U-0	U-0	U-0	U-0	U-0
	—	—	—	—	—	—	—	—
15:8	R/W-0	R/W-0	R/W-0	R/W-0	R/W-0	R/W-0	R/W-0	R/W-0
	FCSERRCNT<15:8>							
7:0	R/W-0	R/W-0	R/W-0	R/W-0	R/W-0	R/W-0	R/W-0	R/W-0
	FCSERRCNT<7:0>							

Legend:			
R = Readable bit	W = Writable bit	U = Unimplemented bit, read as '0'	
-n = Value at POR	'1' = Bit is set	'0' = Bit is cleared	x = Bit is unknown

bit 31-16 **Unimplemented:** Read as '0'

bit 15-0 **FCSERRCNT<15:0>:** FCS Error Count bits

Increment count for frames received with FCS error and the frame length in bits is an integral multiple of 8 bits.

Note 1: This register is only used for RX operations.

2: This register is automatically cleared by hardware after a read operation, unless the byte enables for bytes 0/1 are '0'.

3: It is recommended to use the SET, CLR, or INV registers to set or clear any bit in this register. Setting or clearing any bits in this register should be only done for debug/test purposes.

 © 2020 Microchip Technology Inc.

REGISTER 33-22: ETHALGNERR: ETHERNET CONTROLLER ALIGNMENT ERRORS STATISTICS REGISTER

Bit Range	Bit 31/23/15/7	Bit 30/22/14/6	Bit 29/21/13/5	Bit 28/20/12/4	Bit 27/19/11/3	Bit 26/18/10/2	Bit 25/17/9/1	Bit 24/16/8/0
31:24	U-0	U-0	U-0	U-0	U-0	U-0	U-0	U-0
	—	—	—	—	—	—	—	—
23:16	U-0	U-0	U-0	U-0	U-0	U-0	U-0	U-0
	—	—	—	—	—	—	—	—
15:8	R/W-0	R/W-0	R/W-0	R/W-0	R/W-0	R/W-0	R/W-0	R/W-0
	ALGNERRCNT<15:8>							
7:0	R/W-0	R/W-0	R/W-0	R/W-0	R/W-0	R/W-0	R/W-0	R/W-0
	ALGNERRCNT<7:0>							

Legend:			
R = Readable bit	W = Writable bit	U = Unimplemented bit, read as '0'	
-n = Value at POR	'1' = Bit is set	'0' = Bit is cleared	x = Bit is unknown

bit 31-16 **Unimplemented:** Read as '0'

bit 15-0 **ALGNERRCNT<15:0>:** Alignment Error Count bits

Increment count for frames with alignment errors. Note that an alignment error is a frame that has an FCS error and the frame length in bits is not an integral multiple of 8 bits (dribble nibble).

Note 1: This register is only used for RX operations.

2: This register is automatically cleared by hardware after a read operation, unless the byte enables for bytes 0/1 are '0'.

3: It is recommended to use the SET, CLR, or INV registers to set or clear any bit in this register. Setting or clearing any bits in this register should be only done for debug/test purposes.

REGISTER 33-23: EMAC1CFG1: ETHERNET CONTROLLER MAC CONFIGURATION 1 REGISTER

Bit Range	Bit 31/23/15/7	Bit 30/22/14/6	Bit 29/21/13/5	Bit 28/20/12/4	Bit 27/19/11/3	Bit 26/18/10/2	Bit 25/17/9/1	Bit 24/16/8/0
31:24	U-0	U-0	U-0	U-0	U-0	U-0	U-0	U-0
	—	—	—	—	—	—	—	—
23:16	U-0	U-0	U-0	U-0	U-0	U-0	U-0	U-0
	—	—	—	—	—	—	—	—
15:8	R/W-1	R/W-0	U-0	U-0	R/W-0	R/W-0	R/W-0	R/W-0
	SOFT RESET	SIM RESET	—	—	RESET RMCS	RESET RFUN	RESET TMCS	RESET TFUN
7:0	U-0	U-0	U-0	R/W-0	R/W-1	R/W-1	R/W-0	R/W-1
	—	—	—	LOOPBACK	TXPAUSE	RXPAUSE	PASSALL	RXENABLE

Legend:			
R = Readable bit	W = Writable bit	U = Unimplemented bit, read as '0'	
-n = Value at POR	'1' = Bit is set	'0' = Bit is cleared	x = Bit is unknown

bit 31-16 **Unimplemented:** Read as '0'

bit 15 **SOFTRESET:** Soft Reset bit
Setting this bit puts the MACMII in Reset. Its default value is '1'.

bit 14 **SIMRESET:** Simulation Reset bit
Setting this bit causes a Reset to the random number generator within the transmit function.

bit 13-12 **Unimplemented:** Read as '0'

bit 11 **RESETRMCS:** Reset MCS/RX bit
Setting this bit puts the MAC control sub-layer/receive domain logic in Reset.

bit 10 **RESETRFUN:** Reset RX Function bit
Setting this bit puts the MAC receive function logic in Reset.

bit 9 **RESETTMCS:** Reset MCS/TX bit
Setting this bit puts the MAC Control Sub-layer/TX domain logic in Reset.

bit 8 **RESETTFUN:** Reset TX Function bit
Setting this bit puts the MAC transmit function logic in Reset.

bit 7-5 **Unimplemented:** Read as '0'

bit 4 **LOOPBACK:** MAC Loopback mode bit
1 = MAC transmit interface is loop backed to the MAC Receive interface
0 = MAC normal operation

bit 3 **TXPAUSE:** MAC TX Flow Control bit
1 = PAUSE flow control frames are allowed to be transmitted
0 = PAUSE flow control frames are blocked

bit 2 **RXPAUSE:** MAC RX Flow Control bit
1 = The MAC acts upon received PAUSE flow control frames
0 = Received PAUSE flow control frames are ignored

bit 1 **PASSALL:** MAC Pass all Receive Frames bit
1 = The MAC accepts all frames regardless of type (normal vs. control)
0 = The received Control frames are ignored

bit 0 **RXENABLE:** MAC Receive Enable bit
1 = Enable the MAC receiving of frames
0 = Disable the MAC receiving of frames

Note: Both 16-bit and 32-bit accesses are allowed to these registers (including the SET, CLR and INV registers). 8-bit accesses are not allowed and are ignored by the hardware.

 © 2020 Microchip Technology Inc.

REGISTER 33-24: EMAC1CFG2: ETHERNET CONTROLLER MAC CONFIGURATION 2 REGISTER

Bit Range	Bit 31/23/15/7	Bit 30/22/14/6	Bit 29/21/13/5	Bit 28/20/12/4	Bit 27/19/11/3	Bit 26/18/10/2	Bit 25/17/9/1	Bit 25/16/8/0
31:24	U-0	U-0	U-0	U-0	U-0	U-0	U-0	U-0
	—	—	—	—	—	—	—	—
23:16	U-0	U-0	U-0	U-0	U-0	U-0	U-0	U-0
	—	—	—	—	—	—	—	—
15:8	U-0	R/W-1	R/W-0	R/W-0	U-0	U-0	R/W-0	R/W-0
	—	EXCESS DFR	BPNOBK OFF	NOBK OFF	—	—	LONGPRE	PUREPRE
7:0	R/W-1	R/W-0	R/W-1	R/W-1	R/W-0	R/W-0	R/W-1	R/W-0
	AUTOPAD(1,2)	VLANPAD(1,2)	PADENABLE(1,3)	CRCENABLE	DELAYCRC	HUGEFRM	LENGTHCK	FULLDPLX

Legend:			
R = Readable bit	W = Writable bit	U = Unimplemented bit, read as '0'	
-n = Value at POR	'1' = Bit is set	'0' = Bit is cleared	x = Bit is unknown

bit 31-15 **Unimplemented:** Read as '0'

bit 14 **EXCESSDER:** Excess Defer bit
- 1 = MAC defers to carrier indefinitely as per the standard
- 0 = MAC aborts when the excessive deferral limit is reached

bit 13 **BPNOBKOFF:** Backpressure/No Backoff bit
- 1 = MAC after incidentally causing a collision during backpressure, immediately retransmits without backoff reducing the chance of further collisions and ensuring transmit packets get sent
- 0 = MAC does not remove the backoff

bit 12 **NOBKOFF:** No Backoff bit
- 1 = Following a collision, the MAC immediately retransmits rather than using the Binary Exponential Backoff algorithm as specified in the standard
- 0 = Following a collision, the MAC uses the Binary Exponential Backoff algorithm

bit 11-10 **Unimplemented:** Read as '0'

bit 9 **LONGPRE:** Long Preamble Enforcement bit
- 1 = MAC only allows receive packets which contain preamble fields less than 12 bytes in length
- 0 = MAC allows any length preamble as per the standard

bit 8 **PUREPRE:** Pure Preamble Enforcement bit
- 1 = MAC verifies the content of the preamble to ensure it contains 0x55 and is error-free. A packet with errors in its preamble is discarded
- 0 = MAC does not perform any preamble checking

bit 7 **AUTOPAD:** Automatic Detect Pad Enable bit(1,2)
- 1 = MAC automatically detects the type of frame, either tagged or untagged, by comparing the two octets following the source address with 0x8100 (VLAN Protocol ID) and pad accordingly
- 0 = MAC does not perform automatic detection

Note 1: Table 33-4 provides a description of the pad function based on the configuration of this register.

2: This bit is ignored if the PADENABLE bit is cleared.

3: This bit is used in conjunction with the AUTOPAD and VLANPAD bits.

4: Both 16-bit and 32-bit accesses are allowed to these registers (including the SET, CLR and INV registers). 8-bit accesses are not allowed and are ignored by the hardware.

REGISTER 33-24: EMAC1CFG2: ETHERNET CONTROLLER MAC CONFIGURATION 2 REGISTER (CONTINUED)

bit 6 **VLANPAD:** VLAN Pad Enable bit(1,2)
1 = MAC pads all short frames to 64 bytes and append a valid CRC
0 = MAC does not perform padding of short frames

bit 5 **PADENABLE:** Pad/CRC Enable bit(1,3)
1 = MAC pads all short frames
0 = Frames presented to the MAC have a valid length

bit 4 **CRCENABLE:** CRC Enable1 bit
1 = MAC appends a CRC to every frame whether padding was required or not. Must be set if the PADENABLE bit is set.
0 = Frames presented to the MAC have a valid CRC

bit 3 **DELAYCRC:** Delayed CRC bit
This bit determines the number of bytes, if any, of proprietary header information that exist on the front of the IEEE 802.3 frames.
1 = Four bytes of header (ignored by the CRC function)
0 = No proprietary header

bit 2 **HUGEFRM:** Huge Frame enable bit
1 = Frames of any length are transmitted and received
0 = Huge frames are not allowed for receive or transmit

bit 1 **LENGTHCK:** Frame Length checking bit
1 = Both transmit and receive frame lengths are compared to the length/type field. If the length/type field represents a length then the check is performed. Mismatches are reported on the transmit/receive statistics vector.
0 = Length/type field check is not performed

bit 0 **FULLDPLX:** Full-Duplex Operation bit
1 = MAC operates in Full-Duplex mode
0 = MAC operates in Half-Duplex mode

Note 1: Table 33-4 provides a description of the pad function based on the configuration of this register.
2: This bit is ignored if the PADENABLE bit is cleared.
3: This bit is used in conjunction with the AUTOPAD and VLANPAD bits.
4: Both 16-bit and 32-bit accesses are allowed to these registers (including the SET, CLR and INV registers). 8-bit accesses are not allowed and are ignored by the hardware.

TABLE 33-4: PAD OPERATION

Type	AUTOPAD	VLANPAD	PADENABLE	Action
Any	x	x	0	No pad, check CRC
Any	0	0	1	Pad to 60 Bytes, append CRC
Any	x	1	1	Pad to 64 Bytes, append CRC
Any	1	0	1	If untagged: Pad to 60 Bytes, append CRC If VLAN tagged: Pad to 64 Bytes, append CRC

 © 2020 Microchip Technology Inc.

REGISTER 33-25: EMAC1IPGT: ETHERNET CONTROLLER MAC BACK-TO-BACK INTERPACKET GAP REGISTER

Bit Range	Bit 31/23/15/7	Bit 30/22/14/6	Bit 29/21/13/5	Bit 28/20/12/4	Bit 27/19/11/3	Bit 26/18/10/2	0Bit 25/17/9/1	Bit 24/16/8/0
31:24	U-0	U-0	U-0	U-0	U-0	U-0	U-0	U-0
	—	—	—	—	—	—	—	—
23:16	U-0	U-0	U-0	U-0	U-0	U-0	U-0	U-0
	—	—	—	—	—	—	—	—
15:8	U-0	U-0	U-0	U-0	U-0	U-0	U-0	U-0
	—	—	—	—	—	—	—	—
7:0	U-0	R/W-0	R/W-0	R/W-1	R/W-0	R/W-0	R/W-1	R/W-0
	—	B2BIPKTGP<6:0>						

Legend:			
R = Readable bit	W = Writable bit	U = Unimplemented bit, read as '0'	
-n = Value at POR	'1' = Bit is set	'0' = Bit is cleared	x = Bit is unknown

bit 31-7 **Unimplemented:** Read as '0'

bit 6-0 **B2BIPKTGP<6:0>:** Back-to-Back Interpacket Gap bits

This is a programmable field representing the nibble time offset of the minimum possible period between the end of any transmitted packet, to the beginning of the next. In Full-Duplex mode, the register value should be the desired period in nibble times minus 3. In Half-Duplex mode, the register value should be the desired period in nibble times minus 6. In Full-Duplex mode, the recommended setting is 0x15 (21d), which represents the minimum IPG of 0.96 µs (in 100 Mbps) or 9.6 µs (in 10 Mbps). In Half-Duplex mode, the recommended setting is 0x12 (18d), which also represents the minimum IPG of 0.96 µs (in 100 Mbps) or 9.6 µs (in 10 Mbps).

Note: Both 16-bit and 32-bit accesses are allowed to these registers (including the SET, CLR and INV registers). 8-bit accesses are not allowed and are ignored by the hardware.

REGISTER 33-26: EMAC1IPGR: ETHERNET CONTROLLER MAC NON-BACK-TO-BACK INTERPACKET GAP REGISTER

Bit Range	Bit 31/23/15/7	Bit 30/22/14/6	Bit 29/21/13/5	Bit 28/20/12/4	Bit 27/19/11/3	Bit 26/18/10/2	Bit 25/17/9/1	Bit 24/16/8/0
31:24	U-0	U-0	U-0	U-0	U-0	U-0	U-0	U-0
	—	—	—	—	—	—	—	—
23:16	U-0	U-0	U-0	U-0	U-0	U-0	U-0	U-0
	—	—	—	—	—	—	—	—
15:8	U-0	R/W-0	R/W-0	R/W-0	R/W-1	R/W-1	R/W-0	R/W-0
	—	NB2BIPKTGP1<6:0>						
7:0	U-0	R/W-0	R/W-0	R/W-1	R/W-0	R/W-0	R/W-1	R/W-0
	—	NB2BIPKTGP2<6:0>						

Legend:			
R = Readable bit	W = Writable bit	U = Unimplemented bit, read as '0'	
-n = Value at POR	'1' = Bit is set	'0' = Bit is cleared	x = Bit is unknown

bit 31-15 **Unimplemented:** Read as '0'

bit 14-8 **NB2BIPKTGP1<6:0>:** Non-Back-to-Back Interpacket Gap Part 1 bits

This is a programmable field representing the optional carrierSense window referenced in *Section 4.2.3.2.1 "Deference" of the IEEE 802.3 Specification*. If carrier is detected during the timing of IPGR1, the MAC defers to carrier. If, however, carrier becomes after IPGR1, the MAC continues timing IPGR2 and transmits, knowingly causing a collision, thus ensuring fair access to medium. Its range of values is 0x0 to IPGR2. Its recommend value is 0xC (12d).

bit 7 **Unimplemented:** Read as '0'

bit 6-0 **NB2BIPKTGP2<6:0>:** Non-Back-to-Back Interpacket Gap Part 2 bits

This is a programmable field representing the non-back-to-back Inter-Packet-Gap. Its recommended value is 0x12 (18d), which represents the minimum IPG of 0.96 µs (in 100 Mbps) or 9.6 µs (in 10 Mbps).

Note: Both 16-bit and 32-bit accesses are allowed to these registers (including the SET, CLR and INV registers). 8-bit accesses are not allowed and are ignored by the hardware.

 © 2020 Microchip Technology Inc.

REGISTER 33-27: EMAC1CLRT: ETHERNET CONTROLLER MAC COLLISION WINDOW/RETRY LIMIT REGISTER

Bit Range	Bit 31/23/15/7	Bit 30/22/14/6	Bit 29/21/13/5	Bit 28/20/12/4	Bit 27/19/11/3	Bit 26/18/10/2	Bit 25/17/9/1	Bit 24/16/8/0
31:24	U-0	U-0	U-0	U-0	U-0	U-0	U-0	U-0
	—	—	—	—	—	—	—	—
23:16	U-0	U-0	U-0	U-0	U-0	U-0	U-0	U-0
	—	—	—	—	—	—	—	—
15:8	U-0	U-0	R/W-1	R/W-1	R/W-0	R/W-1	R/W-1	R/W-1
	—	—	CWINDOW<5:0>					
7:0	U-0	U-0	U-0	U-0	R/W-1	R/W-1	R/W-1	R/W-1
	—	—	—	—	RETX<3:0>			

Legend:			
R = Readable bit	W = Writable bit	U = Unimplemented bit, read as '0'	
-n = Value at POR	'1' = Bit is set	'0' = Bit is cleared	x = Bit is unknown

bit 31-14 **Unimplemented:** Read as '0'

bit 13-8 **CWINDOW<5:0>:** Collision Window bits

This is a programmable field representing the slot time or collision window during which collisions occur in properly configured networks. Since the collision window starts at the beginning of transmission, the preamble and SFD is included. Its default of 0x37 (55d) corresponds to the count of frame bytes at the end of the window.

bit 7-4 **Unimplemented:** Read as '0'

bit 3-0 **RETX<3:0>:** Retransmission Maximum bits

This is a programmable field specifying the number of retransmission attempts following a collision before aborting the packet due to excessive collisions. The Standard specifies the maximum number of attempts (attemptLimit) to be 0xF (15d). Its default is '0xF'.

Note: Both 16-bit and 32-bit accesses are allowed to these registers (including the SET, CLR and INV registers). 8-bit accesses are not allowed and are ignored by the hardware.

REGISTER 33-28: EMAC1MAXF: ETHERNET CONTROLLER MAC MAXIMUM FRAME LENGTH REGISTER

Bit Range	Bit 31/23/15/7	Bit 30/22/14/6	Bit 29/21/13/5	Bit 28/20/12/4	Bit 27/19/11/3	Bit 26/18/10/2	Bit 25/17/9/1	Bit 24/16/8/0
31:24	U-0	U-0	U-0	U-0	U-0	U-0	U-0	U-0
	—	—	—	—	—	—	—	—
23:16	U-0	U-0	U-0	U-0	U-0	U-0	U-0	U-0
	—	—	—	—	—	—	—	—
15:8	R/W-0	R/W-0	R/W-0	R/W-0	R/W-0	R/W-1	R/W-0	R/W-1
	MACMAXF<15:8>(1)							
7:0	R/W-1	R/W-1	R/W-1	R/W-0	R/W-1	R/W-1	R/W-1	R/W-0
	MACMAXF<7:0>(1)							

Legend:			
R = Readable bit	W = Writable bit	U = Unimplemented bit, read as '0'	
-n = Value at POR	'1' = Bit is set	'0' = Bit is cleared	x = Bit is unknown

bit 31-16 **Unimplemented:** Read as '0'

bit 15-0 **MACMAXF<15:0>:** Maximum Frame Length bits(1)

These bits reset to 0x05EE, which represents a maximum receive frame of 1518 octets. An untagged maximum size Ethernet frame is 1518 octets. A tagged frame adds four octets for a total of 1522 octets. If a shorter/longer maximum length restriction is desired, program this 16-bit field.

Note 1: If a proprietary header is allowed, this bit should be adjusted accordingly. For example, if 4-byte headers are prepended to frames, MACMAXF could be set to 1527 octets. This would allow the maximum VLAN tagged frame plus the 4-byte header.

Note: Both 16-bit and 32-bit accesses are allowed to these registers (including the SET, CLR and INV registers). 8-bit accesses are not allowed and are ignored by the hardware.

 © 2020 Microchip Technology Inc.

REGISTER 33-29: EMAC1SUPP: ETHERNET CONTROLLER MAC PHY SUPPORT REGISTER

Bit Range	Bit 31/23/15/7	Bit 30/22/14/6	Bit 29/21/13/5	Bit 28/20/12/4	Bit 27/19/11/3	Bit 26/18/10/2	Bit 25/17/9/1	Bit 24/16/8/0
31:24	U-0	U-0	U-0	U-0	U-0	U-0	U-0	U-0
	—	—	—	—	—	—	—	—
23:16	U-0	U-0	U-0	U-0	U-0	U-0	U-0	U-0
	—	—	—	—	—	—	—	—
15:8	U-0	U-0	U-0	U-0	R/W-0	U-0	U-0	R/W-0
	—	—	—	—	RESETRMII(1)	—	—	SPEEDRMII(1)
7:0	U-0	U-0	U-0	U-0	U-0	U-0	U-0	U-0
	—	—	—	—	—	—	—	—

Legend:			
R = Readable bit	W = Writable bit	U = Unimplemented bit, read as '0'	
-n = Value at POR	'1' = Bit is set	'0' = Bit is cleared	x = Bit is unknown

bit 31-12 **Unimplemented:** Read as '0'

bit 11 **RESETRMII:** Reset RMII Logic bit(1)
1 = Reset the MAC RMII module
0 = Normal operation

bit 10-9 **Unimplemented:** Read as '0'

bit 8 **SPEEDRMII:** RMII Speed bit(1)
This bit configures the reduced MII logic for the current operating speed.
1 = RMII is running at 100 Mbps
0 = RMII is running at 10 Mbps

bit 7-0 **Unimplemented:** Read as '0'

Note 1: This bit is only used for the RMII module.

2: Both 16-bit and 32-bit accesses are allowed to these registers (including the SET, CLR and INV registers). 8-bit accesses are not allowed and are ignored by the hardware.

REGISTER 33-30: EMAC1TEST: ETHERNET CONTROLLER MAC TEST REGISTER

Bit Range	Bit 31/23/15/7	Bit 30/22/14/6	Bit 29/21/13/5	Bit 28/20/12/4	Bit 27/19/11/3	Bit 26/18/10/2	Bit 25/17/9/1	Bit 24/16/8/0
31:24	U-0	U-0	U-0	U-0	U-0	U-0	U-0	U-0
	—	—	—	—	—	—	—	—
23:16	U-0	U-0	U-0	U-0	U-0	U-0	U-0	U-0
	—	—	—	—	—	—	—	—
15:8	U-0	U-0	U-0	U-0	U-0	U-0	U-0	U-0
	—	—	—	—	—	—	—	—
7:0	U-0	U-0	U-0	U-0	U-0	R/W-0	R/W-0	R/W-0
	—	—	—	—	—	TESTBP	TESTPAUSE(1)	SHRTQNTA(1)

Legend:			
R = Readable bit	W = Writable bit	U = Unimplemented bit, read as '0'	
-n = Value at POR	'1' = Bit is set	'0' = Bit is cleared	x = Bit is unknown

bit 31-3 **Unimplemented:** Read as '0'

bit 2 **TESTBP:** Test Backpressure bit
- 1 = MAC asserts backpressure on the link. Backpressure causes preamble to be transmitted, raising carrier sense. A transmit packet from the system is sent during backpressure.
- 0 = Normal operation

bit 1 **TESTPAUSE:** Test PAUSE bit(1)
- 1 = MAC control sub-layer inhibits transmissions, just as if a PAUSE receive control frame with a non-zero pause time parameter was received
- 0 = Normal operation

bit 0 **SHRTQNTA:** Shortcut PAUSE Quanta bit(1)
- 1 = MAC reduces the effective PAUSE Quanta from 64 byte-times to 1 byte-time
- 0 = Normal operation

Note 1: This bit is only used for testing purposes.

2: Both 16-bit and 32-bit accesses are allowed to these registers (including the SET, CLR and INV registers). 8-bit accesses are not allowed and are ignored by the hardware

 © 2020 Microchip Technology Inc.

REGISTER 33-31: EMAC1SA0: ETHERNET CONTROLLER MAC STATION ADDRESS 0 REGISTER

Bit Range	Bit 31/23/15/7	Bit 30/22/14/6	Bit 29/21/13/5	Bit 28/20/12/4	Bit 27/19/11/3	Bit 26/18/10/2	Bit 25/17/9/1	Bit 24/16/8/0
31:24	U-0	U-0	U-0	U-0	U-0	U-0	U-0	U-0
	—	—	—	—	—	—	—	—
23:16	U-0	U-0	U-0	U-0	U-0	U-0	U-0	U-0
	—	—	—	—	—	—	—	—
15:8	R/W-P	R/W-P	R/W-P	R/W-P	R/W-P	R/W-P	R/W-P	R/W-P
	STNADDR6<7:0>							
7:0	R/W-P	R/W-P	R/W-P	R/W-P	R/W-P	R/W-P	R/W-P	R/W-P
	STNADDR5<7:0>							

Legend:		P = Programmable bit	
R = Readable bit	W = Writable bit	U = Unimplemented bit, read as '0'	
-n = Value at POR	'1' = Bit is set	'0' = Bit is cleared	x = Bit is unknown

bit 31-16 **Unimplemented:** Read as '0'

bit 15-8 **STNADDR6<7:0>:** Station Address Octet 6 bits
These bits hold the sixth transmitted octet of the station address.

bit 7-0 **STNADDR5<7:0>:** Station Address Octet 5 bits
These bits hold the fifth transmitted octet of the station address.

Note 1: Both 16-bit and 32-bit accesses are allowed to these registers (including the SET, CLR and INV registers). 8-bit accesses are not allowed and are ignored by the hardware.

2: This register is loaded at Reset from the factory preprogrammed station address.

REGISTER 33-32: EMAC1SA1: ETHERNET CONTROLLER MAC STATION ADDRESS 1 REGISTER

Bit Range	Bit 31/23/15/7	Bit 30/22/14/6	Bit 29/21/13/5	Bit 28/20/12/4	Bit 27/19/11/3	Bit 26/18/10/2	Bit 25/17/9/1	Bit 24/16/8/0
31:24	U-0	U-0	U-0	U-0	U-0	U-0	U-0	U-0
	—	—	—	—	—	—	—	—
23:16	U-0	U-0	U-0	U-0	U-0	U-0	U-0	U-0
	—	—	—	—	—	—	—	—
15:8	R/W-P	R/W-P	R/W-P	R/W-P	R/W-P	R/W-P	R/W-P	R/W-P
	STNADDR4<7:0>							
7:0	R/W-P	R/W-P	R/W-P	R/W-P	R/W-P	R/W-P	R/W-P	R/W-P
	STNADDR3<7:0>							

Legend:		P = Programmable bit	
R = Readable bit	W = Writable bit	U = Unimplemented bit, read as '0'	
-n = Value at POR	'1' = Bit is set	'0' = Bit is cleared	x = Bit is unknown

bit 31-16 **Unimplemented:** Read as '0'

bit 15-8 **STNADDR4<7:0>:** Station Address Octet 4 bits
These bits hold the fourth transmitted octet of the station address.

bit 7-0 **STNADDR3<7:0>:** Station Address Octet 3 bits
These bits hold the third transmitted octet of the station address.

Note 1: Both 16-bit and 32-bit accesses are allowed to these registers (including the SET, CLR and INV registers). 8-bit accesses are not allowed and are ignored by the hardware.

2: This register is loaded at Reset from the factory preprogrammed station address.

 © 2020 Microchip Technology Inc.

REGISTER 33-33: EMAC1SA2: ETHERNET CONTROLLER MAC STATION ADDRESS 2 REGISTER

Bit Range	Bit 31/23/15/7	Bit 30/22/14/6	Bit 29/21/13/5	Bit 28/20/12/4	Bit 27/19/11/3	Bit 26/18/10/2	Bit 25/17/9/1	Bit 24/16/8/0
31:24	U-0	U-0	U-0	U-0	U-0	U-0	U-0	U-0
	—	—	—	—	—	—	—	—
23:16	U-0	U-0	U-0	U-0	U-0	U-0	U-0	U-0
	—	—	—	—	—	—	—	—
15:8	R/W-P	R/W-P	R/W-P	R/W-P	R/W-P	R/W-P	R/W-P	R/W-P
	STNADDR2<7:0>							
7:0	R/W-P	R/W-P	R/W-P	R/W-P	R/W-P	R/W-P	R/W-P	R/W-P
	STNADDR1<7:0>							

Legend:		P = Programmable bit	
R = Readable bit	W = Writable bit	U = Unimplemented bit, read as '0'	
-n = Value at POR	'1' = Bit is set	'0' = Bit is cleared	x = Bit is unknown

bit 31-16 **Reserved:** Maintain as '0'; ignore read

bit 15-8 **STNADDR2<7:0>:** Station Address Octet 2 bits
These bits hold the second transmitted octet of the station address.

bit 7-0 **STNADDR1<7:0>:** Station Address Octet 1 bits
These bits hold the most significant (first transmitted) octet of the station address.

Note 1: Both 16-bit and 32-bit accesses are allowed to these registers (including the SET, CLR and INV registers). 8-bit accesses are not allowed and are ignored by the hardware.

2: This register is loaded at Reset from the factory preprogrammed station address.

 © 2020 Microchip Technology Inc.

34.0 ENHANCED CAPACITIVE VOLTAGE DIVIDER (CVD) CONTROLLER

The PIC32MZ W1 device contains a hardware CVD controller, which supports enhanced CVD Self+Mutual measurements. The enhanced CVD controller offloads the CPU by performing CVD scans with programmable phase timing and oversampling. Also, the enhanced CVD controller calculates the measurement deltas and detects the touches based on thresholds.

Key features of the ENHANCED CVD controller include:

- Self measurement for basic touch detection.
- AddCap control to optimize sensitivity on systems with small sample capacitors.
- Support for busing of multiple RX inputs and/or TX outputs for detecting touch over larger areas and algorithmically searching for touch location.
- Four Scan Descriptors control the scan settings to enable SW controlled search algorithms by loading the next scan parameters while one is in progress.
- Oversampling of measurements to increase signal-to-noise ratio.
- Ability to control sequencing order of RX and TX scanning.
- Programmable thresholding to limit the data to the CPU to only those which exceed set threshold.
- Supports a maximum of 16 RX/TX channels for touch measurements.

The enhanced CVD controls the ADC core in a simplified mode that supports only the needs of CVD. The enhanced CVD controls the pin functions also. The RX and TX pins connect to a matrix of button electrodes or a touch screen/touch pad electrode grid.The capacitance of these electrodes will be measured to determine a touch or an approach.

Each RX/TX pin is assigned to an RX/TX index via SFRs. Each scan can span multiple RX/TX indexes enabling the user to scan multiple RX inputs in parallel, or drive mulitple TX outputs in parallel. This is useful for doing full-panel touch detection (IE: for wakeup event).

34.1 SCAN DESCRIPTORS

The enhanced CVD supports four scan descriptors as part of the register set. Each descriptor indicates:

- RX indexes to be scanned,
- TX indexes to be driven,
- Number of RX indexes to scan at one time
- Number of TX indexes to scan at one time
- Independent enable for Self (RX-drive) and Self + Mutual modes
- Channel timing Control
- Oversampling/threshold support
- Provision to enable an interrupt when complete or when threshold exceeded

The four descriptors enable the user software to identifying the exact touch location quickly, while avoiding the need to scan the entire RX/TX set. For example: Descriptor 1 could be configured to scan all RX inputs together while driving all TX outputs together. The software can pre-load the next descriptor to scan the screen in two halves, and the following descriptors to each scan either the left or right halves in two halves. While the hardware moves through the descriptors, the software can follow it and update used descriptors to continue the search based on the results of prior scans.

Figure 34-1 illustrates a block diagram of the enhanced CVD controller.

FIGURE 34-1: ENHANCED CVD CONTROLLER BLOCK DIAGRAM

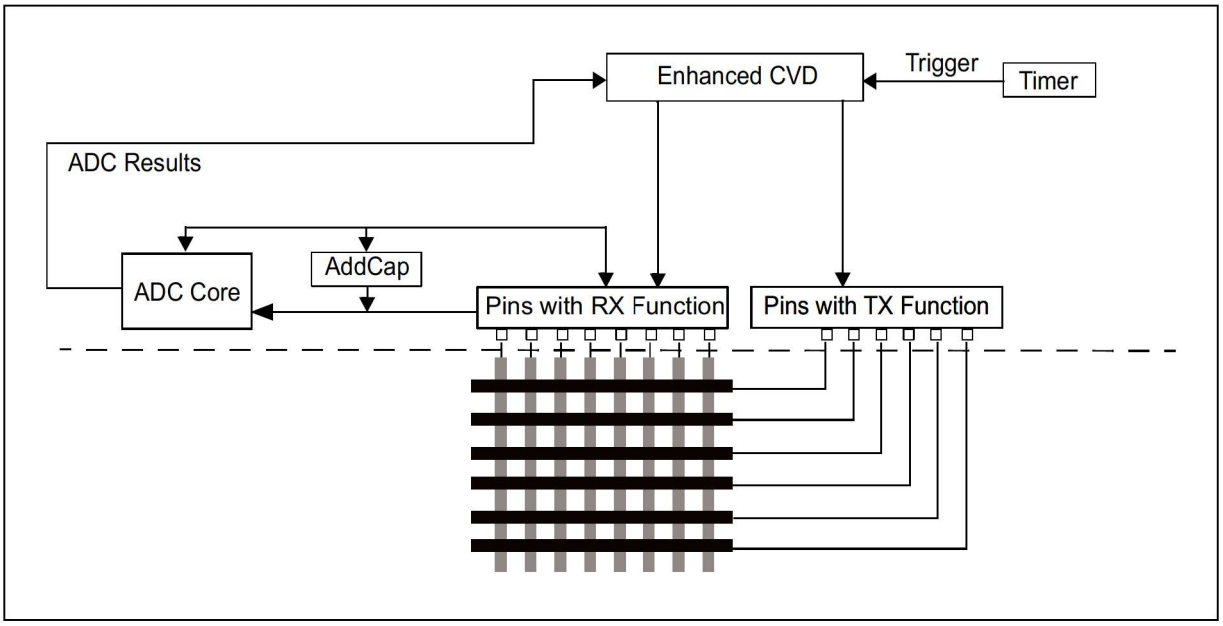

 © 2020 Microchip Technology Inc.

34.2 CVD Control Registers

TABLE 34-1: ENHANCED CVD CONTROLLER REGISTER MAP SUMMARY

Virtual Address (BF82_#)	Register Name(1)	Bit Range	Bits																POR Values
			31/15	30/14	29/13	28/12	27/11	26/10	25/9	24/8	23/7	22/6	21/5	20/4	19/3	18/2	17/1	16/0	
4000	CVDCON	31:16	ON	—	SIDL	ORDER	SDHOLD	—	ABORT	SWTRIG	THSTR	—	—	—	CVDIEN	FIFOIEN	FIFOTH<1:0>		0000
		15:0	FIFOTH<7:0>								—	—	CLKSEL<1:0>						0000
4004	CVDADC	31:16	—	—	—	—	—	—	—	—	—	—	—	—	—	—	—	—	0000
		15:0	—	—	—	—	—	—	—	—	—	—	—	—	DIFF-PEN	DIGEN7	SELRES<1:0>		0000
4008	CVDSTAT	31:16	FIFOFULL	FIFOWM	FIFOMT	—	—	—	FIFOCNT<9:0>										0000
		15:0	—	SD4INT	SD4DONE	SD4BUSY	—	SD3INT	SD3-DONE	SD3BUSY	—	SD2INT	SD2-DONE	SD2BUSY	—	SD1INT	SD1-DONE	SD1BUSY	0000
400C	CVDRES0H	31:16	—	—	—	—	—	—	—	—	POS<7:0>								0000
		15:0	POS<15:0>																0000
4010	CVDRES0L	31:16	—	—	—	—	—	—	—	—	NEG<7:0>								0000
		15:0	NEG<15:0>																0000
4014	CVDRES0D	31:16	TXINDEX<4:0>					—	SDNUM<1:0>		RXINDEX<4:0>					—	DELTA<1:0>		0000
		15:0	DELTA<15:0>																0000
4080	CVDRX0	31:16	—	—	RXAN3<5:0>						—	—	RXAN2<5:0>						0000
		15:0	—	—	RXAN1<5:0>						—	—	RXAN0<5:0>						0000
4084	CVDRX1	31:16	—	—	RXAN7<5:0>						—	—	RXAN6<5:0>						0000
		15:0	—	—	RXAN5<5:0>						—	—	RXAN4<5:0>						0000
4088	CVDRX2	31:16	—	—	RXAN11<5:0>						—	—	RXAN10<5:0>						0000
		15:0	—	—	RXAN9<5:0>						—	—	RXAN8<5:0>						0000
408C	CVDRX3	31:16	—	—	RXAN15<5:0>						—	—	RXAN14<5:0>						0000
		15:0	—	—	RXAN13<5:0>						—	—	RXAN12<5:0>						0000
40C0	CVDTX0	31:16	—	—	TXAN3<5:0>						—	—	TXAN2<5:0>						0000
		15:0	—	—	TXAN1<5:0>						—	—	TXAN0<5:0>						0000

Legend: x = unknown value on Reset; — = unimplemented, read as '0'. Reset values are shown in hexadecimal.

© 2020 Microchip Technology Inc.

TABLE 34-1: ENHANCED CVD CONTROLLER REGISTER MAP SUMMARY (CONTINUED)

Virtual Address (BF82_#)	Register Name(1)	Bit Range	Bits																POR Values
			31/15	30/14	29/13	28/12	27/11	26/10	25/9	24/8	23/7	22/6	21/5	20/4	19/3	18/2	17/1	16/0	
40C4	CVDTX1	31:16	—	—	TXAN7<5:0>						—	—	TXAN6<5:0>						0000
		15:0	—	—	TXAN5<5:0>						—	—	TXAN4<5:0>						0000
40C8	CVDTX2	31:16	—	—	TXAN11<5:0>						—	—	TXAN10<5:0>						0000
		15:0	—	—	TXAN9<5:0>						—	—	TXAN8<5:0>						0000
40CC	CVDTX3	31:16	—	—	TXAN15<5:0>						—	—	TXAN14<5:0>						0000
		15:0	—	—	TXAN13<5:0>						—	—	TXAN12<5:0>						0000
4100	CVDSD0C1	31:16	SD0THRESH<15:8>																0000
		15:0	SD0THRESH<7:0>								SD0OVRSAMP<7:0>								0000
4104	CVDSD0C2	31:16	SD0TXSTRIDE2<1:0>		SD0TXEND<5:0>						SD0TX-STRIDE1<1:0>		SD0TXBEG<5:0>						0000
		15:0	SD0RXSTRIDE2<1:0>		SD0RXEND<5:0>						SD0RX-STRIDE1<1:0>		SD0RXBEG<5:0>						0000
4108	CVDSD0C3	31:16	SD0EN<1:0>		—	—	SD0BUF	SD0IEN	SD0SELF	SD0MUT	—	—	—	—	CVDEN	CVDCPL<2:0>			0000
		15:0	—	SD0ACQTIME<6:0>							—	SD0CHGTIME<6:0>							0000
410C	CVDSD0T2	31:16	—	SD0POLTIME<6:0>							—	SD0OVRTIME<6:0>							0000
		15:0	—	SD0CHNTIME<6:0>							—	SD0CONTIME<6:0>							0000
4110	CVDSD1C1	31:16	SD1THRESH<31:16>																0000
		15:0	SD1THRESH<7:0>								SD1OVRSAMP<7:0>								0000
4114	CVDSD1C2	31:16	SD1TXSTRIDE2<1:0>		SD1TXEND<5:0>						SD1TX-STRIDE1<1:0>		SD1TXBEG<5:0>						0000
		15:0	SD1RXSTRIDE2<1:0>		SD1RXEND<5:0>						SD1RX-STRIDE1<1:0>		SD1RXBEG<5:0>						0000
4118	CVDSD1C3	31:16	SD1EN<1:0>		—	—	SD1BUF	SD1IEN	SD1SELF	SD1MUT	—	—	—	—	CVDEN	CVDCPL<2:0>			0000
		15:0	—	SD1ACQTIME<6:0>							—	SD1CHGTIME<6:0>							0000
411C	CVDSD1T2	31:16	—	SD1POLTIME<6:0>							—	SD1OVRTIME<6:0>							0000
		15:0	—	SD1CHNTIME<6:0>							—	SD1CONTIME<6:0>							0000
4120	CVDSD2C1	31:16	SD2THRESH<31:16>																0000
		15:0	SD2THRESH<7:0>								SD2OVRSAMP<7:0>								0000

Legend: x = unknown value on Reset; — = unimplemented, read as '0'. Reset values are shown in hexadecimal.

© 2020 Microchip Technology Inc.

TABLE 34-1: ENHANCED CVD CONTROLLER REGISTER MAP SUMMARY (CONTINUED)

Virtual Address (BF82_#)	Register Name(1)	Bit Range	Bits																POR Values
			31/15	30/14	29/13	28/12	27/11	26/10	25/9	24/8	23/7	22/6	21/5	20/4	19/3	18/2	17/1	16/0	
4124	CVDSD2C2	31:16	SD2TXSTRIDE2<1:0>		SD2TXEND<5:0>						SD2TX-STRIDE1<1:0>		SD2TXBEG<5:0>						0000
		15:0	SD2RXSTRIDE2<1:0>		SD2RXEND<5:0>						SD2RX-STRIDE1<1:0>		SD2RXBEG<5:0>						0000
4128	CVDSD2C3	31:16	SD2EN<1:0>		—	—	SD2BUF	SD2IEN	SD2SELF	SD2MUT	—	—	—	—	CVDEN	CVDCPL<2:0>			0000
		15:0	—	SD2ACQTIME<6:0>							—	SD2CHGTIME<6:0>							0000
412C	CVDSD2T2	31:16	—	SD2POLTIME<6:0>							—	SD2OVRTIME<6:0>							0000
		15:0	—	SD2CHNTIME<6:0>							—	SD2CONTIME<6:0>							0000
4130	CVDSD3C1	31:16	SD3THRESH<31:16>																0000
		15:0	SD3THRESH<7:0>								SD3OVRSAMP<7:0>								0000
4134	CVDSD3C2	31:16	SD3TXSTRIDE2<1:0>		SD3TXEND<5:0>						SD3TX-STRIDE1<1:0>		SD3TXBEG<5:0>						0000
		15:0	SD3RXSTRIDE2<1:0>		SD3RXEND<5:0>						SD3RX-STRIDE1<1:0>		SD3RXBEG<5:0>						0000
4138	CVDSD3C3	31:16	SD3EN<1:0>		—	—	SD3BUF	SD3IEN	SD3SELF	SD3MUT	—	—	—	—	CVDEN	CVDCPL<2:0>			0000
		15:0	—	SD3ACQTIME<6:0>							—	SD3CHGTIME<6:0>							0000
413C	CVDSD3T2	31:16	—	SD3POLTIME<6:0>							—	SD3OVRTIME<6:0>							0000
		15:0	—	SD3CHNTIME<6:0>							—	SD3CONTIME<6:0>							0000

Legend: x = unknown value on Reset; — = unimplemented, read as '0'. Reset values are shown in hexadecimal.

© 2020 Microchip Technology Inc.

REGISTER 34-1: CVDCON: CVD CONTROL REGISTER

Bit Range	Bit 31/23/15/7	Bit 30/22/14/6	Bit 29/21/13/5	Bit 28/20/12/4	Bit 27/19/11/3	Bit 26/18/10/2	Bit 25/17/9/1	Bit 24/16/8/0
31:24	R/W-0	U-0	R/W-0	R/W-0	R/W-0	U-0	W/HC-0	W/HC-0
	ON	—	SIDL	ORDER	SDWREN	—	ABORT	SWTRIG
23:16	R/W-0	U-0	U-0	U-0	R/W-0	R/W-0	R/W-1	R/W-0
	THSTR	—	—	—	CVDIEN	FIFOIEN	FIFOTH<9:8>	
15:8	R/W-0	R/W-0	R/W-0	R/W-0	R/W-0	R/W-0	R/W-0	R/W-0
	FIFOTH<7:0>							
7:0	U-0	U-0	R/W-0	R/W-0	R/W-0	R/W-0	R/W-0	R/W-0
	—	—	CLKSEL<1:0>		TRIGSEL<3:0>			

Legend:	HC = Hardware Cleared	HS = Hardware Set	
R = Readable bit	W = Writable bit	U = Unimplemented bit, read as '0'	
-n = Value at POR	'1' = Bit is set	'0' = Bit is cleared	x = Bit is unknown

bit 31 **ON:** Enables the state machine to scan enabled scan descriptors upon next trigger. Before turning ON from 1'b1 to 1'b0, the Scan Enable bits of all descriptors should be cleared and the ENHANCED CVD controller should either be allowed to finish any scan in progress, or should be instructed to abort the scan with the ABORT bit.

bit 30 **Unimplemented:** Read as '0'

bit 29 **SIDL:** Stop in Idle Mode bit

1 = CVD controller halts when device enters Idle mode
0 = CVD controller continues running in Idle mode

bit 28 **ORDER:** RX/TX Loop Order

1 = Scan all requested TX indexes, then increment RX index and continue
0 = Scan all requested RX indexes, then increment TX index and continue

bit 27 **SDWREN:** Scan Descriptor Write Enable

1 = Enables writes to the scan descriptors
0 = Prevents writes to the scan descriptors

bit 26 **Unimplemented:** Read as '0'

bit 25 **ABORT:**

1 = Abort the current scan

0 = CVD controller continues with the current scan

Note: The controller will move on to the next enabled Scan Descriptor if there is one, else it will go idle. Cleared by hardware.

bit 24 **SWTRIG:** Software Trigger control

1 = Starts scan manually

0 = Continue without the scan

Note: Cleared by hardware.

bit 23 **THSTR:** Threshold Store Mode

1 = Store only results which exceed the programmed threshold for the Scan Descriptor
0 = Store all results in FIFO

bit 22-20 **Unimplemented:** Read as '0'

bit 19 **CVDIEN:** Global Interrupt Enable

1 = Enables the FIFO and scan descriptor interrupts
0 = Disables the FIFO and scan descriptor interrupts

bit 18 **FIFOTHIEN:** FIFO Threshold Interrupt Enable

1 = Controller will assert an interrupt when the FIFO threshold is met
0 = Controller will not assert an interrupt when the FIFO threshold is met

 © 2020 Microchip Technology Inc.

REGISTER 34-1: CVDCON: CVD CONTROL REGISTER (CONTINUED)

bit 17-8 **FIFOTH<9:0>:** Threshold for the results FIFO that will cause an interrupt and watermark FIFOWM status bit assertion.

bit 7-6 **Unimplemented:** Read as '0'

bit 5-4 **CLKSEL<1:0>:** Clock Select for CVD
00 = pB2_clk
01 = FRC
02 = LPRC
03 = REFO1

bit 3-0 **TRIGSEL<3:0>:** Selects one of 15 external trigger inputs to start scanning.
0000 = SFR controlled software trigger
0001 = TMR1 event
0010 = TMR2 event
0011 = TMR3 event
0100 = TMR4 event
0101 = TMR5event
0110 = TMR6 event
0111 = TMR7 event
1000 = Reserved
1001 = Reserved
1010 = PTGO9
1011 =
.
.
.
1111 = Reserved

REGISTER 34-2: CVDADC: CVD ADC CONFIGURATION REGISTER

Bit Range	Bit 31/23/15/7	Bit 30/22/14/6	Bit 29/21/13/5	Bit 28/20/12/4	Bit 27/19/11/3	Bit 26/18/10/2	Bit 25/17/9/1	Bit 24/16/8/0
31:24	U-0	U-0	U-0	U-0	U-0	U-0	U-0	U-0
	—	—	—	—	—	—	—	—
23:16	R/W-0	R/W-0	R/W-0	R/W-0	R/W-0	R/W-0	R/W-0	R/W-0
	—	—	—	—	—	—	—	—
15:8	R/W-0	R/W-0	R/W-0	R/W-0	R/W-0	R/W-0	R/W-0	R/W-0
	—	—	—	—	—	—	—	—
7:0	R/W-0	R/W-0	R/W-0	R/W-0	R/W-0	R/W-0	R/W-0	R/W-0
	—	—	—	—	DIGEN7	DIFFPEN	SELRES<1:0>	

Legend:			
R = Readable bit	W = Writable bit	U = Unimplemented bit, read as '0'	
-n = Value at POR	'1' = Bit is set	'0' = Bit is cleared	x = Bit is unknown

bit 31-4 **Unimplemented:** Read as '0'

bit 3 **DIGEN7:** Shared ADC (ADC2) Digital Enable bit (Differential Mode Select from ADC controller)
1 = ADC2 is digital enabled
0 = ADC2 is digital disabled

bit 2 **DIFFPEN:** Control differential mode operation of ANN0
1= ANN0 (Differential) enabled
0= ANN0 (Differential) disabled

bit 1-0 **SELRES<1:0>:** Shared ADC (ADC2) Resolution bits
11 = 12 bits (default)
10 = 10 bits
01 = 8 bits
00 = 6 bits

Note: Changing the resolution of the ADC does not shift the result in the corresponding ADCDATAx register. The result will still occupy 12 bits, with the corresponding lower unused bits set to '0'. For example, a resolution of 6 bits will result in ADCDATAx<5:0> being set to '0', and ADCDATAx<11:6> holding the result.

 © 2020 Microchip Technology Inc.

REGISTER 34-3: CVDSTAT: CVD STATUS REGISTER

Bit Range	Bit 31/23/15/7	Bit 30/22/14/6	Bit 29/21/13/5	Bit 28/20/12/4	Bit 27/19/11/3	Bit 26/18/10/2	Bit 25/17/9/1	Bit 24/16/8/0
31:24	R-0	R-0	R-0	U-0	U-0	U-0	R-0	R-0
	FIFOFULL	FIFOWM	FIFOMT	—	—	—	FIFOCNT<9:8>	
23:16	R-0	R-0	R-0	R-0	R-0	R-0	R-0	R-1
	FIFOCNT<7:0>							
15:8	U-0	R/W/HS-0	R-0	R-0	U-0	R/W/HS-0	R-0	R-0
	—	SD4INT	SD4DONE	SD4BUSY	—	SD3INT	SD3DONE	SD3BUSY
7:0	U-0	R/W/HS-0	R/W-0	R/W-0	U-0	R/W/HS-0	R-0	R-0
	—	SD2INT	SD2DONE	SD2BUSY	—	SD1INT	SD1DONE	SD1BUSY

Legend:	HC = Hardware Cleared	HS = Hardware Set	
R = Readable bit	W = Writable bit	U = Unimplemented bit, read as '0'	
-n = Value at POR	'1' = Bit is set	'0' = Bit is cleared	x = Bit is unknown

bit 31 **FIFOFULL:** The Results FIFO is full.
1 = FIFO is full.
0 = Not full

bit 30 **FIFOWM:**
1 = FIFO has reached the programmed FIFOTHRESH threshold
0 = FIFO has not reached the programmed FIFOTHRESH threshold

bit 29 **FIFOMT:**
1 = FIFO is empty
0 = FIFO is not empty

bit 28-26 **Unimplemented:** Read as 0

bit 25-16 **FIFOCNT:** Results FIFO word count: Indicates the number of words in the Results FIFO.

bit 15 **Unimplemented:** Read as 0

bit 14 **SD4INT:**
1 = Scan Descriptor 4 has caused an interrupt
0 = Scan Descriptor 4 has not caused an interrupt

bit 13 **SD4DONE:**
1 = Scan Descriptor 4 has completed
0 = Scan Descriptor 4 has not completed

bit 12 **SD4BUSY:**
1 = Scan Descriptor 4 is in progress
0 = Scan Descriptor 4 is not in progress

bit 11 **Unimplemented:** Read as 0

bit 210 **SD3NT:**
1 = Scan Descriptor 3 has caused an interrupt
0 = Scan Descriptor 3 has not caused an interrupt

bit 9 **SD3DONE:** Core will set this bit if Scan Descriptor 3 has completed at least once. Core will clear this bit upon receiving next trigger for Scan Descriptor 3.

bit 8 **SD3BUSY:**
1 = Scan Descriptor 3 is in progress
0 = Scan Descriptor 3 is not in progress

bit 7 **Unimplemented:** Read as 0

bit 6 **SD2NT:**
1 = Scan Descriptor 2 has caused an interrupt
0 = Scan Descriptor 2 has not caused an interrupt

bit 5 **SD2DONE:** Core will set this bit if Scan Descriptor 2 has completed at least once. Core will clear this bit upon receiving next trigger for Scan Descriptor 2.

REGISTER 34-3: CVDSTAT: CVD STATUS REGISTER (CONTINUED)

bit 4 **SD2BUSY:**
1 = Scan Descriptor 2 is in progress
0 = Scan Descriptor 2 is not in progress

bit 3 **Unimplemented:** Read as 0

bit 2 **SD1NT:**
1 = Scan Descriptor 1 has caused an interrupt
0 = Scan Descriptor 1 has not caused an interrupt

bit 1 **SD1DONE:** Core will set this bit if Scan Descriptor 1 has completed at least once. Core will clear this bit upon receiving next trigger for Scan Descriptor 1.

bit 0 **SD1BUSY:**
1 = Scan Descriptor 1 is in progress
0 = Scan Descriptor 1 is not in progress

 © 2020 Microchip Technology Inc.

REGISTER 34-4: CVDRES0H: CVD RESULTS POS FIFO READ REGISTER

Bit Range	Bit 31/23/15/7	Bit 30/22/14/6	Bit 29/21/13/5	Bit 28/20/12/4	Bit 27/19/11/3	Bit 26/18/10/2	Bit 25/17/9/1	Bit 24/16/8/0
31:24	U-0	U-0	U-0	U-0	U-0	U-0	U-0	U-0
	—	—	—	—	—	—	—	—
23:16	U-0	U-0	U-0	U-0	U-0	U-0	U-0	U-0
	—	—	—	—	—	—	—	—
15:8	U-0	U-0	U-0	U-0	R-0	R-0	R-0	R-0
	—	—	—	—	POS<11:8>			
7:0	R-0	R-0	R-0	R-0	R-0	R-0	R-0	R-0
	POS<7:0>							

Legend:			
R = Readable bit	W = Writable bit	U = Unimplemented bit, read as '0'	
-n = Value at POR	'1' = Bit is set	'0' = Bit is cleared	x = Bit is unknown

bit 31-12 **Unimplemented:** Read as '0'

bit 11-0 **POS<11:0>:** The accumulated result of the positive-side measurements Since the controller supports up to 64x oversampling, each polarity can accumulate up to 12 bits.

REGISTER 34-5: CVDRES0L: CVD RESULTS NEG FIFO READ REGISTER

Bit Range	Bit 31/23/15/7	Bit 30/22/14/6	Bit 29/21/13/5	Bit 28/20/12/4	Bit 27/19/11/3	Bit 26/18/10/2	Bit 25/17/9/1	Bit 24/16/8/0
31:24	U-0	U-0	U-0	U-0	U-0	U-0	U-0	U-0
	—	—	—	—	—	—	—	—
23:16	U-0	U-0	U-0	U-0	U-0	U-0	U-0	U-0
	—	—	—	—	—	—	—	—
15:8	U-0	U-0	U-0	U-0	R-0	R-0	R-0	R-0
	—	—	—	—	NEG<11:8>			
7:0	R-0	R-0	R-0	R-0	R-0	R-0	R-0	R-0
	NEG<7:0>							

Legend:			
R = Readable bit	W = Writable bit	U = Unimplemented bit, read as '0'	
-n = Value at POR	'1' = Bit is set	'0' = Bit is cleared	x = Bit is unknown

bit 31-12 **Unimplemented:** Read as '0'

bit 11-0 **NEG<11:0>:** The accumulated result of the negative-side measurements Since the controller supports up to 64x oversampling, each polarity can accumulate up to 12 bits.

 © 2020 Microchip Technology Inc.

REGISTER 34-6: CVDRES0D: CVD RESULTS DESCRIPTOR FIFO READ REGISTER

Bit Range	Bit 31/23/15/7	Bit 30/22/14/6	Bit 29/21/13/5	Bit 28/20/12/4	Bit 27/19/11/3	Bit 26/18/10/2	Bit 25/17/9/1	Bit 24/16/8/0
31:24	R-0	R-0	R-0	R-0	R-0	U-0	R-0	R-0
	TXINDEX<4:0>					—	SDNUM<1:0>	
23:16	R-0	R-0	R-0	R-0	R-0	U-0	R-0	R-0
	RXINDEX<4:0>					—	DELTA<17:16>	
15:8	R-0	R-0	R-0	R-0	R-0	R-0	R-0	R-0
	DELTA<15:8>							
7:0	R-0	R-0	R-0	R-0	R-0	R-0	R-0	R-0
	DELTA<7:0>							

Legend:			
R = Readable bit	W = Writable bit	U = Unimplemented bit, read as '0'	
-n = Value at POR	'1' = Bit is set	'0' = Bit is cleared	x = Bit is unknown

bit 31-27 **TXINDEX<4:0>:** Transmit Index for this result. If the Stride of the Scan Descriptor was more than one, the Transmit Index indicates the first one of the group.

bit 26 **Unimplemented:** Read as '0'

bit 25-24 **SDNUM:** Scan Descriptor Number that generated this result

bit 23-19 **RXINDEX<4:0>:** Receive Index for this result. If the Stride of the Scan Descriptor was more than one, the Receive Index indicates the first one of the group.

bit 18 **Unimplemented:** Read as '0'

bit 17-0 **DELTA<17:0>:** The delta of the accumulated results of the negative-side and positive-side measurements. Since the controller supports up to 64x oversampling, each polarity can accumulate up to 12 bits.

Note: Reading this register increments the FIFO read pointer, destroying the data in the previous two registers for NEG and POS absolute values. If the NEG and POS values are desired, those registers should be read BEFORE this one. If the absolute values are not required, bandwidth can be saved by reading only this descriptor register.

REGISTER 34-7: CVDRxN: CVD RECEIVE INDEX N CONFIGURATION n = 0-3

Bit Range	Bit 31/23/15/7	Bit 30/22/14/6	Bit 29/21/13/5	Bit 28/20/12/4	Bit 27/19/11/3	Bit 26/18/10/2	Bit 25/17/9/1	Bit 24/16/8/0
31:24	U-0	U-0	R/W-0	R/W-0	R/W-0	R/W-0	R/W-0	R/W-0
	—	—	$RXAN_{(4n+3)}$<5:0>					
23:16	U-0	U-0	R/W-0	R/W-0	R/W-0	R/W-0	R/W-0	R/W-0
	—	—	$RXAN_{(4n+2)}$<5:0>					
15:8	U-0	U-0	R/W-0	R/W-0	R/W-0	R/W-0	R/W-0	R/W-0
	—	—	$RXAN_{(4n+1)}$<5:0>					
7:0	U-0	U-0	R/W-0	R/W-0	R/W-0	R/W-0	R/W-0	R/W-0
	—	—	$RXAN_{(4n+0)}$<5:0>					

Legend:			
R = Readable bit	W = Writable bit	U = Unimplemented bit, read as '0'	
-n = Value at POR	'1' = Bit is set	'0' = Bit is cleared	x = Bit is unknown

bit 31-30 **Unimplemented:** Read as '0'
bit 29-24 **RXAN[4n+3][5:0]:** ANx/CVDR channel to use for RX Index 4n+3
bit 23-22 **Unimplemented:** Read as '0'
bit 21-16 **RXAN[4n+2][5:0]:** ANx/CVDR channel to use for RX Index 4n+2
bit 15-14 **Unimplemented:** Read as '0'
bit 13-8 **RXAN[4n+1][5:0]:** ANx/CVDR channel to use for RX Index 4n+1
bit 7-6 **Unimplemented:** Read as '0'
bit 5-0 **RXAN[4n+0][5:0]:** ANx/CVDR channel to use for RX Index 4n+0

 © 2020 Microchip Technology Inc.

REGISTER 34-8: CVDTXn: CVD TRANSMIT INDEX n CONFIG n = 0-3

Bit Range	Bit 31/23/15/7	Bit 30/22/14/6	Bit 29/21/13/5	Bit 28/20/12/4	Bit 27/19/11/3	Bit 26/18/10/2	Bit 25/17/9/1	Bit 24/16/8/0
31:24	U-0	U-0	R/W-0	R/W-0	R/W-0	R/W-0	R/W-0	R/W-0
	—	—	$TXAN_{(4n+3)}$<5:0>					
23:16	U-0	U-0	R/W-0	R/W-0	R/W-0	R/W-0	R/W-0	R/W-0
	—	—	$TXAN_{(4n+2)}$<5:0>					
15:8	U-0	U-0	R/W-0	R/W-0	R/W-0	R/W-0	R/W-0	R/W-0
	—	—	$TXAN_{(4n+1)}$<5:0>					
7:0	U-0	U-0	R/W-0	R/W-0	R/W-0	R/W-0	R/W-0	R/W-0
	—	—	$TXAN_{(4n+0)}$<5:0>					

Legend:			
R = Readable bit	W = Writable bit	U = Unimplemented bit, read as '0'	
-n = Value at POR	'1' = Bit is set	'0' = Bit is cleared	x = Bit is unknown

bit 31-30 **Unimplemented:** Read as '0'
bit 29-24 **TXAN[4n+3][5:0]:** ANx/CVDR channel to use for TX Index 4n+3
bit 23-22 **Unimplemented:** Read as '0'
bit 21-16 **TXAN[4n+2][5:0]:** ANx/CVDR channel to use for TX Index 4n+2
bit 15-14 **Unimplemented:** Read as '0'
bit 13-8 **TXAN[4n+1][5:0]:** ANx/CVDR channel to use for TX Index 4n+1
bit 7-6 **Unimplemented:** Read as '0'
bit 5-0 **TXAN[4n+0][5:0]:** ANx/CVDR channel to use for TX Index 4n+0

REGISTER 34-9: CVDSDnC1: CVD SCAN DESCRIPTOR n CONTROL 1, n = 0-3

Bit Range	Bit 31/23/15/7	Bit 30/22/14/6	Bit 29/21/13/5	Bit 28/20/12/4	Bit 27/19/11/3	Bit 26/18/10/2	Bit 25/17/9/1	Bit 24/16/8/0
31:24	R/W-0	R/W-0	R/W-0	R/W-0	R/W-0	R/W-0	R/W-0	R/W-0
	SDnTH<23:16>							
23:16	R/W-0	R/W-0	R/W-0	R/W-0	R/W-0	R/W-0	R/W-0	R/W-0
	SDnTH<15:8>							
15:8	R/W-0	R/W-0	R/W-0	R/W-0	R/W-0	R/W-0	R/W-0	R/W-0
	SDnTH<7:0>							
7:0	R/W-0	R/W-0	R/W-0	R/W-0	R/W-0	R/W-0	R/W-0	R/W-0
	SDnOVRSAMP<7:0>							

Legend:			
R = Readable bit	W = Writable bit	U = Unimplemented bit, read as '0'	
-n = Value at POR	'1' = Bit is set	'0' = Bit is cleared	x = Bit is unknown

bit 31-8 **SDnTH<23:0>:** Scan Descriptor Threshold

The accumulators are subtracted after all oversampling is completed. The result of that subtraction is compared to this threshold to generate an interrupt and/or store data to the FIFO based on the configuration.

bit 7-0 **SDnOVRSAMP<7:0>:** Scan Descriptor Over Sampling

Determines the amount of oversampling done on each measurement.

0 = Only one measurement

1 = Two measurements accumulated

255 = 256 measurements accumulated

 © 2020 Microchip Technology Inc.

REGISTER 34-10: CVDSDnC2: CVD SCAN DESCRIPTOR n CONTROL 2, n = 0-3

Bit Range	Bit 31/23/15/7	Bit 30/22/14/6	Bit 29/21/13/5	Bit 28/20/12/4	Bit 27/19/11/3	Bit 26/18/10/2	Bit 25/17/9/1	Bit 24/16/8/0
31:24	R/W-0	R/W-0	R/W-0	R/W-0	R/W-0	R/W-0	R/W-0	R/W-0
	SDnTXSTRIDE<3:2>		SDnTXEND<5:0>					
23:16	R/W-0	R/W-0	R/W-0	R/W-0	R/W-0	R/W-0	R/W-0	R/W-0
	SDnTXSTRIDE<1:0>		SDnTXBEG<5:0>					
15:8	R/W-0	R/W-0	R/W-0	R/W-0	R/W-0	R/W-0	R/W-0	R/W-0
	SDnTXSTRIDE<3:2>		SDnRXEND<5:0>					
7:0	R/W-0	R/W-0	R/W-0	R/W-0	R/W-0	R/W-0	R/W-0	R/W-0
	SDnTXSTRIDE<1:0>		SDnRXBEG<5:0>					

Legend:			
R = Readable bit	W = Writable bit	U = Unimplemented bit, read as '0'	
-n = Value at POR	'1' = Bit is set	'0' = Bit is cleared	x = Bit is unknown

bit 31-30 **SDnTXSTRIDE<3:2>:** Scan Descriptor TX Index Stride
Determines the number of TX Indexes included in a single measurement.
4'h0: One TX Index
4'bF: 16TX Indexes

bit 29-24 **SDnTXEND<5:0>:** Scan Descriptor TX Index End
Determines the last TX index to include in a scan. One the TX index pointer, which is incremented by the SDnTXSTRIDE+1 value, meets or exceeds this value, the TX loop of the scan is complete.

bit 23-22 **SDnRXSTRIDE<3:2>:** Scan Descriptor TX Index Stride
Determines the number of TX Indexes included in a single measurement.
4'h0: One TX Index
4'bF: 16TX Indexes

bit 21-16 **SDnTXBEG<5:0>:** Scan Descriptor TX Index Start
Determines the first TX index to include in a scan.

bit 15-14 **SDnRXSTRIDE<3:2>:** Scan Descriptor RX Index Stride
Determines the number of TX Indexes included in a single measurement.
4'h0: One TX Index
4'bF: 16TX Indexes

bit 13-8 **SDnRXEND<5:0>:** Scan Descriptor RX Index End
Determines the last RX index to include in a scan. One the RX index pointer, which is incremented by the SDnRXSTRIDE+1 value, meets or exceeds this value, the RX loop of the scan is complete.

bit 7-6 **SDnRXSTRIDE<1:0>:** Scan Descriptor RX Index Stride
Determines the number of RX Indexes included in a single measurement.
4'h0: One RX Index
4'hF: 16 TX Indexes

bit 5-0 **SDnRXBEG<5:0>:** Scan Descriptor RX Index Start
Determines the first RX index to include in a scan.

REGISTER 34-11: CVDSDnC3: CVD SCAN DESCRIPTOR n CONTROL 3, n = 0-3

Bit Range	Bit 31/23/15/7	Bit 30/22/14/6	Bit 29/21/13/5	Bit 28/20/12/4	Bit 27/19/11/3	Bit 26/18/10/2	Bit 25/17/9/1	Bit 24/16/8/0
31:24	R/W/HC-0	R/W/HC-0	U-0	U-0	R/W-0	R/W-0	R/W-0	R/W-0
	SDnEN[1:0]		—	—	SDnBUF	SDnINTEN	SDnSELF	SDnMUT
23:16	R/W-0	R/W-0	R/W-0	R/W-0	R/W-0	R/W-0	R/W-0	R/W-0
	—	—	—	—	CVDEN	CVDCPL<2:0>		
15:8	U-0	R/W-0	R/W-0	R/W-0	R/W-0	R/W-0	R/W-0	R/W-0
	—	SDnACQTIME<6:0>						
7:0	U-0	R/W-0	R/W-0	R/W-0	R/W-0	R/W-0	R/W-0	R/W-0
	—	SDnCHGTIME<6:0>						

Legend:	HC = Hardware Cleared	HS = Hardware Set	
R = Readable bit	W = Writable bit	U = Unimplemented bit, read as '0'	
-n = Value at POR	'1' = Bit is set	'0' = Bit is cleared	x = Bit is unknown

bit 31-30 **SDnEN<1:0>:** Scan Descriptor Enable Mode
00 = Scan Descriptor Disabled
01 = Execute Scan Descriptor one time only, then clear the enable.
10 = Execute the Scan Descriptor, but keep enabled. Move on to next enabled descriptors.
11 = Execute the Scan Descriptor in a loop until a threshold match is detected, then clear the enable and move on to next enabled descriptors.

bit 29-28 **Unimplemented:** Read as '0'

bit 27 **SDnBUF:** Scan Descriptor CVD Buffer Enable
1 = CVD buffer output used as shared ADC (ADC2) input.
0 = CVD buffer output not used as shared ADC (ADC2) input

bit 26 **SDnINTEN:** Scan Descriptor Interrupt Enable
1 = Scan Descriptor creates an interrupt if the accumulator threshold is met
0 = Scan descriptor does not create an interrupt

bit 25 **SDnSELF:** Scan Descriptor Mutual Mode
1 = Self Measurement Mode; RX outputs are part of CVD measurement and are driven
0 = No Self Measurement; RX outputs are not part of CVD measurements

bit 24 **SDnMUT:** Scan Descriptor Mutual Mode
1 = Mutual Measurement Mode; TX outputs are part of CVD measurement and are driven
0 = No Mutual Measurement Mode; TX outputs are not part of CVD measurements

bit 23-20 **Unimplemented:** Read as '0'

bit 19 **CVDEN:** Capacitive Voltage Division Enable bit
1 = CVD operation is enabled
0 = CVD operation is disabled

bit 18-16 **CVDCPL<2:0>:** Capacitor Voltage Divider (CVD) Setting bits
111 = 7 * 2.5 pF = 17.5 pF
110 = 6 * 2.5 pF = 15 pF
101 = 5 * 2.5 pF = 12.5 pF
100 = 4 * 2.5 pF = 10 pF
011 = 3 * 2.5 pF = 7.5 pF
010 = 2 * 2.5 pF = 5 pF
001 = 1 * 2.5 pF = 2.5 pF
000 = 0 * 2.5 pF = 0 pF

bit 15 **Unimplemented:** Read as '0'

bit 14-8 **SDnACQTIME<6:0>:** Scan Descriptor Acquire Time
Time for which CVD waits for ADC voltage to settle.

bit 7 **Unimplemented:** Read as '0'

 © 2020 Microchip Technology Inc.

REGISTER 34-11: CVDSDnC3: CVD SCAN DESCRIPTOR n CONTROL 3, n = 0-3 (CONTINUED)

bit 6-0 **SDnCHGTIME<6:0>:** Scan Descriptor Charge Time
Time for which CVD remains in the charging state for internal/external capacitors and for TX outputs.

REGISTER 34-12: CVDSDnT2: CVD SCAN DESCRIPTOR n TIME 2, n = 1-4

Bit Range	Bit 31/23/15/7	Bit 30/22/14/6	Bit 29/21/13/5	Bit 28/20/12/4	Bit 27/19/11/3	Bit 26/18/10/2	Bit 25/17/9/1	Bit 24/16/8/0
31:24	U-0	R/W-0	R/W-0	R/W-0	R/W-0	R/W-0	R/W-0	R/W-0
	—	SDnPOLTIME<6:0>						
23:16	U-0	R/W-0	R/W-0	R/W-0	R/W-0	R/W-0	R/W-0	R/W-0
	—	SDnOVRTIME<6:0>						
15:8	U-0	U-0	U-0	U-0	U-0	U-0	U-0	U-0
	—	SDnCHNTIME<6:0>						
7:0	U-0	R/W-0	R/W-0	R/W-0	R/W-0	R/W-0	R/W-0	R/W-0
	—	SDnCONTIME<6:0>						

Legend:			
R = Readable bit	W = Writable bit	U = Unimplemented bit, read as '0'	
-n = Value at POR	'1' = Bit is set	'0' = Bit is cleared	x = Bit is unknown

bit 31 **Unimplemented:** Read as '0'

bit 30-24 **SDnPOLTIME<6:0>:** Scan Descriptor Polarity Time

Controls the number of cycles the state machine waits in the POLARITY state before taking the second polarity measurement of an RX/TX pair

bit 23 **Unimplemented:** Read as '0'

bit 22-16 **SDnOVRTIME<6:0>:** Scan Descriptor Oversample Time

Controls the number of cycles the state machine waits in the OVERSAMP state before taking the next oversampling measurement of an RX/TX pair.

bit 15 **Unimplemented:** Read as '0'

bit 14-8 **SDnCHNTIME<6:0>:** Scan Descriptor Channel Time

Controls the number of cycles the state machine waits in the RXCHAN or TXCHAN state before moving to the next RX/TX pair.

bit 7 **Unimplemented:** Read as '0'

bit 6-0 **SDnCONTIME<6:0>:** Scan Descriptor Charge Time

Controls the number of cycles the state machine waits in the CONVERT state waiting for the ADC sample data. It must be ensured that the ADC will assert End-Of-Convert (EOC) before the CONVERT state timer expires.

 © 2020 Microchip Technology Inc.

 © 2020 Microchip Technology Inc.

35.0 POWER MANAGEMENT UNIT (PMU)

This section describes PMU features of the PIC32MZ W1 devices. These devices offer various method to monitor and program the MLDO and provides unified control to various LDOs present in the device.

Key features of PMU include:

- Provides IO mapped SPI interface for programming MLDO.
- Controls LDOs of the peripherals and voltage reference PLL regulator output voltage for optimal performance for various devices operating mode.
- Provides register locking feature to avoid accidental writes to the critical PMU control registers.
- Provides WOFF mode and WCM retention mode to support Power-Saving modes.
- Maintain Wi-Fi Context Memory (WCM) and provides memory mapped CPU access over fast peripheral bus.

35.1 PMU Controller Registers

TABLE 35-1: PMU CONTROLLER REGISTER MAP

Virtual Address (BF81_#)	Register Name(1)	Bit Range	Bits																All Resets
			31/15	30/14	29/13	28/12	27/11	26/10	25/9	24/8	23/7	22/6	21/5	20/4	19/3	18/2	17/1	16/0	
3E00	PMUSPICTRL	31:16	SPIRST(1)	PMUCRST(1)	—	—	—	—	—	CMD	SPIADDR<7:0>								0000
		15:0	SPIWDATA<15:0>																0000
3E04	PMUSPISTAT	31:16	SPIRDATA<15:0>																0000
		15:0	SPIRADDR<7:0>								SPIRDY	—	—	—	—	—	—	SPIERR	0000
3E08	PMUCLKCTRL	31:16	WCM-RET(1)	WLDOOFF(1)	—	—	—	—	—	—	—	—	—	—	—	—	—	—	0000
		15:0	—	—	—	—	—	—	—	—	SPISRC<1:0>(1)		SPICLKDIV<5:0>(1)						2888
3E0C	PMUMODECTRL1(1)	31:16	—	MLDOEN	—	VREG1CTRL<4:0>					—	—	—	VREG2CTRL<4:0>					3000
		15:0	—	—	—	VREG3CTRL<4:0>					—	—	—	VREG4CTRL<4:0>					0000
3E10	PMUMODECTRL2(1)	31:16	—	MLDOEN	—	VREG1CTRL<4:0>					—	—	—	VREG2CTRL<4:0>					4000
		15:0	—	—	—	VREG3CTRL<4:0>					—	—	—	VREG4CTRL[4-0]					0000
3E14	PMUMODECTRL3(1)	31:16	—	MLDOEN	—	VREG1CTRL<4:0>					—	—	—	VREG2CTRL<4:0>					4000
		15:0	—	—	—	VREG3CTRL<4:0>					—	—	—	VREG4CTRL<4:0>					0000
3E18	PMUMODECTRL4(1)	31:16	—	MLDOEN	—	VREG1CTRL<4:0>					—	—	—	VREG2CTRL<4:0>					8000
		15:0	—	—	—	VREG3CTRL<4:0>					—	—	—	VREG4CTRL<4:0>					0000
3E1C	PMUOVERCTRL	31:16	—	—	—	—	—	—	—	—	—	PHWC(1)	—	—	—	—	—	—	0040
		15:0	—	—	—	—	—	—	—	—	—	—	—	—	—	—	—	—	0000
3E20	PMUCMODE	31:16	—	CMLDOEN	—	CVREG1OCTRL<4:0>					—	—	—	CVREG2OCTRL<4:0>					4000
		15:0	—	—	—	CVREG3OCTRL<4:0>					—	—	—	CVREG4OCTRL<4:0>					0000
3E24	PMUSTATUS	31:16	BSSERR	—	—	—	—	—	—	—	—	—	—	—	—	—	—	—	0000
		15:0	—	—	—	—	—	—	—	—	—	—	WCMRM	—	—	—	—	—	0000
3E28	PMUSEQ0	31:16	SPIDATA<15:0>																xxxx
		15:0	SPIADDR<7:0>								CMD	CMPBAL	DELAY<5:0>						xxxx
3E2C	PMUSEQ1	31:16	SPIDATA<15:0>																xxxx
		15:0	SPIADDR<7:0>								CMD	CMPBVAL	DELAY<5:0>						xxxx
3E30	PMUSEQ2	31:16	SPIDATA<15:0>																xxxx
		15:0	SPIADDR<7:0>								CMD	CMPBVAL	DELAY<5:0>						xxxx

Legend: x = unknown value on Reset; — = unimplemented, read as '0'. Reset values are shown in hexadecimal.

Note 1: These register bits are only writable when PMULOCK Configuration (CFGCON0<10>) bit is 0.

© 2020 Microchip Technology Inc.

TABLE 35-1: PMU CONTROLLER REGISTER MAP (CONTINUED)

Virtual Address (BF81_#)	Register Name(1)	Bit Range	Bits																All Resets
			31/15	30/14	29/13	28/12	27/11	26/10	25/9	24/8	23/7	22/6	21/5	20/4	19/3	18/2	17/1	16/0	
3E38	PMUCFG	31:16	—	—	—	—	—	—	—	—	—	—	—	—	—	—	—	—	0000
		15:0	—	—	—	—	—	—	—	—	—	—	DELAY<5:0>						00xx
3E3C	PMUWCMCMD	31:16	MODE	CMD	—	WCMRDY	—	—	—	—	—	—	—	—	—	WCMCLKDIV<2:0>			1004
		15:0	—	—	—	—	—	WCMADDR<10:0>											0000
3E40	PMUWCMWDATA	31:16	WDATA<31:16>																0000
		15:0	WDATA<15:0>																0000
3E44	PMUWCMRDATA	31:16	RDATA<31:16>																0000
		15:0	RDATA<15:0>																0000

Legend: x = unknown value on Reset; — = unimplemented, read as '0'. Reset values are shown in hexadecimal.

Note 1: These register bits are only writable when PMULOCK Configuration (CFGCON0<10>) bit is 0.

© 2020 Microchip Technology Inc.

REGISTER 35-1: PMUSPICTRL: PMU SPI CONTROL REGISTER

Bit Range	Bit 31/23/15/7	Bit 30/22/14/6	Bit 29/21/13/5	Bit 28/20/12/4	Bit 27/19/11/3	Bit 26/18/10/2	Bit 25/17/9/1	Bit 24/16/8/0
31:24	R/W/L/HC-0	R/W/L/HC-0	U-0	U-0	U-0	U-0	U-0	R/W/L-0
	SPIRST	PMUCRST	—	—	—	—	—	CMD
23:16	R/W - 0	R/W - 0	R/W - 0	R/W - 0	R/W - 0	R/W - 0	R/W - 0	R/W - 0
	SPIADDR<7:0>							
15:8	R/W - 0	R/W - 0	R/W - 0	R/W - 0	R/W - 0	R/W - 0	R/W - 0	R/W - 0
	SPIWDATA<15:8>							
7:0	R/W - 0	R/W - 0	R/W - 0	R/W - 0	R/W - 0	R/W - 0	R/W - 0	R/W - 0
	SPIWDATA<7:0>							

Legend:	HC = Hardware Set	HS = Hardware Cleared	L = Lockable bit
R = Readable bit	W = Writable bit	U = Unimplemented bit, read as '0'	
-n = Value at POR	'1' = Bit is set	'0' = Bit is cleared	x = Bit is unknown

bit 31 **SPIRST:** PMU SPI Register Chain Reset bit
1 = Asserts Reset to PMU module which in turn resets the SPI registers. Automatically cleared in hardware.
0 = No effect

Note: This bit must be enabled only when PMUSPISTATUS.SPIRDY = 1.

bit 30 **PMUCRST:** PMU Controller Soft Reset bit
1 = Asserts Reset to PMU controller SPI FSM. Automatically cleared in hardware.
0 = No effect

Note: This bit must be enabled only when PMUSPISTATUS.SPIRDY = 1.

bit 29-25 **Unimplemented:** Read as '0'

bit 24 **CMD:** SPI Command bit
1 = SPI read command
0 = SPI write command

bit 23-16 **SPIADDR<7:0>:** 8-bit SPI Address bit

bit 5-0 **SPIWDATA<15:0>:** 16-bit SPI Write Data bit

 © 2020 Microchip Technology Inc.

REGISTER 35-2: PMUSPISTAT: PMU SPI CONTROL REGISTER

Bit Range	Bit 31/23/15/7	Bit 30/22/14/6	Bit 29/21/13/5	Bit 28/20/12/4	Bit 27/19/11/3	Bit 26/18/10/2	Bit 25/17/9/1	Bit 24/16/8/0
31:24	R-0	R-0	R-0	R-0	R-0	R-0	R-0	R-0
	SPIRDATA<15:8>							
23:16	R-0	R-0	R-0	R-0	R-0	R-0	R-0	R-0
	SPIRDATA<7:0>							
15:8	R-0	R-0	R-0	R-0	R-0	R-0	R-0	R-0
	SPIRADDR<7:0>							
7:0	R-1	U-0	U-0	U-0	U-0	U-0	U-0	R - 0
	SPIRDY	—	—	—	—	—	—	SPIERR

Legend:			
R = Readable bit	W = Writable bit	U = Unimplemented bit, read as '0'	
-n = Value at POR	'1' = Bit is set	'0' = Bit is cleared	x = Bit is unknown

bit 31-16 **SPIRDATA<15:0>:** SPI Read Data. Valid only if SPIRDY = 1.

bit 15-8 **SPIRADDR<7:0>:** SPI Read Address. Valid only if PMUSPICTRL.CMD = 0 and SPIRDY = 1.

bit 7 **SPIRDY:** SPI Ready Flag
1 = SPI transaction is complete or PMU Controller is ready for next SPI command.
0 = SPI transaction in progress or PMU controller is busy.

Note: A write to PMUSPICTRL register is ignored if SPIRDY = 0. Software must confirm SPRDY = 1 before posting a read or write transaction to the PMU via a write to PMUSPICTRL register.

bit 6-1 **Unimplemented:** 0

bit 0 **SPIERR:** SPI Command Terminated With Error bit
1 = SPI transaction is terminated
0 = No termination and next command can be applied.

Note 1: SPIERR status is ignored if SPIRDY = 0. Software must confirm SPIERR = 0 before acknowledging command completion or commencing next transaction.

2: A write to PMUSPICTRL register is ignored if SPIERR = 1. Software must confirm SPIERR = 0 before posting a read or write transaction to the PMU via a write to PMUSPICTRL register.

REGISTER 35-3: PMUCLKCTRL: PMU CLOCK CONTROL REGISTER

Bit Range	Bit 31/23/15/7	Bit 30/22/14/6	Bit 29/21/13/5	Bit 28/20/12/4	Bit 27/19/11/3	Bit 26/18/10/2	Bit 25/17/9/1	Bit 24/16/8/0
31:24	R/W/L-0	R/W/L-0	U-0	U-0	U-0	U-0	U-0	U-0
	WCMRET	WLDOOFF	—	—	—	—	—	—
23:16	U-0	U-0	U-0	U-0	U-0	U-0	U-0	R/W/L-0
	—	—	—	—	—	—	—	—
15:8	U-0	U-0	U-0	U-0	U-0	U-0	U-0	U-0
	—	—	—	—	—	—	—	—
7:0	R/W/L-1	R/W/L-0	R/W/L-0	R/W/L-0	R/W/L-1	R/W/L-0	R/W/L-0	R/W/L-0
	SPISRC<1:0>		SPICLKDIV<5:0>					

Legend:			
R = Readable bit	W = Writable bit	U = Unimplemented bit, read as '0'	
-n = Value at POR	'1' = Bit is set	'0' = Bit is cleared	L = Lockable bit

bit 31 **WCMRET:** Wi-Fi Context Memory Retention Mode bit
1 = WCM is kept in Retention mode in Sleep mode
0 = WCM in Normal mode

bit 30 **WLDOOFF:** Wi-Fi LDO Control bit
1 = WLDO is turned OFF in Sleep mode
0 = WLDO is kept ON in Sleep mode

bit 29-16 **Unimplemented:** Read as '0'

bit 15-8 **Unimplemented:** Read as '0'

bit 7-6 **SPISRC<1:0>:** SPI Clock Selection bit

bit 5-0 **SPICLKDIV<5:0>:** SPI Clock Divider bit
n = SPI clock = SPISRC clock/n -- default = 0x02
1 = Invalid (functionality is not guaranteed)
0 = Clock disabled (if programmed 0 then SPIRDY forced to 0 to defer the CPU from posting SPI transaction.

Note 1: Maximum SPI clock = System Clock / 2 but capped at 20MHz gated by PMU SPI speed.

 © 2020 Microchip Technology Inc.

REGISTER 35-4: PMUMODECTRL(N): PMU MODE CONTROL REGISTER, WHERE N = 1 TO 4

Bit Range	Bit 31/23/15/7	Bit 30/22/14/6	Bit 29/21/13/5	Bit 28/20/12/4	Bit 27/19/11/3	Bit 26/18/10/2	Bit 25/17/9/1	Bit 24/16/8/0
31:24	U-0	R/W/L-0	U-0	R/W/L-0	R/W/L-0	R/W/L-0	R/W/L-0	R/W/L-0
	—	MLDOEN	—	VREG1CTRL<4:0>				
23:16	U-0	U-0	U-0	R/W/L-0	R/W/L-0	R/W/L-0	R/W/L-0	R/W/L-0
	—	—	—	VREG1CTRL<4:0>				
15:8	U-0	U-0	U-0	R/W/L-0	R/W/L-0	R/W/L-0	R/W/L-0	R/W/L-0
	—	—	—	VREG1CTRL<4:0>				
7:0	U-0	U-0	U-0	R/W/L-0	R/W/L-0	R/W/L-0	R/W/L-0	R/W/L-0
	—	—	—	VREG1CTRL<4:0>				

Legend:			
R = Readable bit	W = Writable bit	U = Unimplemented bit, read as '0'	
-n = Value at POR	'1' = Bit is set	'0' = Bit is cleared	L = Lockable bit

bit 31 **Unimplemented:** Read as '0'

bit 30 **MLDOEN:** MLDO Enable Register bit
1 = MLDO enabled
0 = MLDO disabled

Note: This bit is only writable when CFGCON0.PMULOCK = 0.

bit 29 **Unimplemented:** Read as '0'

bit 28-24 **VREG1CTRL<4:0>:** VREG1 Output Voltage Control bit

Note: This field is only writable when CFGCON0.PMULOCK = 0.

bit 23-21 **Unimplemented:** Read as '0

bit 20-16 **VREG1CTRL<4:0>:** VREG2 Output Voltage Control bit

Note: This field is only writable when CFGCON0.PMULOCK = 0.

bit 15-13 **Unimplemented:** Read as '0

bit 12-8 **VREG1CTRL<4:0>:** VREG3 Output Voltage Control bit

Note: This field is only writable when CFGCON0.PMULOCK = 0.

bit 7-5 **Unimplemented:** Read as '0

bit 4-0 **VREG1CTRL<4:0>:** VREG4 Output Voltage Control bit

Note: This field is only writable when CFGCON0.PMULOCK = 0.

REGISTER 35-5: PMUOVERCTRL: PMU OVERRIDE CONTROL REGISTER

Bit Range	Bit 31/23/15/7	Bit 30/22/14/6	Bit 29/21/13/5	Bit 28/20/12/4	Bit 27/19/11/3	Bit 26/18/10/2	Bit 25/17/9/1	Bit 24/16/8/0
31:24	U-0	U-0	U-0	U-0	U-0	U-0	U-0	U-0
	—	—	—	—	—	—	—	—
23:16	U-0	R/W/L-1	U-0	U-0	U-0	U-0	U-0	U-0
	—	PHWC	—	—	—	—	—	—
15:8	U-0	U-0	U-0	U-0	U-0	U-0	U-0	U-0
	—	—	—	—	—	—	—	—
7:0	U-0	U-0	U-0	U-0	U-0	U-0	U-0	U-0
	—	—	—	—	—	—	—	—

Legend:			
R = Readable bit	W = Writable bit	U = Unimplemented bit, read as '0'	
-n = Value at POR	'1' = Bit is set	'0' = Bit is cleared	L = Lockable bit

bit 31-23 **Unimplemented:** Read as '0'

bit 22 **PHWC:** Power-up Hardware Control Enable
1 = Enabled
0 = Disabled

bit 21-0 **Unimplemented:** Read as '0'

 © 2020 Microchip Technology Inc.

REGISTER 35-6: PMUCMODE: PMU CURRENT MODE REGISTER

Bit Range	Bit 31/23/15/7	Bit 30/22/14/6	Bit 29/21/13/5	Bit 28/20/12/4	Bit 27/19/11/3	Bit 26/18/10/2	Bit 25/17/9/1	Bit 24/16/8/0
31:24	U-0	R-1	U-0	R-0	R-0	R-0	R-0	R-0
	—	CMLDOEN	—	CVREG1OCTRL<4:0>				
23:16	U-0	U-0	U-0	R-0	R-0	R-0	R-0	R-0
	—	—	—	CVREG2OCTRL<4:0>				
15:8	U-0	U-0	U-0	R-0	R-0	R-0	R-0	R-0
	—	—	—	CVREG3OCTRL<4:0>				
7:0	U-0	U-0	U-0	R-0	R-0	R-0	R-0	R-0
	—	—	—	CVREG4OCTRL<4:0>				

Legend:			
R = Readable bit	W = Writable bit	U = Unimplemented bit, read as '0'	
-n = Value at POR	'1' = Bit is set	'0' = Bit is cleared	x = Bit is unknown

bit 31 **Unimplemented:** Read as '0'

bit 30 **CMLDOEN:** MLDO Enable Status Register bit
1 = MLDO enabled
0 = MLDO disabled

bit 29 **Unimplemented:** Read as '0'

bit 28-24 **CVREG1OCTRL<4:0>:** VREG1 output voltage control status

bit 23-21 **Unimplemented:** Read as '0'

bit 20-15 **CVREG2OCTRL<4:0>:** VREG2 output voltage control status

bit 15-13 **Unimplemented:** Read as '0'

bit 12-8 **CVREG3OCTRL<4:0>:** VREG3 output voltage control status

bit 7-5 **Unimplemented:** Read as '0'

bit 4-0 **CVREG4OCTRL<4:0>:** VREG4 output voltage control status

REGISTER 35-7: PMUSTATUS: PMU STATUS REGISTER

Bit Range	Bit 31/23/15/7	Bit 30/22/14/6	Bit 29/21/13/5	Bit 28/20/12/4	Bit 27/19/11/3	Bit 26/18/10/2	Bit 25/17/9/1	Bit 24/16/8/0
31:24	U-0	U-0	U-0	U-0	U-0	U-0	U-0	U-0
	—	—	—	—	—	—	—	—
23:16	U-0	U-0	U-0	U-0	U-0	U-0	U-0	U-0
	—	—	—	—	—	—	—	—
15:8	U-0	U-0	U-0	U-0	U-0	U-0	U-0	U-0
	—	—	—	—	—	—	—	—
7:0	U-0	U-0	R-0	U-0	U-0	U-0	U-0	U-0
	—	—	WCMRM	—	—	—	—	—

Legend:			
R = Readable bit	W = Writable bit	U = Unimplemented bit, read as '0'	
-n = Value at POR	'1' = Bit is set	'0' = Bit is cleared	x = Bit is unknown

bit 31-6 **Unimplemented:** Read as '0'

bit 5 **WCMRM:** WCM has entered or begin to enter the retention mode. Accesses are blocked.
1 = WCM in Retention mode or beginning to enter the retention mode. Accesses are blocked.
0 = WCM out of Retention mode and can be accessed.

bit 4-0 **Unimplemented:** Read as '0'

 © 2020 Microchip Technology Inc.

REGISTER 35-8: PMUSEQ(n): PMU SEQUENCE REGISTER

Bit Range	Bit 31/23/15/7	Bit 30/22/14/6	Bit 29/21/13/5	Bit 28/20/12/4	Bit 27/19/11/3	Bit 26/18/10/2	Bit 25/17/9/1	Bit 24/16/8/0
31:24	R-cfg	R-cfg	R-cfg	R-cfg	R-cfg	R-cfg	R-cfg	R-cfg
	SPIDATA<15:8>							
23:16	R-cfg	R-cfg	R-cfg	R-cfg	R-cfg	R-cfg	R-cfg	R-cfg
	SPIDATA<7:0>							
15:8	R-cfg	R-cfg	R-cfg	R-cfg	R-cfg	R-cfg	R-cfg	R-cfg
	SPIADDR<7:0>							
7:0	R-cfg	R-cfg	R-cfg	R-cfg	R-cfg	R-cfg	R-cfg	R-cfg
	CMD	CMPBVAL	DELAY<5:0>					

Legend:		
R = Readable bit	W = Writable bit	U = Unimplemented bit, read as '0'
cfg = Configurable at Reset	'1' = Bit is set	'0' = Bit is cleared

bit 31-16 **SPIDATA<15:0>:** SPI Data
SPI read data compare if CMD = 1
SPI write data if CMD = 0

bit 15-8 **SPIADDR<7:0>:** SPI Address
SPI read address if CMD = 1
SPI write address if CMD = 0

bit 7 **CMD:** SPI Command bit
1 = SPI read command
0 = SPI write command

bit 6 **CMPBVAL:** Command to set the compare bit value in read sequence
1 = Compare for bit value 1. Bit value of zero in SPIDATA is ignored for comparison.
0 = Compare for bit value 0. Bit value of one in SPIDATA is ignored for comparison

bit 5-0 **DELAY<5:0>:** Delay

REGISTER 35-9: PMUCFG: PMU CONFIGURATION REGISTER

Bit Range	Bit 31/23/15/7	Bit 30/22/14/6	Bit 29/21/13/5	Bit 28/20/12/4	Bit 27/19/11/3	Bit 26/18/10/2	Bit 25/17/9/1	Bit 24/16/8/0
31:24	U-0	U-0	U-0	U-0	U-0	U-0	U-0	U-0
	—	—	—	—	—	—	—	—
23:16	U-0	U-0	U-0	U-0	U-0	U-0	U-0	U-0
	—	—	—	—	—	—	—	—
15:8	U-0	U-0	U-0	U-0	U-0	U-0	U-0	U-0
	—	—	—	—	—	—	—	—
7:0	U-0	U-0	R-cfg	R-cfg	R-cfg	R-cfg	R-cfg	R-cfg
	—	—	DELAY<5:0>					

Legend:		
R = Readable bit	W = Writable bit	U = Unimplemented bit, read as '0'
cfg = Configurable at Reset	'1' = Bit is set	'0' = Bit is cleared

bit 31-7 **Unimplemented:** Read as '0'

bit 5-0 **DELAY<5:0>:** Delay

 © 2020 Microchip Technology Inc.

REGISTER 35-10: PMUWCMCMD: PMU WI-FI CONTEXT MEMORY COMMAND REGISTER

Bit Range	Bit 31/23/15/7	Bit 30/22/14/6	Bit 29/21/13/5	Bit 28/20/12/4	Bit 27/19/11/3	Bit 26/18/10/2	Bit 25/17/9/1	Bit 24/16/8/0
31:24	R/W-0	R/W-0	U-0	R-1	U-0	U-0	U-0	U-0
	MODE	CMD	—	WCMRDY	—	—	—	—
23:16	U-0	U-0	U-0	U-0	U-0	R/W-1	R/W-0	R/W-0
	—	—	—	—	—	WCMCLKDIV<2:0>		
15:8	U-0	U-0	U-0	U-0	U-0	R/W-0	R/W-0	R/W-0
	—	—	—	—	—	WCMADDR<10:8>		
7:0	R/W-0	R/W-0	R/W-0	R/W-0	R/W-0	R/W-0	R/W-0	R/W-0
	WCMADDR<7:0>							

Legend:			
R = Readable bit	W = Writable bit	U = Unimplemented bit, read as '0'	
-n = Value at POR	'1' = Bit is set	'0' = Bit is cleared	x = Bit is unknown

bit 31 **MODE:** PMU WCM Operating Mode
0 = Direct addressing. The PMU memory is accessed using memory mapped address PMUWCM address space over Fast PB1 at System Clock. The PMUWCMCMD.WCMCLKDIV is ignored.
1 = Indirect addressing. The PMU memory is accessed using PMUCWCMD, PMUWCMDATA, and PMUWCMRDDATA registers. (Low Power mode)

bit 30 **CMD:** PMU WCM Command bit
1 = WCM read command (using PMUWCMCMD.WCMADDR, PMUWCMRDDATA registers)
0 = WCM write command (using PMUWCMCMD.WCMADDR, PMUWCMWRDATA registers)

bit 29 **Unimplemented:** Read as '0'

bit 28 **WCMRDY:** PMU WCM Ready Flag
1 = PMU WCM transaction is complete or PMU WCM is ready for next WCM command.
0 = PMU WCM transaction in progress or WCM is busy

bit 27-19 **Unimplemented:** Read as '0'

bit 18-16 **WCMCLKDIV:** WCM Clock Divider
WCMCLK = SYS_CLK/$2^{wcmclkdiv}$

bit 15-11 **Unimplemented:** Read as '0'

bit 10-0 **WCMADDR<10:0>:** PMU WCM Address in Indirect Addressing Mode

REGISTER 35-11: PMUWCMWDATA: PMU WI-FI CONTEXT MEMORY WRITE REGISTER

Bit Range	Bit 31/23/15/7	Bit 30/22/14/6	Bit 29/21/13/5	Bit 28/20/12/4	Bit 27/19/11/3	Bit 26/18/10/2	Bit 25/17/9/1	Bit 24/16/8/0
31:24	R/W-0	R/W-0	R/W-0	R/W-0	R/W-0	R/W-0	R/W-0	R/W-0
	WDATA<7:0>							
23:16	R/W-0	R/W-0	R/W-0	R/W-0	R/W-0	R/W-0	R/W-0	R/W-0
	WDATA<7:0>							
15:8	R/W-0	R/W-0	R/W-0	R/W-0	R/W-0	R/W-0	R/W-0	R/W-0
	WDATA<7:0>							
7:0	R/W-0	R/W-0	R/W-0	R/W-0	R/W-0	R/W-0	R/W-0	R/W-0
	WDATA<7:0>							

Legend:			
R = Readable bit	W = Writable bit	U = Unimplemented bit, read as '0'	
-n = Value at POR	'1' = Bit is set	'0' = Bit is cleared	x = Bit is unknown

bit 31-0 **WDATA<31:0>:** PMU WCM Write Data

 © 2020 Microchip Technology Inc.

REGISTER 35-12: PMUWCMRDATA: PMU WI-FI CONTEXT MEMORY READ REGISTER

Bit Range	Bit 31/23/15/7	Bit 30/22/14/6	Bit 29/21/13/5	Bit 28/20/12/4	Bit 27/19/11/3	Bit 26/18/10/2	Bit 25/17/9/1	Bit 24/16/8/0
31:24	R/W-0	R/W-0	R/W-0	R/W-0	R/W-0	R/W-0	R/W-0	R/W-0
	RDATA<31:24>							
23:16	R/W-0	R/W-0	R/W-0	R/W-0	R/W-0	R/W-0	R/W-0	R/W-0
	RDATA<23:16>							
15:8	R/W-0	R/W-0	R/W-0	R/W-0	R/W-0	R/W-0	R/W-0	R/W-0
	RDATA<15:8>							
7:0	R/W-0	R/W-0	R/W-0	R/W-0	R/W-0	R/W-0	R/W-0	R/W-0
	RDATA<7:0>							

Legend:			
R = Readable bit	W = Writable bit	U = Unimplemented bit, read as '0'	
-n = Value at POR	'1' = Bit is set	'0' = Bit is cleared	x = Bit is unknown

bit 31-0 **RDATA<31:0>:** PMU WCM Read Data

 © 2020 Microchip Technology Inc.

36.0 POWER-SAVING FEATURES

This section describes power-saving features for the PIC32MZ W1 devices. These devices offer various methods and modes that allow the user to balance power consumption with device performance. In all of the methods and modes described in this section, power-saving is controlled by software.

36.1 Power-Saving with CPU Running

When the CPU is running, power consumption can be controlled by reducing the CPU clock frequency, lowering the speed of PBCLK6, or selecting a lower power clock source (LPRC or SOSC).

In addition, the Peripheral Bus Scaling mode is available for each peripheral bus where peripherals are clocked at reduced speed by selecting a higher divider for the associated PBCLKx, or by selectively disabling the clock completely.

36.1.1 Wi-Fi POWER-SAVE MODE WITH MCU IN RUN MODE

Wi-Fi subsystem is one of the peripheral of PIC32MZ W1 device. Wi-Fi subsystem has Sleep mode controller (SMC) module to control Wi-Fi low-power states and modes (WSM and WDS). Entry into WOFF mode is controlled outside of Wi-Fi subsystem.

When the CPU is running, Wi-Fi Sleep Mode (WSM) and Wi-Fi Deep Sleep Mode (WDS) can be enable to reduce device the power consumption.

TABLE 36-1: WI-FI POWER-SAVE MODE WITH MCU IN RUN MODE

CPU State	MCU Mode	Wi-Fi Power Save Mode (Asynchronous)
RUN	RUN	RUN
		WSM
		WDS

36.2 Power-Saving with CPU Halted

Peripherals and the CPU can be Halted or disabled to further reduce power consumption.

36.2.1 SLEEP MODE

Sleep mode has the lowest power consumption of the device power-saving operating modes. The CPU and most peripherals are halted and the associated clocks are disabled. Select peripherals can continue to operate in Sleep mode and can be used to wake the device from sleep. See the individual peripheral module sections for descriptions of behavior in Sleep mode.

The device enters Sleep mode when the SLPEN bit (OSCCON<4>) is set and a `WAIT` instruction is executed.

Sleep mode includes the following characteristics:

- There can be a wake-up delay based on the oscillator Selection
- Fail-Safe Clock Monitor (FSCM) does not operate during Sleep mode
- BOR circuit remains operative during Sleep mode
- WDT, if enabled, is not automatically cleared prior to entering Sleep mode
- Some peripherals can continue to operate at limited functionality in Sleep mode. These peripherals include I/O pins that detect a change in the input signal, WDT, ADC, UART and peripherals that use an external clock input or the internal LPRC oscillator (for example, RTCC, Timer1 and Input Capture).
- I/O pins continue to sink or source current in the same manner as they do when the device is not in Sleep mode

The processor will exit, or wake-up, from sleep on one of the following events:

- On any interrupt from an enabled source that is operating in Sleep mode. The interrupt priority must be greater than the current CPU priority.
- On any form of device Reset
- On a WDT time-out
- Wake on Wi-Fi data packet

If the interrupt priority is lower than or equal to the current priority, the CPU will remain halted, but the peripheral bus clocks will start running and the device will enter into Idle mode.

The device enters Dream mode when the DRMEN bit (OSCCON<23>) and SLPEN bit (OSCCON<4>) are set and a `WAIT` instruction is executed.

Dream mode includes the following characteristics:

- While entering Sleep mode, CRU monitors the DMA transfer status. If any DMA transaction is in progress, CPU will enter idle mode until the DMA transfer is complete.
- When the CPU is in Sleep mode, and an interrupt triggers DMA, then CPU enters idle mode again until the DMA transfer is complete. On completion, CPU switches back to Sleep mode. (In this case interrupt priority is high enough to trigger a DMA but not to wake-up the core).

36.2.1.1 Wi-Fi Power-Save Mode with MCU in Sleep/Dream Mode

When the CPU is in halted state and MCU is in the Sleep/Dream mode, device can be configured with below Wi-Fi Power mode to reduce the power consumption.

TABLE 36-2: WI-FI POWER-SAVE MODE WITH MCU IN SLEEP/DREAM MODE

CPU State	MCU Mode	Wi-Fi® Power-Save Mode (Synchronous)	Wi-Fi® Power-Save Mode (Asynchronous)
Halted	Sleep/ Dream	WSM	WSM
		WDS	WDS
		WOFF	-

36.2.2 IDLE MODE

In Idle mode, the CPU is halted; however, all clocks are still enabled. This allows peripherals to continue to operate. Peripherals can be individually configured to Halt when entering Idle by setting their respective SIDL bit. latency, when exiting Idle mode, is very low due to the CPU oscillator source remaining active.

The device enters Idle mode when the SLPEN bit (OSCCON<4>) is clear and a `WAIT` instruction is executed.

The processor will wake or exit from Idle mode on the following events:

- On any interrupt event for which the interrupt source is enabled. The priority of the interrupt event must be greater than the current priority of the CPU. If the priority of the interrupt event is lower than or equal to current priority of the CPU, the CPU will remain halted and the device will remain in Idle mode.
- On any form of device Reset
- On a WDT time-out interrupt
- Wake on Wi-Fi data packet

36.2.2.1 Wi-Fi Power-Save Mode with MCU in IDLE Mode

When the CPU is in halted state and MCU is in the idle state, device can be configured with below Wi-Fi power mode to reduce the power consumption.

TABLE 36-3: WI-FI POWER SAVE MODE WITH MCU IN IDLE MODE

CPU State	MCU Mode	Wi-Fi Power Save Mode (Synchronous)	Wi-Fi Power Save Mode (Asynchronous)
HALTED	IDLE	WSM	WSM
		WDS	WDS

36.3 Wi-Fi Power Save Modes

Wi-Fi Sleep Mode Controller (SMC) will take over the RF, MAC and BBP-PHY clock gating and power controls once WDS/WSM mode is triggered.SMC will automatically periodically switch between Run, Sleep and Snooze states in Sleep modes. All the wait times related to Sleep and Snooze states are programmable.

In PIC32MZ W1 Wi-Fi subsystem share CPU with MCU therefore Wi-Fi Run mode can't be complete until MCU is in Run mode.The Wi-Fi Run mode will force the MCU to be in Run mode.For intermediate state Snooze, CPU involvement is not required to process the incoming Wi-Fi packets.

Synchronous mode: MCU sleep entry force the Wi-Fi (SMC) into Sleep mode and vice-versa. The MCU sleep exit force the Wi-Fi (SMC) to exit and vice-versa.

Asynchronous mode: Entry into Sleep mode for Wi-Fi (SMC) can be independent of the MCU Sleep mode entry. The MCU wakeup (non Wi-Fi) can be independent of the Wi-Fi power save modes if configured accordingly. However, Wi-Fi (SMC) wakeup to Run mode will force MCU into Run mode.

MCU sleep entry forces Wi-Fi (SMC) into Sleep if not already in Sleep mode but not true vice versa. Wi-Fi (SMC) sleep exit forces MCU out of Sleep mode if not in Run mode but not true vice versa.

Wi-Fi (SMC) power save modes (WSM and WDS) have the following internal states:

- Run state:
  - Wi-Fi subsystem can transmit or receive any of Wi-Fi packets. (Both TX and RX are active)
- Sleep state:
  - Wi-Fi subsystem cannot transmit or receive any of Wi-Fi packets.(Both TX and RX are inactive)
- Snooze state:
  - Snooze is a transient state, the Wi-Fi subsystem will transition into and out of while in either WSM or WDS Mode.TX is inactive and RX is active.
  - Entering/Existing to snooze state is dependent on the sleep duration or wakeup for TBTT configuration.

36.3.1 WSM: Wi-Fi SLEEP MODE

- Faster recovery from the Sleep mode
- WSM can put Wi-Fi (SMC) to sleep independently without putting MCU into Sleep mode
- During the WSM-sleep state, the RF is in Sleep mode, POSC is ON, RF internal LDOs, PLL and TX/RX chains are clock gated
- RAM and Wi-Fi register contents are retained
- On wakeup, CPU will continue execution from the next instruction at which it went to sleep
- Wakeup source from WSM:

 © 2020 Microchip Technology Inc.

- Wake on WSM sleep duration complete
- When Wi-Fi data is available from access point
- On user request, MCU can trigger exist of Wi-Fi (SMC) Sleep mode

• Customer need to use Software User Guide API to enable WSM mode.

36.3.2 WDS: Wi-Fi DEEP SLEEP MODE

• Lowest power consuming Sleep state and favorable for longer sleep duration
• The RF is powered down completely including primary oscillator (POSC), RF internal LDOs, PLL and TX/RX chains.
• If primary oscillator has any system peripheral request apart from Wi-Fi (SMC) than device will always enter into WSM even if system request WDS mode.
• SMC can exist in either WDS Sleep state or Snooze state
• WDS can put SMC to sleep independently without putting system into Sleep mode
• RAM and Wi-Fi register contents are retained
• On Wakeup, CPU will continue execution from the next instruction at which it went to sleep
• Wakeup source from WDS:
  - Wake on WSM sleep duration complete
  - When Wi-Fi data is available from access point
  - On user request, MCU can trigger exist of Wi-Fi (SMC) Sleep mode
• Customer need to use Software User Guide API to enable WSM mode.

36.3.3 WOFF: Wi-Fi POWER-OFF MODE

• WOFF mode where the complete Wi-Fi sub-system power is shut off and all the configuration registers and memory contents are lost.
• WOFF can use WCM memory before triggering WOFF mode for retained any context that needs to be retained.
• Re-initialization of Wi-Fi subsystem required in case data are not retained in the WCM memory.
• On Wakeup, CPU will continue execution from the next instruction at which it went to sleep.
• Wakeup source from WOFF:
  - There is no wakeup source for WOFF, software has to reinitialize Wi-Fi subsystem.
• The device enters WOFF mode when the WLDOOFF bit (PMUCLKCTRL<30>) is set.

36.4 Peripheral Module Disable

The Peripheral Module Disable (PMD) registers provide a method to disable a peripheral module by stopping all clock sources supplied to that module. When a peripheral is disabled using the appropriate PMD control bit, the peripheral is in a minimum power consumption state. The control and status registers associated with the peripheral are also disabled, so writes to those registers do not have effect and read values are invalid.

To disable a peripheral, the associated PMDx bit must be set to '1'. To enable a peripheral, the associated PMDx bit must be cleared (default). See Table 36-1 for more information.

Note:	Disabling a peripheral module while it's ON bit is set, may result in undefined behavior. The ON bit for the associated peripheral module must be cleared prior to disable a module via the PMDx bits.

TABLE 36-1: PERIPHERAL MODULE DISABLE BITS AND LOCATIONS

Peripheral	PMDx Bit Name	Register Name and Bit Location
ADC SAR0	ADCSAR0MD	PMD1<0>
PLDV	PLVD1MD	PMD1<4>
Shared ADC SAR	ADCSARSHRMD	PMD1<7>
ADC	ADC1MD	PMD1<8>
PTG	PTGMD	PMD1<11>
CVD	CVD1MD	PMD1<15>
RTCC	RTCC1MD	PMD1<16>
DMA	DMA1MD	PMD1<19>
Asymmetric crypto	BA414MD	PMD1<23>
Crypto	CRYPT1MD	PMD1<24>
Random Number Generator	RNG1MD	PMD1<26>
SQI	SQI1MD	PMD1<29>

TABLE 36-1: PERIPHERAL MODULE DISABLE BITS AND LOCATIONS (CONTINUED)

Peripheral	PMDx Bit Name	Register Name and Bit Location
Input Capture 1	IC1MD	PMD2<0>
Input Capture 2	IC2MD	PMD2<1>
Input Capture 3	IC3MD	PMD2<2>
Input Capture 4	IC4MD	PMD2<3>
Output Compare 1	OC1MD	PMD2<8>
Output Compare 2	OC2MD	PMD2<9>
Output Compare 3	OC3MD	PMD2<10>
Output Compare 4	OC4MD	PMD2<11>
Timer 1	T1MD	PMD2<16>
Timer 2	T1MD	PMD2<17>
Timer 3	T1MD	PMD2<18>
Timer 4	T1MD	PMD2<19>
Timer 5	T1MD	PMD2<20>
Timer 6	T1MD	PMD2<21>
Timer 7	T1MD	PMD2<22>
Reference Clock Output 1	REFO1MD	PMD2<28>
Reference Clock Output 2	REFO2MD	PMD2<29>
Reference Clock Output 3	REFO3MD	PMD2<30>
Reference Clock Output 4	REFO4MD	PMD2<33>
UART1	U1MD	PMD3<0>
UART2	U2MD	PMD3<1>
UART3	U3MD	PMD3<2>
Ethernet	ETH1MD	PMD3<4>
SPI1	SPI1MD	PMD3<8>
SPI2	SPI2MD	PMD3<9>
Wi-Fi	W24GMD	PMD3<12>
I2C0	I2C0MD	PMD3<16>
I2C1	I2C1MD	PMD3<17>
USB	USB1MD	PMD3<24>
CAN 1	CAN1MD	PMD3<0>
CAN 2	CAN2MD	PMD3<0>

 © 2020 Microchip Technology Inc.

36.5 Peripheral Module Disable Registers

TABLE 36-2: PERIPHERAL MODULE DISABLE REGISTER SUMMARY

Virtual Address (BF80_#)	Register Name(1,2)	Bit Range	Bits																All Resets
			31/15	30/14	29/13	28/12	27/11	26/10	25/9	24/8	23/7	22/6	21/5	20/4	19/3	18/2	17/1	16/0	
0090	PMD1	31:16	—	—	SQI1MD	—	—	RNG1MD	—	CRYPT1MD	BA414MD	—	—	—	DMA1MD	—	—	RTCC1MD	0000
		15:0	CVD1MD	—	—	—	PTGMD	—	—	ADC1MD	ADCSARSHRMD	—	—	—	—	—	—	ADCSAR0MD	0000
00A0	PMD2	31:16	REFO4MD	REFO3MD	REFO2MD	REFO1MD	—	—	—	—	—	T7MD	T6MD	T5MD	T4MD	T3MD	T2MD	T1MD	0000
		15:0	—	—	—	—	OC4MD	OC3MD	OC2MD	OC1MD	—	—	—	—	IC4MD	IC3MD	IC2MD	IC1MD	0000
00B0	PMD3	31:16	—	—	—	CAN2MD	CAN1MD	—	—	USB1MD	—	—	—	—	—	—	I2C2MD	I2C1MD	0000
		15:0	—	—	—	W24GMD	—	—	SPI2MD	SPI1MD	—	—	—	ETH1MD	—	U3MD	U2MD	U1MD	0000

Legend: x = unknown value on Reset; — = unimplemented, read as '0'. Reset values are shown in hexadecimal.

Note 1: All registers have corresponding CLR, SET and INV registers at their virtual addresses, plus offsets of 0x4, 0x8 and 0xC, respectively. See **Section 13.3 "CLR, SET, and INV Registers"** for more information.

2: All register bits are only writable when PMDLOCK Configuration (CFGCON0<12>) bit is 0.

© 2020 Microchip Technology Inc.

REGISTER 36-4: PMD1: PERIPHERAL MODULE DISABLE 1 REGISTER

Bit Range	Bit 31/23/15/7	Bit 30/22/14/6	Bit 29/21/13/5	Bit 28/20/12/4	Bit 27/19/11/3	Bit 26/18/10/2	Bit 25/17/9/1	Bit 24/16/8/0
31:24	U-0	U-0	R/W/L-0	U-0	U-0	R/W/L-0	U-0	R/W/L-0
	—	—	SQI1MD	—	—	RNG1MD	—	CRYPT1MD
23:16	R/W/L-0	U-0	U-0	U-0	R/W/L-0	U-0	U-0	R/W/L-0
	BA414MD	—	—	—	DMA1MD	—	—	RTCC1MD
15:8	R/W/L-0	U-0	U-0	U-0	R/W/L-0	U-0	U-0	R/W/L-0
	CVD1MD	—	—	—	PTGMD	—	—	ADC1MD
7:0	R/W/L-0	U-0	U-0	U-0	U-0	U-0	U-0	R/W/L-0
	ADCSARSHRMD	—	—	—	—	—	—	ADCSAR0MD

Legend:			
R = Readable bit	W = Writable bit	U = Unimplemented bit, read as '0'	
-n = Value at POR	'1' = Bit is set	'0' = Bit is cleared	L = Lockable bit

bit 31-30 **Unimplemented:** Read as '0'

bit 29 **SQI1MD:** SQI Module Disable bit
1 = Disabled
0 = Enabled

bit 28-27 **Unimplemented:** Read as '0'

bit 26 **RNG1MD:** RNG1 Module Disable bit
1 = Disabled
0 = Enabled

bit 25 **Unimplemented:** Read as '0'

bit 24 **CRYPT1MD:** CRYPTO1 Module Disable bit
1 = Disabled
0 = Enabled

bit 23 **BA414MD:** Asymmetric Crypto Module Disable bit
1 = Disabled
0 = Enabled

bit 22-20 **Unimplemented:** Read as '0'

bit 19 **DMA1MD:** DMA Controller Module Disable bit
1 = Disabled
0 = Enabled

bit 18-17 **Unimplemented:** Read as '0'

bit 16 **RTCC1MD:** RTCC Module Disable bit
1 = Disabled
0 = Enabled

bit 15 **CVD1MD:** CVD Module Disable bit
1 = Disabled
0 = Enabled

bit 14-12 **Unimplemented:** Read as '0'

bit 11 **PTGMD:** PTG Module Disable bit
1 = Disabled
0 = Enabled

bit 10-9 **Unimplemented:** Read as '0'

bit 8 **ADC1MD:** ADC Controller Module Disable bit
1 = Disabled
0 = Enabled

 © 2020 Microchip Technology Inc.

REGISTER 36-4: PMD1: PERIPHERAL MODULE DISABLE 1 REGISTER (CONTINUED)

bit 7 **ADCSARSHRMD:** Shared ADC SAR Core Module Disable bit
1 = When disabled, the corresponding ADC SAR SHARED will be disabled.
0 = Enabled

bit 6-5 **Unimplemented:** Read as '0'

bit 4 **PLVD1MD:** PLVD Module Disable bit
1 = When disabled, the corresponding PLVD will be disabled.
0 = Enabled

bit 3-1 **Unimplemented:** Read as '0'

bit 0 **ADCSAR0MD:** ADC SAR Core 0 Module Disable bit
1 = When disabled, the corresponding ADC SAR will be disabled.
0 = Enabled

REGISTER 36-5: PMD2: PERIPHERAL MODULE DISABLE 2 REGISTER

Bit Range	Bit 31/23/15/7	Bit 30/22/14/6	Bit 29/21/13/5	Bit 28/20/12/4	Bit 27/19/11/3	Bit 26/18/10/2	Bit 25/17/9/1	Bit 24/16/8/0
31:24	R/W/L-0	R/W/L-0	R/W/L-0	R/W/L-0	U-0	U-0	U-0	U-0
	REFO4MD	REFO3MD	REFO2MD	REFO1MD	—	—	—	—
23:16	U-0	R/W/L-0	R/W/L-0	R/W/L-0	R/W/L-0	R/W/L-0	R/W/L-0	R/W/L-0
	—	T7MD	T6MD	T5MD	T4MD	T3MD	T2MD	T1MD
15:8	U-0	U-0	U-0	U-0	R/W/L-0	R/W/L-0	R/W/L-0	R/W/L-0
	—	—	—	—	OC4MD	OC3MD	OC2MD	OC1MD
7:0	U-0	U-0	U-0	U-0	R/W/L-0	R/W/L-0	R/W/L-0	R/W/L-0
	—	—	—	—	IC4MD	IC3MD	IC2MD	IC1MD

Legend:			
R = Readable bit	W = Writable bit	U = Unimplemented bit, read as '0'	
-n = Value at POR	'1' = Bit is set	'0' = Bit is cleared	L = Lockable bit

bit 31-28 **REFOnMD:** Reference (Clock) Out n Module Disable bit
1 = Disabled
0 = Enabled

bit 27-23 **Unimplemented:** Read as '0'

bit 22-16 **TnMD:** Timer n Module Disable bit
1 = Disabled
0 = Enabled

bit 15-12 **Unimplemented:** Read as '0'

bit 11-8 **OCnMD:** Output Compare n Module Disable bit
1 = Disabled
0 = Enabled

bit 7-4 **Unimplemented:** Read as '0'

bit 3-0 **ICnMD:** Input Capture n Module Disable bit
1 = Disabled
0 = Enabled

 © 2020 Microchip Technology Inc.

REGISTER 36-6: PMD3: PERIPHERAL MODULE DISABLE 3 REGISTER

Bit Range	Bit 31/23/15/7	Bit 30/22/14/6	Bit 29/21/13/5	Bit 28/20/12/4	Bit 27/19/11/3	Bit 26/18/10/2	Bit 25/17/9/1	Bit 24/16/8/0
31:24	U-0	U-0	U-0	R/W/L-0	R/W/L-0	U-0	U-0	R/W/L-0
	—	—	—	CAN2MD	CAN1MD	—	—	USB1MD
23:16	U-0	U-0	U-0	U-0	U-0	U-0	R/W/L-0	R/W/L-0
	—	—	—	—	—	—	I2C2MD	I2C1MD
15:8	U-0	U-0	U-0	R/W/L-0	U-0	U-0	R/W/L-0	R/W/L-0
	—	—	—	W24GMD	—	—	SPI2MD	SPI1MD
7:0	U-0	U-0	U-0	R/W/L-0	U-0	R/W/L-0	R/W/L-0	R/W/L-0
	—	—	—	ETH1MD	—	U3MD	U2MD	U1MD

Legend:			
R = Readable bit	W = Writable bit	U = Unimplemented bit, read as '0'	
-n = Value at POR	'1' = Bit is set	'0' = Bit is cleared	L = Lockable bit

bit 31-29 **Unimplemented:** Read as '0'

bit 28-27 **CANnMD:** CAN Module Disable bit
1 = Disabled
0 = Enabled

bit 26-25 **Unimplemented:** Read as '0'

bit 24 **USB1MD:** USB Module Disable bit
1 = Disabled
0 = Enabled

bit 23-18 **Unimplemented:** Read as '0'

bit 17 **I2C1MD:** I2C 1 Module Disable bit
1 = Disabled
0 = Enabled

bit 16 **I2C0MD:** I2C 0 Module Disable bit
1 = Disabled
0 = Enabled

bit 15-13 **Unimplemented:** Read as '0'

bit 12 **W24GMD:** WiFi Module Disable bit
1 = Disabled
0 = Enabled

bit 11-10 **Unimplemented:** Read as '0'

bit 9 **SPI2MD:** SPI 2 Module Disable bit
1 = Disabled
0 = Enabled

bit 8 **SPI1MD:** SPI 1 Module Disable bit
1 = Disabled
0 = Enabled

bit 7-5 **Unimplemented:** Read as '0'

bit 4 **ETH1MD:** Ethernet Module Disable bit
1 = Disabled
0 = Enabled

bit 3 **Unimplemented:** Read as '0'

REGISTER 36-6: PMD3: PERIPHERAL MODULE DISABLE 3 REGISTER (CONTINUED)

bit 2-0 **UnMD:** UART Module Disable bit
1 = Disabled
0 = Enabled

 © 2020 Microchip Technology Inc.

36.5.1 CONTROLLING CONFIGURATION CHANGES

Peripherals can be disabled during run time, some restrictions on disabling peripherals are needed to prevent accidental configuration changes. PIC32MZ W1 devices include Control Register Lock sequence to prevent alterations to enabled or disabled peripherals.

 © 2020 Microchip Technology Inc.

37.0 SPECIAL FEATURES

Note: This data sheet summarizes the features of the PIC32MZ W1 family of devices. However, it is not intended to be a comprehensive reference source. To complement the information in this data sheet, refer to **Section 32. "Configuration"** (DS60001124) and **Section 33. "Programming and Diagnostics"** (DS60001129) in the *"PIC32 Family Reference Manual"*, which are available from the Microchip web site (www.microchip.com/PIC32).

PIC32MZ W1 devices include several features intended to maximize application flexibility and reliability and minimize cost through elimination of external components. These are:

- Flexible device configuration
- Joint Test Action Group (JTAG) interface
- In-Circuit Serial Programming™ (ICSP™)
- Internal temperature sensor

37.1 Configuration Bits

This PIC32MZ W1 device provides several user writable configuration registers related to the configuration and operation of the system.

- Permission Group Configuration Register (CFGPG) defines the permission group.
- System Key Register (SYSKEY) defines the system key.
- Device and Revision ID Register (DEVID) defines the device and revision ID.
- Configuration Control Register 3 (CFGCON3) provides control, selection and locking for various features of the device.
- Configuration Control Register 0 (CFGCON0(L)) provides control, selection and locking for various features of the device. The registers those are marked with (L) are loadable from Flash.
  - ICAP clock selection
  - OCMP clock selection
  - PPS register locking
  - PMD register locking
  - CFGPG register locking
  - Config register locking
  - USB diagnostics enable
  - USB suspend sleep enable
  - JTAG port enable and configuration
  - iFlowtrace port enable
  - Flash ECC control
  - DMA, CPU, FC
- Configuration Control Register 1 (CFGCON1(L)) provides control, selection and locking for various features of the device.
  - Debug port and feature configuration
  - USB port control
  - USB trim bits
  - CFGCON0 locking control
  - Class B functionality enable
  - High-speed UART enable
  - Ethernet RMII enable
- Configuration Control Register 2 (CFGCON2(L)) provides control, selection and locking for various features of the device.
  - DMT enable and configuration
  - WDT enable and configuration
  - Clock monitoring and control
  - Oscillator enable and configuration
  - 2-Speed startup enabled in Sleep Mode bit
  - SYSPLL/EWPLL Postdiv2 programming
- Configuration Control Register 4 (CFGCON4(L)) provides control, selection and locking for various features of the device.
  - Deep sleep modules control
  - SOSC configuration control
- User Unique ID Register (USERID(L)) provides the end user with a 16-bit ID field that maybe read out directly through the JTAG interface via the `USERID` JTAG instruction.

37.2 Special Features Registers

TABLE 37-1: DEVCFG: DEVICE CONFIGURATION WORD SUMMARY

Virtual Address (BF80_#)	Register Name	Bit Range	Bits																All Resets
			31/15	30/14	29/13	28/12	27/11	26/10	25/9	24/8	23/7	22/6	21/5	20/4	19/3	18/2	17/1	16/0	
0000	CFGCON0(L)(1)	31:16	—	ETHTPSF	FECCCON<1:0>		ETHPLLHWMD	BTPLL-HWMD	SPLL-HWMD	UPLL-HWMD	PCM	—	CANFDDIV<1:0>		—	—	IC_ACLK	OC_ACLK	3080
		15:00	CFGLOCK<1:0>		IOLOCK	PMDLOCK	PGLOCK	PMULOCK	—	USBSSEN	EXLPRI	DMAPRI	FCPRI	—	JTAGEN	TROEN	—	TDOEN	00009
0010	CFGCON1(L)(1)	31:16	—	—	—	WDTPS<4:0>					USBDPTRIM<3:0>				USBDMTRIM<3:0>				1F00
		15:00	HSUARTEN	SMCLR	HSSPIEN	VBUSIO	USBIDIO	CLASSBDIS	ETHEX-EREF	FMIIEN	—	—	TRCEN	ICESEL<1:0>		—	DEBUG<1:0>		5B39
0020	CFGCON2(L)(1)	31:16	DMTEN	DMTCNT<4:0>					WDTWINSZ<1:0>		WDTEN	WINDIS	WDTSPGM	WDTPS<4:0>					7F7F
		15:00	FSCMEN	CKSWEN	WAKE2SPD	SOSCSEL	WDTRMCS<1:0>		POSCMOD<1:0>		—	—	DMTINTV<2:0>			—	—	—	FF38
0030	CFGCON3(1)	31:16	—	—	—	—	—	—	—	—	—	—	—	—	—	—	BTPLLPOSTDIV2<5:4>		0000
		15:00	BTPLLPOSTDIV2<3:0>				SPLLPOSTDIV2<5:0>						ETHPLLPOSTDIV2<5:0>						0000
0040	CFGCON4(L)(1)	31:16	—	SOSCEN	—	—	—	—	—	—	—	—	—	—	—	—	—	—	0418
		15:00	—	—	—	—	—	—	—	—	SOSCCFG<7:0>								0000
0050	CFGPG(2)	31:16	—	—	—	—	—	—	—	—	USBPG<1:0>		SQIPG<1:0>		ETHPG<1:0>		CRY1PG<1:0>		0000
		15:00	CAN2PG<1:0>		CAN1PG<1:0>		ADCPG<1:0>		WIFIPG<1:0>		ICDJPG<1:0>		DMAPG<1:0>		FCPG<1:0>		CPUPG<1:0>		0000
0060	DEVID	31:16	VER<3:0>				DEVID<27:16>												xxxx
		15:00	DEVID<15:0>																xxxx
0070	USERID(L)	31:16	—	—	—	—	—	—	—	—	—	—	—	—	—	—	—	—	0000
		15:00	USERID<15:0>																0000
0080	SYSKEY	31:16	SYSKEY<31:16>																0000
		15:00	SYSKEY<15:0>																0000

Legend: x = unknown value on Reset; — = unimplemented, read as '0'. Reset values are shown in hexadecimal.
Note 1: This register is only writable when CFGLOCK Configuration (CFGCON0<15:14>) bit is 00.
2: This register is only writable when PGLOCK Configuration (CFGCON0<11>) bit is 0.

© 2020 Microchip Technology Inc.

REGISTER 37-1: CFGCON0(L): CONFIGURATION CONTROL REGISTER 0

Bit Range	Bit 31/23/15/7	Bit 30/22/14/6	Bit 29/21/13/5	Bit 28/20/12/4	Bit 27/19/11/3	Bit 26/18/10/2	Bit 25/17/9/1	Bit 24/16/8/0
31:24	U-0	R/W/L-0	R/W/L-1	R/W/L-1	R/W/L-0	R/W/L-0	R/W/L-0	R/W/L-0
	—	ETHTPSF	FECCCON<1:0>		ETHPLLHWMD	BTPLLHWMD	SPLLHWMD	UPLLHWMD
23:16	R/W/L-1	U-0	R/W/L-0	R/W/L-0	U-0	U-0	R/W/L-0	R/W/L-0
	PCM	—	CANFDDIV		—	—	IC_ACLK	OC_ACLK
15:8	R/W/L-0	R/W/L-0	R/S/L-0	R/S/L-0	R/S/L-0	R/S/L-0	U-0	R/W/L-0
	CFGLOCK<1:0>		IOLOCK	PMDLOCK	PGLOCK	PMULOCK	—	USBSSEN
7:0	R/W/L-0	R/W/L-0	R/W/L-0	U-0	R/W/L-1	R/W/L-0	U-0	R/W/L-1
	EXLPRI	DMAPRI	FCPRI	—	JTAGEN	TROEN	—	TDOEN

Legend:			
R = Readable bit	W = Writable bit	U = Unimplemented bit, read as '0'	
-n = Value at POR	'1' = Bit is set	'0' = Bit is cleared	L = Lockable bit

bit 31 **Unimplemented:** Read as '0'

bit 30 **ETHTPSF:** Ethernet TX SOF enabled for CTR measurements
1 = TPSF is enabled in CTR measurement
0 = RPSF is enabled in CTR measurement

bit 29-28 **FECCCON:** Flash ECC Controls
11 = ECC and Dynamically ECC Disabled
10 = ECC and Dynamically ECC Disabled
01 = Dynamically ECC Enabled
00 = ECC Enabled (NVMOP = Word Programming disabled)

bit 27 **ETHPLLHWMD:** EWPLL Hardware Control Mode for power down and Reset
1 = Power Down and Reset are generated by hardware
0 = Power Down and Reset are generated by software using corresponding PLLCON register bits

bit 26 **BTPLLHWMD:** BTPLL Hardware Control Mode for power down and Reset
1 = Power Down and Reset are generated by hardware
0 = Power Down and Reset are generated by software using corresponding PLLCON register bits

bit 25 **SPLLHWMD:** SPLL Hardware Control Mode for power down and Reset
1 = Power Down and Reset are generated by hardware
0 = Power Down and Reset are generated by software using corresponding PLLCON register bits

bit 24 **UPLLHWMD:** UPLL Hardware Control Mode for power down and Reset
1 = Power Down and Reset are generated by hardware
0 = Power Down and Reset are generated by software using corresponding PLLCON register bits

bit 23 **PCM:** Prefetch I/D Cacheable Mode
1 = Always enabled. Can be further enabled/disabled by Prefetch module SFR registers.
0 = The cache-ability is controlled by the MIPS CPU via HPROT[3]. This feature is not available on all the MIPS cores.

bit 22 **Unimplemented:** Read as '0'

bit 20-21 **CANFDDIV:** CAN-FD Back-up Clock Divider
0 = Divide-by 2
1 = Divide-by 2
2 = Divide-by 4
3 = Divide-by 8

bit 18-19 **Unimplemented:** Read as '0'

REGISTER 37-1: CFGCON0(L): CONFIGURATION CONTROL REGISTER 0 (CONTINUED)

bit 17 **IC_ACLK:** ICAP Alternate Clock Selection
1 = ICAP Modules use an alternative timer pair as their timebase clock
0 = All ICAP Modules use timer2/timer3 as their timebase clock

bit 16 **OC_ACLK:** OCMP Alternate Clock Selection
1 = OCMP Modules use an alternative timer pair as their timebase clock
0 = All OCMP Modules use timer2/timer3 as their timebase clock

bit 15-14 **CFGLOCK[1:0]:** Configuration Register Lock
11 = All NVR memory self-writes, Boot Configuration (BCFG0) and System Configuration registers (CFG* and USERID) are locked and can not be written - CFGLOCK value can not be changed.
10 = All NVR memory self-writes, Boot Configuration (BCFG0) and System Configuration registers (CFG* and USERID) are locked and can not be written - CFGLOCK value can be changed.
01 = Reserved for future use
00 = All NVR memory self-writes, Boot Configuration (BCFG0) and System Configuration registers (CFG* and USERID) are not locked and can be written - CFGLOCK value can be changed.

bit 13 **IOLOCK:** IO Lock
1 = IO Remap SFR bits are locked and cannot be modified
0 = IO Remap SFR are not locked and can be modified

bit 12 **PMDLOCK:** Peripheral Module Disable (PMD) Lock
1 = PMDx SFR bits are locked and cannot be modified
0 = PMDx SFR bits are not locked and can be modified

bit 11 **PGLOCK:** Permission Group Lock
1 = CFGPG SFR bits are locked and cannot be modified
0 = CFGPG SFR bits are not locked and can be modified

bit 10 **PMULOCK:** PMU Controller Register Lock
1 = PMU SFR bits are locked and cannot be modified
0 = PMU SFR bits are not locked and can be modified

bit 9 **Unimplemented:** Read as '0'

bit 8 **USBSSEN:** USB Suspend Sleep Enable
Enables features for USB PHY FREF Clock shutdown in SUSPEND Mode.
1 = USB FREF clock is shut down when suspend mode is active.
0 = USB FREF clock continues to run when suspend mode is active.

bit 7 **EXLPRI:** CPU arbitration Priority to SRAM when servicing an Interrupt (i.e. EXL=1)
1 = CPU gets High Priority access to SRAM1, SRAM2
0 = CPU uses Least Recently Serviced Arbitration (same as other initiators)

bit 6 **DMAPRI:** DMAR and DMAW arbitration Priority to SRAM
1 = DMA gets High Priority access to SRAM1, SRAM2
0 = DMA uses Least Recently Serviced Arbitration (same as other initiators)

bit 5 **FCPRI:** FC arbitration Priority to SRAM
1 = FC gets High Priority access to SRAM1, SRAM2
0 = FC uses Least Recently Serviced Arbitration (same as other initiators)

bit 4 **Unimplemented:** Read as '0'

bit 3 **JTAGEN:** JTAG Enable
1 = JTAG Port Enabled
0 = JTAG Port Disabled

bit 2 **TROEN:** Trace Output Enable
1 = Start Trace Clock and enable Trace Outputs (Trace Probe must be present)
0 = Stop Trace Clock and disable Trace Outputs

bit 1 **Unimplemented:** Read as '0'

bit 0 **TDOEN:** TDO enable for 2-wire JTAG
1 = 2-wire JTAG protocol uses TDO
0 = 2-wire JTAG protocol does not use TDO

 © 2020 Microchip Technology Inc.

REGISTER 37-2: CFGCON1(L): CONFIGURATION CONTROL REGISTER 1

Bit Range	Bit 31/23/15/7	Bit 30/22/14/6	Bit 29/21/13/5	Bit 28/20/12/4	Bit 27/19/11/3	Bit 26/18/10/2	Bit 25/17/9/1	Bit 24/16/8/0
31:24	U-0	U-0	U-0	R/W/L-1	R/W/L-1	R/W/L-1	R/W/L-1	R/W/L-1
	—	—	—	WDTPS<4:0>				
23:16	R/W/L-0	R/W/L-0	R/W/L-0	R/W/L-0	R/W/L-0	R/W/L-0	R/W/L-0	R/W/L-0
	USBDPTRIM<3:0>				USBDMTRIM<3:0>			
15:8	R/W/L-0	R/W/L-1	R/W/L-0	R/W/L-1	R/W/L-1	R/W/L-1	R/W/L-0	R/W/L-0
	HSUARTEN	SMCLR	HSSPIEN	VBUSIO	USBIDIO	CLASSBDIS	ETHEXEREF	USBSSEN
7:0	U-0	U-0	R/W/L-1	R/W/L-11	R/W/L-11	U-0	R/W/L-11	R/W/L-11
	—	—	TRCEN	ICESEL<1:0>		—	DEBUG<1:0>	

Legend:			
R = Readable bit	W = Writable bit	U = Unimplemented bit, read as '0'	
-n = Value at POR	'1' = Bit is set	'0' = Bit is cleared	L = Lockable bit

bit 32-29 **Unimplemented:** Read as '0'

bit 28-24 **WDTPS<4:0>:** Watchdog Timer Post-scale Select Sleep bits
10100 = 1:1048576
10011 = 1:524288
10010 = 1:262144
10001 = 1:131072
10000 = 1:65536
01111 = 1:32768
01110 = 1:16384
01101 = 1:8192
01100 = 1:4096
01011 = 1:2048
01010 = 1:1024
01001 = 1:512
01000 = 1:256
00111 = 1:128
00110 = 1:64
00101 = 1:32
00100 = 1:16
00011 = 1:8
00010 = 1:4
00001 = 1:2
00000 = 1:1

bit 23-20 **USBDPTRIM<3:0>:** USB DP Rise/Fall Trim fuse bits

bit 19-16 **USBDMTRIM<3:0>:** USB DM Rise/Fall Trim fuse bits

bit 15 **HSUARTEN:** UART1 High Speed Mode Enable
1 = UART1 is driven from/to dedicated pins, resulting in the highest possible maximum baud rate
0 = UART1 is driven through PPS (I/O remap), resulting in a lower maximum baud rate

bit 14 **SMCLR:** Selects CRU handling of $\overline{\text{MCLR}}$ Control
1 = Legacy mode (system clear does not reset all state of device)
0 = $\overline{\text{MCLR}}$ causes a faux POR

REGISTER 37-2: CFGCON1(L): CONFIGURATION CONTROL REGISTER 1 (CONTINUED)

bit 13 **HSSPIEN:** High Speed Mode Enable (SPI-1)
1 = SPI1 is driven from/to dedicated pins, resulting in the highest interface speed
0 = SPI1 is driven through PPS (I/O remap), resulting in a lower interface speed

bit 12 **VBUSIO:** USB VBUS_ON Selection bit
1 = VBUS_ON pin is controlled by the USB Module
0 = VBUS_ON pin is controlled by the Port Function

bit 11 **USBIDIO:** USB USBID Selection bit
1 = USBID pin is controlled by the USB Module
0 = USBID pin is controlled by the Port Function

bit 10 **CLASSBDIS:** Disable CLASSB Device Functionality
0 = CLASSB functions enabled
1 = CLASSB functions disabled

bit 9 **ETHEXEREF:** Exclusive Ethernet PHY Reference Clock Enable
0 = Ethernet clock out will be used as PHY reference clock
1 = PHY reference clock is made available on Ethernet Exclusive clock out

bit 8 **FMIIEN:** Ethernet1 MII Enable
1 = 18-pin 25MHz Media Independent Interface is enabled
0 = 10-pin 50MHz Reduced Media Independent Interface is enabled

bit 7-6 **Unimplemented:** Read as '0'

bit 5 **TRCEN:** Trace Enable
1 =Trace features in the CPU are enabled
0 =Trace features in the CPU are disabled

bit 4-3 **ICESEL<1:0>:** In-Circuit Emulator/Debugger Communication Channel Select bits
11 = PGC1/PGD1 pair is used
10 = PGC2/PGD2 pair is used
01 =Reserved
00 = PGC4/PGD4 pair is used

bit 2 **Unimplemented:** Read as '0'

bit 1-0 **DEBUG<1:0>:** Background Debugger Enable bits (forced to '11' if code-protect is enabled)
1x = Debugger is disabled
0x = Debugger is enabled

 © 2020 Microchip Technology Inc.

REGISTER 37-3: CFGCON2(L): CONFIGURATION CONTROL REGISTER 2

Bit Range	Bit 31/23/15/7	Bit 30/22/14/6	Bit 29/21/13/5	Bit 28/20/12/4	Bit 27/19/11/3	Bit 26/18/10/2	Bit 25/17/9/1	Bit 24/16/8/0
31:24	R/W/L-0	R/W/L-1	R/W/L-1	R/W/L-1	R/W/L-1	R/W/L-1	R/W/L-1	R/W/L-1
	DMTEN	DMTCNT<4:0>					WDTWINSZ<1:0>	
23:16	R/W/L-0	R/W/L-1	R/W/L-1	R/W/L-1	R/W/L-1	R/W/L-1	R/W/L-1	R/W/L-1
	WDTEN	WINDIS	WDTSPGM	WDTPS<4:0>				
15:8	R/W/L-1	R/W/L-1	R/W/L-1	R/W/L-1	R/W/L-1	R/W/L-1	R/W/L-1	R/W/L-1
	FSCMEN	CKSWEN	WAKE2SPD	SOSCSEL	WDTRMCS<1:0>		POSCMOD<1:0>	
7:0	U-0	U-0	R/W/L-1	R/W/L-1	R/W/L-1	U-0	U-0	U-0
	—	—	DMTINTV<2:0>			—	—	—

Legend:			
R = Readable bit	W = Writable bit	U = Unimplemented bit, read as '0'	
-n = Value at POR	'1' = Bit is set	'0' = Bit is cleared	L = Lockable bit

bit 31 **DMTEN:** Dead Man Timer Enable bit
1 = DMT enabled
0 = DMT disabled (control is placed on the DMTCON.ON bit)

bit 30-26 **DMTCNT<4:0>:** Dead Man Timer Count Select bits
00000 = Counter value is 2^8
00001 = Counter value is 2^9
•
•
•
10100 = Counter value is 2^{28}
10101 = Counter value is 2^{29}
10110 = Counter value is 2^{30}
10111 = Counter value is 2^{31}
11000 - 11111= Reserved

bit 25-24 **WDTWINSZ<1:0>:** Watchdog Timer Window Size bits
00 = Window size is 75%
01 = Window size is 50%
10 = Window size is 37.5%
11 = Window size is 25%

bit 23 **WDTEN:** Watchdog Timer Enable bit
1 = WDT enabled
0 = WDT disabled (control is placed on the SWDTEN bit)

bit 22 **WINDIS:** Windowed Watchdog Timer Disable bit
1 = Standard WDT selected; windowed WDT disabled
0 = Windowed WDT enabled

bit 21 **WDTSPGM:** Watchdog Timer Stop during Flash Programming bit
1 = WDT stops during NVR programming (legacy)
0 = WDT runs during NVR programming (for read/execute while programming Flash systems)

REGISTER 37-3: CFGCON2(L): CONFIGURATION CONTROL REGISTER 2 (CONTINUED)

bit 20-16 **WDTPS<4:0>:** Watchdog Timer Post-scale Select Run bits
10100 = 1:1048576
10011 = 1:524288
10010 = 1:262144
10001 = 1:131072
10000 = 1:65536
01111 = 1:32768
01110 = 1:16384
01101 = 1:8192
01100 = 1:4096
01011 = 1:2048
01010 = 1:1024
01001 = 1:512
01000 = 1:256
00111 = 1:128
00110 = 1:64
00101 = 1:32
00100 = 1:16
00011 = 1:8
00010 = 1:4
00001 = 1:2
00000 = 1:1

bit 15 **FSCMEN:** Fail-Safe Clock Monitor Enable
1 = FSCM Enabled
0 = FSCM Disabled

bit 14 **CKSWEN:** Software Clock Switching Enable
1 = Software Clock Switching Enabled
0 = Software Clock Switching Disabled

bit 13 **WAKE2SPD:** 2-Speed startup enabled in Sleep mode bit
1 =When the device EXITS Sleep Mode, the SYS_CLK will be from FRC until the selected clock is ready
0 =When the device EXITS Sleep Mode, the SYS_CLK will be from the selected clock.

bit 12 **SOSCSEL:** SOSC Selection Configuration bit
1 = Crystal (SOSCI/SOSCO) mode
0 = Digital (SCLKI) mode

bit 11-10 **WDTRMCS<1:0>:** WDT RUN Mode Clock Select
11 = LPRC
10 = Module PB clock
01 = Module PB clock
00 = Module PB clock

bit 9-8 **POSCMOD<1:0>:** Primary Oscillator Configuration bits
11 = Primary oscillator disabled
10 = HS oscillator mode selected
01 = HS oscillator mode selected
00 = HS oscillator mode selected

bit 7-6 **Unimplemented:** Read as '0'

bit 5-3 **DMTINTV<2:0>:** Dead Man Timer Count Window Interval bits
000 = Window/interval value is zero counter value
001 = Window/interval value is 1/2 counter value
010 = Window/interval value is 1/4 counter value
011 = Window/interval value is 1/8 counter value
100 = Window/interval value is 1/16 counter value
101 = Window/interval value is 1/32 counter value
110 = Window/interval value is 1/64 counter value
111 = Window/interval value is 1/128 counter value

bit 2-0 **Unimplemented:** Read as '0'

 © 2020 Microchip Technology Inc.

REGISTER 37-4: CFGCON3: CONFIGURATION CONTROL REGISTER 3

Bit Range	Bit 31/23/15/7	Bit 30/22/14/6	Bit 29/21/13/5	Bit 28/20/12/4	Bit 27/19/11/3	Bit 26/18/10/2	Bit 25/17/9/1	Bit 24/16/8/0
31:24	U-0	U-0	U-0	U-0	U-0	U-0	U-0	U-0
	—	—	—	—	—	—	—	—
23:16	U-0	U-0	U-0	U-0	U-0	U-0	R/W-0	R/W-0
	—	—	—	—	—	—	BTPLLPOSTDIV2<5:4>	
15:8	R/W-0	R/W-0	R/W-0	R/W-0	R/W-0	R/W-0	R/W-0	R/W-0
	BTPLLPOSTDIV2<3:0>				SPLLPOSTDIV2<5:2>			
7:0	R/W-0	R/W-0	R/W-0	R/W-0	R/W-0	R/W-0	R/W-0	R/W-0
	SPLLPOSTDIV2<1:0>		ETHPLLPOSTDIV2<5:0>					

Legend:			
R = Readable bit	W = Writable bit	U = Unimplemented bit, read as '0'	
-n = Value at POR	'1' = Bit is set	'0' = Bit is cleared	x = Bit is unknown

bit 31-18 **Unimplemented:** Read as '0'

bit 17-12 **BTPLLPOSTDIV2[5:0]:** BTPLL Post Divider bits for controlling auxiliary second PLL clock output.
$1 \le xPLLPOSTDIV2 \le 63$, value of 0 is unused.

bit 11-6 **SPLLPOSTDIV2[5:0]:** SPLL Post Divider bits for controlling auxiliary second PLL clock output.
$1 \le xPLLPOSTDIV2 \le 63$, value of 0 is unused.

bit 5-0 **ETHPLLPOSTDIV2[5:0]:** EWPLL Post Divider bits for controlling second PLL clock output for Wi-Fi block.
$1 \le xPLLPOSTDIV2 \le 63$, value of 0 is unused.

REGISTER 37-5: CFGCON4(L): CONFIGURATION CONTROL REGISTER 4

Bit Range	Bit 31/23/15/7	Bit 30/22/14/6	Bit 29/21/13/5	Bit 28/20/12/4	Bit 27/19/11/3	Bit 26/18/10/2	Bit 25/17/9/1	Bit 24/16/8/0
31:24	U-0	R/W/L-0	U-0	U-0	U-0	U-0	U-0	U-0
	—	SOSCEN	—	—	—	—	—	—
23:16	U-0	U-0	U-0	U-0	U-0	U-0	U-0	U-0
	—	—	—	—	—	—	—	—
15:8	U-0	U-0	U-0	U-0	U-0	U-0	U-0	U-0
	—	—	—	—	—	—	—	—
7:0	R/W/L-0	R/W/L-0	R/W/L-0	R/W/L-0	R/W/L-0	R/W/L-0	R/W/L-0	R/W/L-0
	SOSCCFG<7:0>							

Legend:			
R = Readable bit	W = Writable bit	U = Unimplemented bit, read as '0'	
-n = Value at POR	'1' = Bit is set	'0' = Bit is cleared	L = Lockable bit

bit 31 **Unimplemented:** Read as '0'

bit 30 **SOSCEN:** Low-Power (Secondary) Oscillator Enable bit
1 = Enable low-power (secondary) oscillator, also at Reset
0 = Disable low-power (secondary) oscillator

bit 29-8 **Unimplemented:** Read as '0'

bit 7-0 **SOSCCFG<7:0>:** SOSC Configuration bits

 © 2020 Microchip Technology Inc.

REGISTER 37-6: CFGPG: PERMISSION GROUP CONFIGURATION REGISTER

Bit Range	Bit 31/23/15/7	Bit 30/22/14/6	Bit 29/21/13/5	Bit 28/20/12/4	Bit 27/19/11/3	Bit 26/18/10/2	Bit 25/17/9/1	Bit 24/16/8/0
31:24	U-0	U-0	U-0	U-0	U-0	U-0	U-0	U-0
	—	—	—	—	—	—	—	—
23:16	R/W/L-0	R/W/L-0	R/W/L-0	R/W/L-0	R/W/L-0	R/W/L-0	R/W/L-0	R/W/L-0
	USBPG<1:0>		SQIPG<1:0>		ETHPG<1:0>		CRY1PG<1:0>	
15:8	R/W/L-0	R/W/L-0	R/W/L-0	R/W/L-0	R/W/L-0	R/W/L-0	R/W/L-0	R/W/L-0
	CAN2PG<1:0>		CAN1PG<1:0>		ADCPG<1:0>		WIFIPG<1:0>	
7:0	R/W/L-0	R/W/L-0	R/W/L-0	R/W/L-0	R/W/L-0	R/W/L-0	R/W/L-0	R/W/L-0
	ICDJPG<1:0>		DMAPG<1:0>		FCPG<1:0>		CPUPG<1:0>	

Legend:			
R = Readable bit	W = Writable bit	U = Unimplemented bit, read as '0'	
-n = Value at POR	'1' = Bit is set	'0' = Bit is cleared	L = Lockable bit

bit 31-24 **Unimplemented:** Read as '0'

bit 23-22 **USBPG<1:0>:** USB Permission Group bits
11 = Initiator is assigned to Permission Group 3
10 = Initiator is assigned to Permission Group 2
01 = Initiator is assigned to Permission Group 1
00 = Initiator is assigned to Permission Group 0

bit 21-20 **SQIPG<1:0>:** SQI Permission Group bits
11 = Initiator is assigned to Permission Group 3
10 = Initiator is assigned to Permission Group 2
01 = Initiator is assigned to Permission Group 1
00 = Initiator is assigned to Permission Group 0

bit 19-18 **ETHPG<1:0>:** ETH Permission Group bits
11 = Initiator is assigned to Permission Group 3
10 = Initiator is assigned to Permission Group 2
01 = Initiator is assigned to Permission Group 1
00 = Initiator is assigned to Permission Group 0

bit 17-16 **CRY1PG<1:0>:** CRY1 Permission Group bits
11 = Initiator is assigned to Permission Group 3
10 = Initiator is assigned to Permission Group 2
01 = Initiator is assigned to Permission Group 1
00 = Initiator is assigned to Permission Group 0

bit 15-14 **CAN2PG<1:0>:** CAN2 Permission Group bits
11 = Initiator is assigned to Permission Group 3
10 = Initiator is assigned to Permission Group 2
01 = Initiator is assigned to Permission Group 1
00 = Initiator is assigned to Permission Group 0

bit 13-12 **CAN1PG<1:0>:** CAN1 Permission Group bits
11 = Initiator is assigned to Permission Group 3
10 = Initiator is assigned to Permission Group 2
01 = Initiator is assigned to Permission Group 1
00 = Initiator is assigned to Permission Group 0

Note: The CPU as System Bus Initiator will use the permission group indicated in the GuestID bits of the CPU core. These bits change based on some CPU operations, such as interrupts. Refer to *Series 5 Warrior M-class CPU core resources* which is available at: www.imgtec.com.

REGISTER 37-6: CFGPG: PERMISSION GROUP CONFIGURATION REGISTER

bit 11-10 **ADCPG<1:0>:** ADC Permission Group bits
11 = Initiator is assigned to Permission Group 3
10 = Initiator is assigned to Permission Group 2
01 = Initiator is assigned to Permission Group 1
00 = Initiator is assigned to Permission Group 0

bit 9-8 **WIFIPG<1:0>:** Wi-Fi Permission Group bits
11 = Initiator is assigned to Permission Group 3
10 = Initiator is assigned to Permission Group 2
01 = Initiator is assigned to Permission Group 1
00 = Initiator is assigned to Permission Group 0

bit 7-6 **ICDJPG<1:0>:** ICD-JTAG Permission Group bits
11 = Initiator is assigned to Permission Group 3
10 = Initiator is assigned to Permission Group 2
01 = Initiator is assigned to Permission Group 1
00 = Initiator is assigned to Permission Group 0

bit 5-4 **DMAPG<1:0>:** DMA Permission Group bits
11 = Initiator is assigned to Permission Group 3
10 = Initiator is assigned to Permission Group 2
01 = Initiator is assigned to Permission Group 1
00 = Initiator is assigned to Permission Group 0

bit 3-2 **FCPG<1:0>:** FC Permission Group bits
11 = Initiator is assigned to Permission Group 3
10 = Initiator is assigned to Permission Group 2
01 = Initiator is assigned to Permission Group 1
00 = Initiator is assigned to Permission Group 0

bit 1-0 **CPUPG<1:0>:** CPU (Code) Permission Group bits
11 = Initiator is assigned to Permission Group 3
10 = Initiator is assigned to Permission Group 2
01 = Initiator is assigned to Permission Group 1
00 = Initiator is assigned to Permission Group 0

Note: The CPU as System Bus Initiator will use the permission group indicated in the GuestID bits of the CPU core. These bits change based on some CPU operations, such as interrupts. Refer to *Series 5 Warrior M-class CPU core resources* which is available at: www.imgtec.com.

 © 2020 Microchip Technology Inc.

REGISTER 37-7: DEVID: DEVICE AND REVISION ID REGISTER

Bit Range	Bit 31/23/15/7	Bit 30/22/14/6	Bit 29/21/13/5	Bit 28/20/12/4	Bit 27/19/11/3	Bit 26/18/10/2	Bit 25/17/9/1	Bit 24/16/8/0
31:24	R	R	R	R	R	R	R	R
	VER<3:0>				DEVID<27:24>			
23:16	R	R	R	R	R	R	R	R
	DEVID<23:16>							
15:8	R	R	R	R	R	R	R	R
	DEVID<15:8>							
7:0	R	R	R	R	R	R	R	R
	DEVID<7:0>							

Legend:			
R = Readable bit	W = Writable bit	U = Unimplemented bit, read as '0'	
-n = Value at POR	'1' = Bit is set	'0' = Bit is cleared	x = Bit is unknown

bit 31-28 **VER<3:0>:** Revision Identifier bits

bit 27-0 **DEVID<27:0>:** Device ID

REGISTER 37-8: USERID(L): USER UNIQUE ID REGISTER

Bit Range	Bit 31/23/15/7	Bit 30/22/14/6	Bit 29/21/13/5	Bit 28/20/12/4	Bit 27/19/11/3	Bit 26/18/10/2	Bit 25/17/9/1	Bit 24/16/8/0
31:24	U-0	U-0	U-0	U-0	U-0	U-0	U-0	U-0
	—	—	—	—	—	—	—	—
23-16	U-0	U-0	U-0	U-0	U-0	U-0	U-0	U-0
	—	—	—	—	—	—	—	—
15:8	R/W/L-0	R/W/L-0	R/W/L-0	R/W/L-0	R/W/L-0	R/W/L-0	R/W/L-0	R/W/L-0
	USERID<15:8>							
7:0	R/W/L-0	R/W/L-0	R/W/L-0	R/W/L-0	R/W/L-0	R/W/L-0	R/W/L-0	R/W/L-0
	USERID<8:0>							

Legend:			
R = Readable bit	W = Writable bit	U = Unimplemented bit, read as '0'	
-n = Value at POR	'1' = Bit is set	'0' = Bit is cleared	L = Lockable bit

bit 31-16 **Unimplemented:** Read as '0'

bit 15-0 **USERID:** User unique ID, readable using the JTAG `USERID` instruction.

REGISTER 37-9: SYSKEY: SYSTEM KEY REGISTER

Bit Range	Bit 31/23/15/7	Bit 30/22/14/6	Bit 29/21/13/5	Bit 28/20/12/4	Bit 27/19/11/3	Bit 26/18/10/2	Bit 25/17/9/1	Bit 24/16/8/0
31:24	R/W-0	R/W-0	R/W-0	R/W-0	R/W-0	R/W-0	R/W-0	R/W-0
	SYSKEY<31:24>							
23-16	R/W-0	R/W-0	R/W-0	R/W-0	R/W-0	R/W-0	R/W-0	R/W-0
	SYSKEY<23:16>							
15:8	R/W-0	R/W-0	R/W-0	R/W-0	R/W-0	R/W-0	R/W-0	R/W-0
	SYSKEY<15:8>							
7:0	R/W-0	R/W-0	R/W-0	R/W-0	R/W-0	R/W-0	R/W-0	R/W-0
	SYSKEY<8:0>							

Legend:			
R = Readable bit	W = Writable bit	U = Unimplemented bit, read as '0'	
-n = Value at POR	'1' = Bit is set	'0' = Bit is cleared	x = Bit is unknown

bit 31-0 **SYSKEY:** System Key
Keys are written to this register as part of a sequence to unlock system critical registers.

 © 2020 Microchip Technology Inc.

TABLE 37-2: BOOT CONFIGURATION SUMMARY

Virtual Address (BF80_#)	Register Name	Bit Range	Bits															All Resets
			31/15	30/14	29/13	28/12	27/11	26/10	25/9	24/8	23/7	22/6	21/5	20/4	19/3	18/2	17/1	16/0	
0100	BCFG0	31:16	BINFO-VALID0	—	SIGN	CP	—	—	—	—	—	—	—	—	—	—	—	—	x000
		15:0	—	—	—	—	—	—	—	—	—	—	—	—	BOOTISA	—	PCSC-MODE	BUHSW	000x

Legend: x = unknown value on Reset; — = Reserved, read as '0'. Reset values are shown in hexadecimal.

REGISTER 37-10: BCFG0: BOOT CONFIGURATION 0 REGISTER

Bit Range	Bit 31/23/15/7	Bit 30/22/14/6	Bit 29/21/13/5	Bit 28/20/12/4	Bit 27/19/11/3	Bit 26/18/10/2	Bit 25/17/9/1	Bit 24/16/8/0
31:24	R-cfg	R-0	R-cfg	R-cfg	R-0	R-0	R-0	R-0
	BINFOVALID0	—	SIGN	CP	—	—	—	—
23:16	R-0	R-0	R-0	R-0	R-0	R-0	R-0	R-0
	—	—	—	—	—	—	—	—
15:8	R-0	R-0	R-0	R-0	R-0	R-0	R-0	R-0
	—	—	—	—	—	—	—	—
7:0	R-0	R-0	R-0	R-0	R-cfg	R-0	R-cfg	R-cfg
	—	—	—	—	BOOTISA	—	PCSCMODE	BUHSW

Legend:		
R = Readable bit	W = Writable bit	U = Unimplemented bit, read as '0'
cfg = Configurable at Reset	'1' = Bit is set	'0' = Bit is cleared

bit 31 **BINFOVALID0:** First 256-bit BCFG Information Valid
1 = Untrusted, Flash values ignored and safe values used
0 = Trusted, loaded from Flash

Note: This bit to be programmed to zero for proper device operation

bit 30 **Unimplemented:** Read as '0'

bit 29 **SIGN:** Flash SIGN bit
1 = Unsigned
0 = Signed

bit 28 **CP:** Boot Code Protect
0 = Protection Disabled
1 = Protection Enabled

bit 27-4 **Unimplemented:** Read as '0'

bit 3 **BOOTISA:** Boot ISA Selection
1 = Boot code and exception code is MIPS32
0 = Boot code and exception code is microMIPS

Note: The BOOTISA bit does not determine the initial ISA for boots using EJTAGBOOT, but only for normal (non-debug) CPU boots. The initial ISA for boots using EJTAGBOOT is determined by the ECR.ISAOnDebug EJTAG register bit.

bit 2 **Unimplemented:** Read as '0'

bit 1 **PCSCMODE:** PCHE Single Cache Mode
1 = PCHE ICache only. CPU instructions (code, data) go to PCHE ICache only.
0 = PCHE ICache and DCache. CPU opcodes go to PCEHE ICache port and data goes to PCHE DCache port.

bit 0 **BUHSW:** This bit is programmed to '0' only.

37.3 On-Chip Voltage Regulator

The core and digital logic for all PIC32MZ W1 devices is designed to operate at a nominal 1.2V. To simplify system designs, devices in the PIC32MZ W1 family incorporate an on-chip regulator providing the required core logic voltage from VDD.

37.3.1 ON-CHIP REGULATOR AND POR

It takes a fixed delay for the on-chip regulator to generate an output. During this time, designated as TPU, code execution is disabled. TPU is applied every time the device resumes operation after any power-down, including Sleep mode.

37.3.2 ON-CHIP REGULATOR AND BOR

PIC32MZ W1 devices also have a simple brown-out capability. If the voltage supplied to the regulator is inadequate to maintain a regulated level, the regulator Reset circuitry will generate a Brown-out Reset. This event is captured by the BOR flag bit (RCON<1>). The brown-out voltage levels are specific in **Section 40.1.1 "DC Characteristics"**.

37.4 On-chip Temperature Sensor

PIC32MZ W1 devices include a temperature sensor that provides accurate measurement of a device's junction temperature (see **Section 40.1.2 "AC Characteristics and Timing Parameters"** for more information).

The temperature sensor is connected to the ADC module and can be measured using the shared S&H circuit (see **Section 29.0 "12-bit High-Speed Successive Approximation Register (SAR) ADC"** for more information).

37.5 Programming and Diagnostics

PIC32MZ W1 devices provide a complete range of programming and diagnostic features that can increase the flexibility of any application using them. These features allow system designers to include:

- Simplified field programmability using two-wire In-Circuit Serial Programming™ (ICSP™) interfaces
- Debugging using ICSP
- Programming and debugging capabilities using the EJTAG extension of JTAG
- JTAG boundary scan testing for device and board diagnostics
- Programming and debugging capability using Trace controller

FIGURE 37-1: BLOCK DIAGRAM OF PROGRAMMING, DEBUGGING AND TRACE PORTS

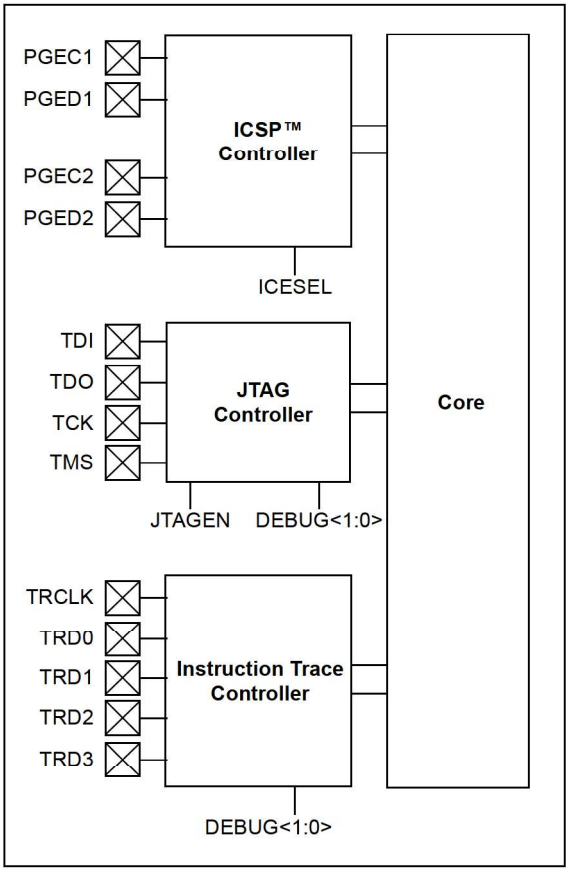

 © 2020 Microchip Technology Inc.

38.0 INSTRUCTION SET

The PIC32MZ W1 family supports both the microMIPS and MIPS32 instruction sets. Therefore all firmware must be written using microMIPS instructions, MIPS32 instructions, or a combination of both.

As dynamic switching between microMIPS and MIPS32 is possible (using the JALX and JALX32 instructions), the user need to only specify the ISA to be used for the first instruction after boot.

During a normal boot, the CPU fetches its first instruction from the reset vector at 0xBFC0_0000. The ISA for this instruction is specified using the BCFG0.BOOTISA bit. On a blank device, the reset value of the BCFG0.BOOTISA is '1', which places the device in MIPS32 instruction mode on exit from reset. However, it is assumed that on programming of the boot code, the BCFG0.BOOTISA bit is also programmed at the same time to match the instruction set of the boot code.The PIC32MZ W1 device family *does not* support the following features:

- Core extend instructions
- Coprocessor 2 instructions

Note: Refer to *"MIPS32® Architecture for Programmers Volume II: The MIPS32® Instruction Set"* for more information.

NOTES:

 © 2020 Microchip Technology Inc.

39.0 DEVELOPMENT SUPPORT

The PIC® MCUs and dsPIC® Digital Signal Controllers (DSC) are supported with a full range of software and hardware development tools:

- Integrated Development Environment
  - MPLAB® X IDE Software
- Compilers/Assemblers/Linkers
  - MPLAB XC Compiler
  - MPASM™ Assembler
  - MPLINK™ Object Linker/ MPLIB™ Object Librarian
  - MPLAB Assembler/Linker/Librarian for Various Device Families
- Simulators
  - MPLAB X SIM Software Simulator
- Emulators
  - MPLAB REAL ICE™ In-Circuit Emulator
- In-Circuit Debuggers (ICD)/Programmers
  - MPLAB ICD 3/MPLAB ICD 4
  - PICkit™ 3/PICkit™ 4
- Device Programmers
  - MPLAB PM3 Device Programmer
- Low-Cost Demonstration/Development Boards, Evaluation Kits and Starter Kits
- Third-party development tools

39.1 MPLAB X Integrated Development Environment Software

The MPLAB X IDE is a single, unified Graphical User Interface (GUI) for Microchip and third-party software, and hardware development tool that runs on Windows®, Linux and Mac OS® X. Based on the NetBeans IDE, MPLAB X IDE is an entirely new IDE with a host of free software components and plug-ins for high-performance application development and debugging. Moving between tools and upgrading from software simulators to hardware debugging and programming tools is simple with the seamless user interface.

With complete project management, visual call graphs, a configurable watch window and a feature-rich editor that includes code completion and context menus, MPLAB X IDE is flexible and friendly enough for new users. With the ability to support multiple tools on multiple projects with simultaneous debugging, MPLAB X IDE is also suitable for the needs of experienced users.

Feature-Rich Editor:

- Color syntax highlighting
- Smart code completion makes suggestions and provides hints as you type
- Automatic code formatting based on user-defined rules
- Live parsing

User-Friendly, Customizable Interface:

- Fully customizable interface: toolbars, toolbar buttons, windows, window placement, etc.
- Call graph window

Project-Based Workspaces:

- Multiple projects
- Multiple tools
- Multiple configurations
- Simultaneous debugging sessions

File History and Bug Tracking:

- Local file history feature
- Built-in support for Bugzilla issue tracker

39.2 MPLAB XC Compilers

The MPLAB XC Compilers are complete ANSI C compilers for all of Microchip's 8, 16, and 32-bit MCU and DSC devices. These compilers provide powerful integration capabilities, superior code optimization and ease of use. MPLAB XC Compilers run on Windows, Linux or MAC OS X.

For easy source level debugging, the compilers provide debug information that is optimized to the MPLAB X IDE.

The free MPLAB XC Compiler editions support all devices and commands, with no time or memory restrictions, and offer sufficient code optimization for most applications.

MPLAB XC Compilers include an assembler, linker and utilities. The assembler generates relocatable object files that can then be archived or linked with other relocatable object files and archives to create an executable file. MPLAB XC Compiler uses the assembler to produce its object file. Notable features of the assembler include:

- Support for the entire device instruction set
- Support for fixed-point and floating-point data
- Command-line interface
- Rich directive set
- Flexible macro language
- MPLAB X IDE compatibility

39.3 MPASM Assembler

The MPASM Assembler is a full-featured, universal macro assembler for PIC10/12/16/18 MCUs.

The MPASM Assembler generates relocatable object files for the MPLINK Object Linker, Intel® standard HEX files, MAP files to detail memory usage and symbol reference, absolute LST files that contain source lines and generated machine code, and COFF files for debugging.

The MPASM Assembler features include:

- Integration into MPLAB X IDE projects
- User-defined macros to streamline assembly code
- Conditional assembly for multipurpose source files
- Directives that allow complete control over the assembly process

39.4 MPLINK Object Linker/ MPLIB Object Librarian

The MPLINK Object Linker combines relocatable objects created by the MPASM Assembler. It can link relocatable objects from precompiled libraries, using directives from a linker script.

The MPLIB Object Librarian manages the creation and modification of library files of precompiled code. When a routine from a library is called from a source file, only the modules that contain that routine will be linked in with the application. This allows large libraries to be used efficiently in many different applications.

The object linker/library features include:

- Efficient linking of single libraries instead of many smaller files
- Enhanced code maintainability by grouping related modules together
- Flexible creation of libraries with easy module listing, replacement, deletion and extraction

39.5 MPLAB Assembler, Linker and Librarian for Various Device Families

MPLAB Assembler produces relocatable machine code from symbolic assembly language for PIC24, PIC32 and dsPIC DSC devices. MPLAB XC Compiler uses the assembler to produce its object file. The assembler generates relocatable object files that can then be archived or linked with other relocatable object files and archives to create an executable file. Notable features of the assembler include:

- Support for the entire device instruction set
- Support for fixed-point and floating-point data
- Command-line interface
- Rich directive set
- Flexible macro language
- MPLAB X IDE compatibility

 © 2020 Microchip Technology Inc.

39.6 MPLAB X SIM Software Simulator

The MPLAB X SIM Software Simulator allows code development in a PC-hosted environment by simulating the PIC MCUs and dsPIC DSCs on an instruction level. On any given instruction, the data areas can be examined or modified and stimuli can be applied from a comprehensive stimulus controller. Registers can be logged to files for further run-time analysis. The trace buffer and logic analyzer display extend the power of the simulator to record and track program execution, actions on I/O, most peripherals and internal registers.

The MPLAB X SIM Software Simulator fully supports symbolic debugging using the MPLAB XC Compilers, and the MPASM and MPLAB Assemblers. The software simulator offers the flexibility to develop and debug code outside of the hardware laboratory environment, making it an excellent, economical software development tool.

39.7 MPLAB REAL ICE In-Circuit Emulator System

The MPLAB REAL ICE In-Circuit Emulator System is Microchip's next generation high-speed emulator for Microchip Flash DSC and MCU devices. It debugs and programs all 8, 16 and 32-bit MCU, and DSC devices with the easy-to-use, powerful GUI of the MPLAB X IDE.

The emulator is connected to the design engineer's PC using a high-speed USB 2.0 interface and is connected to the target with either a connector compatible with in-circuit debugger systems (RJ-11) or with the new high-speed, noise tolerant, Low-Voltage Differential Signal (LVDS) interconnection (CAT5).

The emulator is field upgradable through future firmware downloads in MPLAB X IDE. MPLAB REAL ICE offers significant advantages over competitive emulators including full-speed emulation, run-time variable watches, trace analysis, complex breakpoints, logic probes, a ruggedized probe interface and long (up to three meters) interconnection cables.

39.8 MPLAB ICD 3 and MPLAB ICD 4 In-Circuit Debugger System

The MPLAB ICD 3 and MPLAB ICD 4 In-Circuit Debugger are Microchip's most cost-effective, high-speed hardware debugger/programmer for Microchip Flash DSC and MCU devices. It debugs and programs PIC Flash MCUs and dsPIC DSCs with the powerful, yet easy-to-use GUI of the MPLAB IDE.

The MPLAB ICD 3 or MPLAB ICD 4 In-Circuit Debugger probe is connected to the PC using a high-speed USB 2.0 interface and can be connected to the target via a Microchip debug (RJ-11) connector (compatible with MPLAB ICD 2 and MPLAB REAL ICE systems). MPLAB ICD 3 and MPLAB ICD 4 supports all MPLAB ICD 2 headers.

39.9 PICkit 3 and PICkit 4 In-Circuit Debugger/Programmer

The MPLAB PICkit 3 and PICkit 4 In-Circuit Debugger/Programmer are hardware debugger/programmer for PIC and dsPIC Flash MCUs at a most affordable price point using the powerful GUI of the MPLAB IDE.

The MPLAB PICkit 3 or PICkit 4 is connected to the PC using a full-speed USB interface and can be connected to the target via a Microchip debug (RJ-11) connector (compatible with MPLAB ICD 3, MPLAB ICD 4 and MPLAB REAL ICE). The connector uses two device I/O pins and the Reset line to implement In-Circuit Debugging and In-Circuit Serial Programming™ (ICSP™).

39.10 MPLAB PM3 Device Programmer

The MPLAB PM3 Device Programmer is a universal, CE compliant device programmer with programmable voltage verification at V_{DDMIN} and V_{DDMAX} for maximum reliability. It features a large LCD display (128 x 64) for menus and error messages, and a modular, detachable socket assembly to support various package types. The ICSP cable assembly is included as a standard item. In Stand-Alone mode, the MPLAB PM3 Device Programmer can read, verify and program PIC devices without a PC connection. It can also set code protection in this mode. The MPLAB PM3 connects to the host PC via an RS-232 or USB cable. The MPLAB PM3 has high-speed communications and optimized algorithms for quick programming of large memory devices, and incorporates an MMC card for file storage and data applications.

39.11 Demonstration/Development Boards, Evaluation Kits, and Starter Kits

A wide variety of demonstration, development and evaluation boards for various PIC MCUs and dsPIC DSCs allows quick application development on fully functional systems. Most boards include prototyping areas for adding custom circuitry and provide application firmware and source code for examination and modification.

The boards support a variety of features, including LEDs, temperature sensors, switches, speakers, RS-232 interfaces, LCD displays, potentiometers and additional EEPROM memory.

The demonstration and development boards can be used in teaching environments, for prototyping custom circuits and for learning about various MCU applications.

In addition to the PICDEM™ and dsPICDEM™ demonstration/development board series of circuits, Microchip has a line of evaluation kits and demonstration software for analog filter design, KEELOQ® security ICs, CAN, IrDA®, PowerSmart battery management, SEEVAL® evaluation system, Sigma-Delta ADC, flow rate sensing, plus many more.

Also available are starter kits that contain everything needed to experience the specified device. This usually includes a single application and debug capability, all on one board.

Check the Microchip website (www.microchip.com) for the complete list of demonstration, development and evaluation kits.

39.12 Third-Party Development Tools

Microchip also offers a great collection of tools from third-party vendors. These tools are carefully selected to offer good value and unique functionality.

- Device Programmers and Gang Programmers from companies, such as SoftLog and CCS
- Software Tools from companies, such as Gimpel and Trace Systems
- Protocol Analyzers from companies, such as Saleae and Total Phase
- Demonstration Boards from companies, such as MikroElektronika, Digilent® and Olimex
- Embedded Ethernet Solutions from companies, such as EZ Web Lynx, WIZnet and IPLogika®

 © 2020 Microchip Technology Inc.

40.0 ELECTRICAL SPECIFICATIONS

This chapter provides the electrical specifications and characteristics of the PIC32MZ W1 SoC and WFI32E01 module.

40.1 PIC32MZ W1 Electrical Specifications

The absolute maximum ratings for the PIC32MZ W1 devices are listed below. Exposure to these maximum rating conditions for extended periods may affect device reliability. Functional operation of the device at these or any other conditions, above the parameters indicated in the operation listings of this specification, is not implied.

Absolute Maximum Ratings

Ambient temperature under bias ..... -40°C to +105°C
Storage temperature ..... -65°C to +150°C
Voltage on V_{DD} with respect to V_{SS} ..... -0.3V to +4.0V
Voltage on any pin that is not 5V tolerant, with respect to V_{SS} (3) ..... -0.3V to (V_{DD} + 0.3V)
Voltage on any 5V tolerant pin with respect to V_{SS} when $V_{DD} \geq 2.3V$ (3) ..... -0.3V to (V_{DD} + 0.3V)
Voltage on any 5V tolerant pin with respect to V_{SS} when $V_{DD} < 2.3V$ (3) ..... -0.3V to +5.25V
Voltage on D+ or D- pin with respect to V_{USB3V3} ..... -0.3V to (V_{USB3V3} + 0.3V)
Voltage on V_{BUS} with respect to V_{SS} ..... -0.3V to +5.25V
Maximum current out of V_{SS} pin(s) ..... 240 mA
Maximum current into V_{DD} pin(s) (2) ..... 240 mA
Maximum current sunk/sourced by any 4x I/O pin (4) ..... 15 mA
Maximum current sunk/sourced by any 8x I/O pin (4) ..... 25 mA
Maximum current sunk by all ports ..... 150 mA
Maximum current sourced by all ports (2) ..... 150 mA

ESD Qualification:

Human Body Model (HBM) (JEDEC JS-001-2017) 2000V
Changed Device Model (CDM) (JEDEC JS-002-2018) 500V

Note 1: Stresses above those listed under **"Absolute Maximum Ratings"** may cause permanent damage to the device. This is a stress rating only and functional operation of the device at those or any other conditions, above those indicated in the operation listings of this specification, is not implied. Exposure to maximum rating conditions for extended periods may affect device reliability.

2: The maximum allowable current is a function of the device maximum power dissipation.

3: See Table 3 for the pin names of the 5V tolerant pins.

4: Characterized, but not tested. Refer to parameters DO10 and DO20 for the 4x and 8x I/O pin lists.

TABLE 40-1: THERMAL OPERATING CONDITIONS

Rating	Symbol	Min.	Typ.	Max.	Unit
Industrial Temperature Devices					
Operating junction temperature range	T_J	-40	—	+125	°C
Operating ambient temperature range	T_A	-40	—	+105	°C
Power dissipation: Internal chip power dissipation: $P_{INT} = V_{DD} \times (I_{DD} - \Sigma\ I_{OH})$ I/O pin power dissipation: $P_{I/O} = \Sigma\ (\{V_{DD} - V_{OH}\} \times I_{OH}) + \Sigma\ (V_{OL} \times I_{OL})$	P_D	$P_{INT} + P_{I/O}$			W
Maximum allowed power dissipation	P_{DMAX}	$(T_J - T_A)/\theta_{JA}$			W

TABLE 40-2: THERMAL PACKAGING CHARACTERISTICS

Characteristics	Symbol	Typ.	Max.	Unit	Notes
Package thermal resistance, 132-pin DQFN (10x10x0.9 mm)	θ_{JA}	24	—	°C/W	1

Note 1: Junction to ambient thermal resistance, Theta-$_{JA}$ (θ_{JA}) numbers are achieved by package simulations.

TABLE 40-3: RECOMMENDED OPERATING CONDITIONS

DC CHARACTERISTICS			Standard Operating Conditions: 2.97V to 3.63V (unless otherwise stated) Operating temperature -40°C ≤ T_A ≤ +105°C				
Param. No.	**Symbol**	**Characteristics**	**Min.**	**Typical**	**Max.**	**Units**	**Conditions**
DC10	V_{DD}	Supply voltage[1]	2.97	3.3	3.63	V	—
	V_{BAT}	Battery voltage range	V_{DD}	—	V_{DD}	V	—
	AV_{DD}	Analog supply voltage	V_{DD}	—	V_{DD}	V	—
	AV_{SS}	Analog ground voltage	V_{SS}	—	V_{SS}	V	—
	GNDDB	Common EDP ground reference	V_{SS}	V_{SS}	V_{SS}	V	—

Note 1: Overall functional device operation at $V_{BORMIN} < V_{DD} < V_{DDMIN}$ is guaranteed, but not characterized. All device Analog modules, such as ADC, etc., will function, but with degraded performance below V_{DDMIN}.

40.1.1 DC CHARACTERISTICS

TABLE 40-4: POR ELECTRICAL CHARACTERISTICS

DC CHARACTERISTICS			Standard Operating Conditions: 2.97V to 3.63V (unless otherwise stated) Operating temperature -40°C ≤ T_A ≤ +105°C				
Param. No.	**Symbol**	**Characteristics**	**Min.**	**Typ.**	**Max.**	**Units**	**Conditions**
DC16	V_{POR}	V_{DD} start voltage to ensure internal POR signal [1]	1.5	—	—	V	—
DC17	SV_{DD}	V_{DD} rise rate to ensure internal POR signal	0.03	—	0.115	V/ms	110-28.7 ms at 3.3V

Note 1: This is the limit to which V_{DD} must be lowered to ensure POR.

 © 2020 Microchip Technology Inc.

TABLE 40-5: BOR ELECTRICAL CHARACTERISTICS

DC CHARACTERISTICS			Standard Operating Conditions: 2.97V to 3.63V (unless otherwise stated) Operating temperature -40°C ≤ TA ≤ +105°C				
Param. No.	Symbol	Characteristics	Min.(1)	Typ.	Max.	Units	Conditions
BO10	VBOR	BOR event on VDD transition high-to-low(2)	2.75	—	2.8	V	—

Note 1: Parameters are for design guidance only and are not tested in manufacturing.

2: Overall functional device operation at VBORMIN < VDD < VDDMIN is tested, but not characterized. All device Analog modules, such as ADC, etc., will function, but with degraded performance below VDDMIN.

TABLE 40-6: OPERATING CURRENT (IDD, RF = OFF)(1)(2)

DC CHARACTERISTICS			Standard Operating Conditions: 2.97V to 3.63V (unless otherwise stated) Operating temperature -40°C ≤ TA ≤ +105ºC	
Param. No.	Typ.(3)	Max.	Units	Conditions
I/O OPERATING CURRENT (IDD): PERIPHERAL ENABLED (PMDx=0, ON (PBxDIV<15>)=1				
DC20a	7	—	mA	8 MHz (FRC)(4)
DC21a	12	—	mA	40 MHz (POSC in HS mode)
DC22a	23	—	mA	60 MHz (POSC in HS mode + SPLL)(4)
DC23a	26	—	mA	80 MHz (POSC in HS mode + SPLL)(4)
DC24	29	—	mA	100 MHz (POSC in HS mode + SPLL)(4)
DC25	32	—	mA	120 MHz (POSC in HS mode + SPLL)(4)
DC26	45	—	mA	200 MHz (POSC in HS mode + SPLL)(4)

Note 1: A device's IDD supply current is mainly a function of the operating voltage and frequency. Other factors, such as PBCLK (Peripheral Bus Clock) frequency, number of peripheral modules enabled, internal code execution pattern, execution from Program Flash memory vs. SRAM, I/O pin loading and switching rate, oscillator type, as well as, temperature, can have an impact on the current consumption.

2: The test conditions for IDD measurements are as follows:

- CPU, Flash Panel and SRAM data memory are operational.
- All peripheral modules are disabled (ON bit = 0) but the associated PMD bit is cleared.
- Sysclk: PBCLK= 1:2.
- WDT and FSCM are disabled.
- All I/O pins are configured as inputs and pulled to VSS.
- $\overline{\text{MCLR}}$ = VDD.

3: Data in the "Typical" column is at 3.3V, 25°C unless otherwise stated.

4: This parameter is characterized, but not tested in manufacturing.

TABLE 40-7: IDLE CURRENT (I_{IDLE}, RF = OFF)

DC CHARACTERISTICS			Standard Operating Conditions: 2.97V to 3.63V (unless otherwise stated) Operating temperature -40°C ≤ TA ≤ +105ºC	
Param. No.	**Typ.(2)**	**Max.**	**Units**	**Conditions**
I/O Operating Current (IDLE): Core OFF (PMDx=0, ON (PBxDIV<15>)=1(1)				
DC30	6	—	mA	8 MHz (FRC)(3)
DC31	11	—	mA	40 MHz (POSC in HS mode)
DC32	21	—	mA	60 MHz (POSC in HS mode + SPLL)(3)
DC33	23	—	mA	80 MHz (POSC in HS mode + SPLL)(3)
DC34	26	—	mA	100 MHz (POSC in HS mode + SPLL)(3)
DC35	28	—	mA	120 MHz (POSC in HS mode + SPLL)(3)
DC36	38	—	mA	200 MHz (POSC in HS mode + SPLL)(3)

Note 1: The test conditions for I_{IDLE} current measurements are as follows:
- Sysclk: PBCLK= 1:1.
- CPU in Idle mode (CPU core Halted).
- All peripheral modules are disabled (ON bit = 0), but the associated PMD bit is cleared.
- WDT and FSCM are disabled.
- All I/O pins are configured as inputs and pulled to V_{SS}.
- $\overline{MCLR}$ = V_{DD}.

2: Data in the "Typical" column is at 3.3V, TA=25°C unless otherwise stated.

3: This parameter is characterized, but not tested in manufacturing.

TABLE 40-8: POWER-DOWN CURRENT (I_{PD})

DC CHARACTERISTICS			Standard Operating Conditions: 2.97V to 3.63V (unless otherwise stated) Operating temperature -40°C ≤ TA ≤ +105ºC	
Param. No.	**Typ.(2)**	**Max.**	**Units**	**Conditions**
Power-Down Current (I_{PD}) (1)				
DC40k	4	—	mA	-40°C
DC40l	5	—	mA	25°C
DC40m	10	—	mA	85°C
DC40n	13	—	mA	105°C
Module Differential Current				
DC44a	5	—	mA	WDT current: ΔI_{WDT}(3)
DC44b	5	—	mA	RTCC + Timer1 with 32 kHz Crystal: ΔI_{RTCC}(3)
DC44c	5	—	mA	ADC: ΔI_{ADC}(3)

Note 1: The test conditions for I_{PD} current measurements are as follows:
- All peripheral modules and clocks shut down (ON = 0, PMDx = 1)
- CPU clock is disabled.
- All I/Os are configured as inputs and pulled low.
- WDT and FSCM are disabled.

2: Data in the "Typical" column is at 3.3V, TA=25°C unless otherwise stated.

3: The Δ current is the additional current consumed when the module is enabled. This current should be added to the base I_{PD} current.

 © 2020 Microchip Technology Inc.

TABLE 40-9: I/O PIN INPUT SPECIFICATIONS

DC CHARACTERISTICS			Standard Operating Conditions: 2.97V to 3.63V (unless otherwise stated) Operating temperature -40°C ≤ TA ≤ +105ºC				
Param. No.	**Symbol**	**Characteristics**	**Min.**	**Typ.(1)**	**Max.**	**Units**	**Conditions**
	VIL	**Input low voltage**					
DI10		I/O pins	VSS	—	0.2 * VDD	V	
DI18		SDAx, SCLx	VSS	—	0.3 * VDD	V	SMBus disabled(4)
DI19		SDAx, SCLx	VSS	—	0.8	V	SMBus enabled(4)
	VIH	**Input high voltage**					
DI20		I/O pins not 5V-tolerant	0.80 * VDD	—	VDD	V	(4)
		I/O pins 5V-tolerant with PMP	0.80 * VDD	—	5.5	V	(4)
		I/O pins 5V-tolerant	0.80 * VDD	—	5.5	V	
DI28a		SDAx, SCLx on non-5V tolerant pins	0.80 * VDD	—	VDD	V	SMBus disabled(4)
DI29a		SDAx, SCLx on non-5V tolerant pins	2.3	—	VDD	V	SMBus enabled, 2.3V ≤ VPIN ≤ 5.5(4)
DI28b		SDAx, SCLx on 5V tolerant pins	0.80 * VDD	—	5.5	V	SMBus disabled(4)
DI29b		SDAx, SCLx on 5V tolerant pins	2.3	—	5.5	V	SMBus enabled, 2.3V ≤ VPIN ≤ 5.5(4)
DI30	ICNPU	**Change notification pull-up current**	—	—	-40	µA	VDD = 3.3V, VPIN = VSS(3)
DI31	ICNPD	**Change notification pull-down current(4)**	40	—	—	µA	VDD = 3.3V, VPIN = VDD
	IIL	**Input leakage current(3)**					
DI50		I/O ports	—	—	±1	µA	VSS ≤ VPIN ≤ VDD, Pin at high-impedance
DI51		Analog input pins	—	—	±1	µA	VSS ≤ VPIN ≤ VDD, Pin at high-impedance
DI55		$\overline{\text{MCLR}}$(2)	—	—	±1	µA	VSS ≤ VPIN ≤ VDD
DI56		XTAL_IN	—	—	±1	µA	VSS ≤ VPIN ≤ VDD, HS mode

Note 1: Data in the "Typ." column is at 3.3V, +25°C unless otherwise stated.

2: The leakage current on the $\overline{\text{MCLR}}$ pin is strongly dependent on the applied voltage level. The specified levels represent normal operating conditions. Higher leakage current may be measured at different input voltages.

3: Negative current is defined as current sourced by the pin.

4: This parameter is characterized, but not tested in manufacturing.

TABLE 40-10: I/O PIN OUTPUT SPECIFICATIONS

DC CHARACTERISTICS			Standard Operating Conditions: 2.97V to 3.63V (unless otherwise stated) Operating temperature -40°C ≤ TA ≤ +105ºC				
Param. No.	**Symbol**	**Characteristic**	**Min.**	**Typ.**	**Max.**	**Units**	**Conditions(1)**
DO10	VOL	**Output low voltage** I/O pins: 4x sink driver pins - RA2-RA10, RA12-RA15, RB0-RB13, RC9-RC12, RK0-RK12	—	—	0.4	V	IOL ≤ 10 mA, VDD = 3.3V
		Output low voltage I/O pins: 8x sink driver pins - RA0, RA1, RA11, RC0, RC1,RC8, RC9, RC13, RC14, RC15, RK13, RK14	—	—	0.4	V	IOL ≤ 15 mA, VDD = 3.3V
DO20	VOH	**Output high voltage** I/O pins: 4x source driver pins - RA2-RA10, RA12-RA15, RB0-RB13, RC9-RC12, RK0-RK12	2.4	—	—	V	IOH ≥ -10 mA, VDD = 3.3V
		Output high voltage I/O pins: 8x source driver pins - RA0, RA1, RA11, RC0, RC1,RC8, RC9, RC13, RC14, RC15, RK13, RK14	2.4	—	—	V	IOH ≥ -15 mA, VDD = 3.3V
DO20a	VOH1	**Output high voltage** I/O pins: 4x source driver pins - RA2-RA10, RA12-RA15, RB0-RB13, RC9-RC12, RK0-RK12	1.5	—	—	V	IOH ≥ -14 mA, VDD = 3.3V
			2.0	—	—	V	IOH ≥ -12 mA, VDD = 3.3V
			3.0	—	—	V	IOH ≥ -7 mA, VDD = 3.3V
		Output high voltage I/O pins: 8x source driver pins - RA0, RA1, RA11, RC0, RC1,RC8, RC9, RC13, RC14, RC15, RK13, RK14	1.5	—	—	V	IOH ≥ -22 mA, VDD = 3.3V
			2.0	—	—	V	IOH ≥ -18 mA, VDD = 3.3V
			3.0	—	—	V	IOH ≥ -10 mA, VDD = 3.3V

Note 1: Parameters are characterized, but not tested in manufacturing.

 © 2020 Microchip Technology Inc.

40.1.2 AC CHARACTERISTICS AND TIMING PARAMETERS

The information contained in this section defines the PIC32MZ W1 device AC characteristics and timing parameters.

FIGURE 40-1: LOAD CONDITIONS FOR DEVICE TIMING SPECIFICATIONS

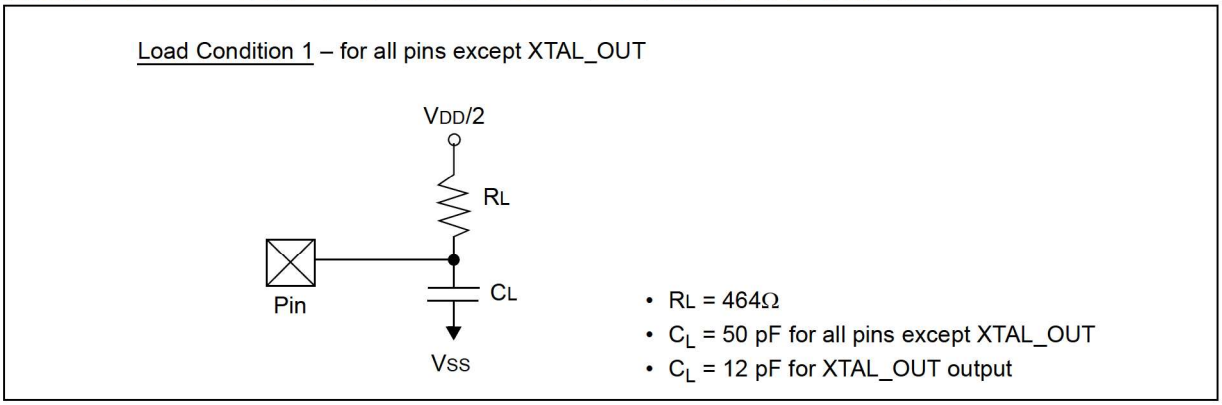

TABLE 40-11: CAPACITIVE LOADING REQUIREMENTS ON OUTPUT PINS

AC CHARACTERISTICS			Standard Operating Conditions: 2.97V to 3.63V (unless otherwise stated) Operating temperature -40°C ≤ TA ≤ +105ºC				
Param. No.	**Symbol**	**Characteristics**	**Min.**	**Typ.(1)**	**Max.**	**Units**	**Conditions**
DO56	CL	All I/O pins (except pins used as CxOUT)	—	—	50	pF	—
DO58	CB	SCLx, SDAx	—	—	400	pF	In I^2C mode
DO59	CSQI	All SQI pins	—	—	10	pF	—

Note 1: Data in the "Typ." column is at 3.3V, +25°C unless otherwise stated.

FIGURE 40-2: CRYSTAL OSCILLATOR TIMING CHARACTERISTICS

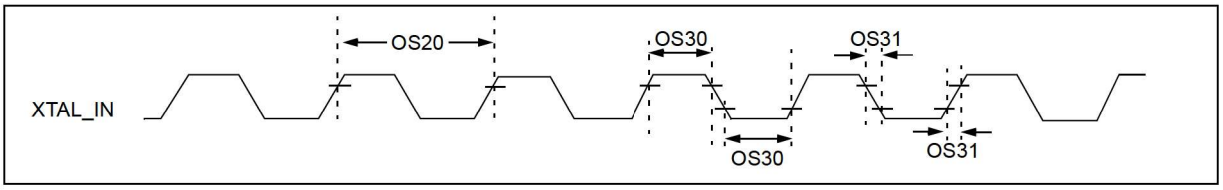

TABLE 40-12: CRYSTAL OSCILLATOR TIMING REQUIREMENTS

AC CHARACTERISTICS			Standard Operating Conditions: 2.97V to 3.63V (unless otherwise stated) Operating temperature -40°C ≤ TA ≤ +105ºC				
Param. No.	**Symbol**	**Characteristics**	**Min.**	**Typ.(3)**	**Max.**	**Units**	**Conditions**
OS13	Fosc	Primary oscillator crystal frequency(1,2)	—	40	—	MHz	—
	—	Frequency stability – temperature and aging(3)	-20	—	20	ppm	—
OS15	Fosc	Secondary oscillator crystal frequency(2)	—	32.768	—	kHz	SOSC
	—	Frequency stability – temperature and aging(3)	-100	—	100	ppm	—
OS20	TOSC	TOSC	—	1/FOSC	—	—	See parameter OS13 for FOSC value
OS40	TOST	Oscillator start-up timer period (Only applies to HS, HSPLL and SOSC Clock Oscillator modes)	—	1024	—	TOSC	—
OS41	TFSCM	Primary clock fail safe time-out period	—	2	—	ms	—
OS42	Gm	External oscillator transconductance	—	16	—	µA/V	VDD = 3.3V, TA = +25°C
—	Cosco	XTAL_OUT pin capacitive load	—	—	12	pF	VDD = 3.3V, TA = +25°C

Note 1: Crystal oscillator requirements:
- Crystal load capacitance = 12 pF
- ESR = 50 Ω
- Maximum Drive level = 200 µW

2: Correct oscillator and associated components selection are critical to meet these specifications.

3: This parameter is characterized, but not tested in manufacturing.

 © 2020 Microchip Technology Inc.

TABLE 40-13: SYSTEM TIMING REQUIREMENTS

AC CHARACTERISTICS			Standard Operating Conditions: 2.97V to 3.63V (unless otherwise stated) Operating temperature -40°C ≤ TA ≤ +105ºC				
Param. No.	**Symbol**	**Characteristics**	**Min.**	**Typ.**	**Max.**	**Units**	**Conditions**
OS51	FSYS	System frequency	DC	—	200	MHz	—
OS55a	FPB	Peripheral bus frequency	DC	—	100	MHz	—
OS56	FREF	Reference clock frequency	—	—	40	MHz	—

TABLE 40-14: PLL CLOCK TIMING SPECIFICATIONS

AC CHARACTERISTICS			Standard Operating Conditions: 2.97V to 3.63V (unless otherwise stated) Operating temperature -40°C ≤ TA ≤ +105ºC				
Param. No.	**Symbol**	**Characteristics(1)**	**Min.**	**Typ.**	**Max.**	**Units**	**Conditions**
OS50	FIN	PLL input frequency range	8	—	40	MHz	BTPLL mode
OS52	TLOCK	PLL start-up time (lock time)	—	—	256 x R	µs	R = Divide reference period
OS54	FVCO	PLL VCO frequency range	880	—	1600	MHz	—
	FPLL	PLL output frequency range	16	—	200	MHz	Non-bypass mode

Note 1: These parameters are characterized, but not tested in manufacturing.

TABLE 40-15: INTERNAL FRC ACCURACY

AC CHARACTERISTICS		Standard Operating Conditions: 2.97V to 3.63V (unless otherwise stated) Operating temperature-40°C ≤ TA ≤ +105ºC				
Param. No.	**Characteristics**	**Min.**	**Typ.**	**Max.**	**Units**	**Conditions**
Internal FRC Accuracy @ 8.00 MHz(1)						
F20	FRC	-0.6	—	+0.6	%	—

Note 1: Frequency calibrated at +25°C and 3.3V. The TUN bits (OSCTUN<5:0>) can be used to compensate for temperature drift.

TABLE 40-16: INTERNAL LPRC ACCURACY

AC CHARACTERISTICS		Standard Operating Conditions: 2.97V to 3.63V (unless otherwise stated) Operating temperature -40°C ≤ TA ≤ +105ºC				
Param. No.	**Characteristics**	**Min.**	**Typ.**	**Max.**	**Units**	**Conditions**
Internal LPRC @ 32.768 kHz(1)						
F21	LPRC	-7.7	—	+7.7	%	—

Note 1: Change of LPRC frequency as VDD changes.

FIGURE 40-3: I/O TIMING CHARACTERISTICS

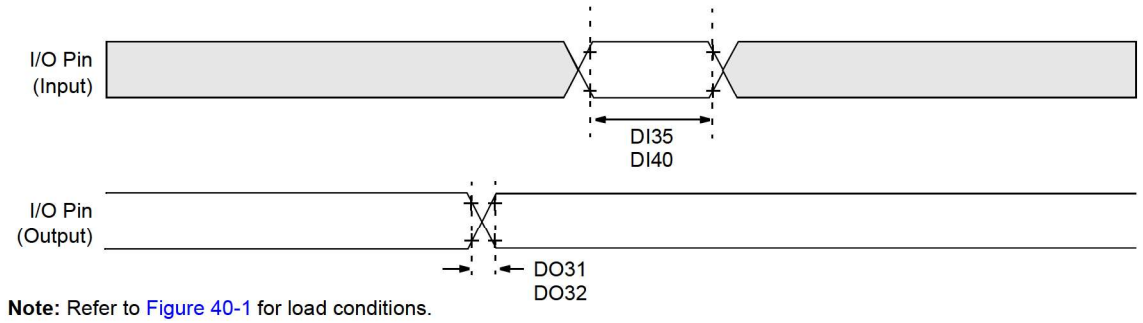

Note: Refer to Figure 40-1 for load conditions.

TABLE 40-17: I/O TIMING REQUIREMENTS

AC CHARACTERISTICS		Standard Operating Conditions: 2.97V to 3.63V (unless otherwise stated) Operating temperature -40°C ≤ TA ≤ +105ºC					
Param. No.	**Symbol**	**Characteristics(2)**	**Min.**	**Typ.(1)**	**Max.**	**Units**	**Conditions**
DO31	TIOR	**Port output rise time** I/O pins: 4x source driver pins - RA2-RA10, RA12-RA15, RB0-RB13, RC9-RC12, RK0-RK12	—	—	9.5	ns	CLOAD = 50 pF
			—	—	6	ns	CLOAD = 20 pF
		Port output rise time I/O pins: 8x source driver pins - RA0, RA1, RA11, RC0, RC1,RC8, RC9, RC13, RC14, RC15, RK13, RK14	—	—	8	ns	CLOAD = 50 pF
			—	—	6	ns	CLOAD = 20 pF
DO32	TIOF	**Port output fall time** I/O pins: 4x source driver pins - RA2-RA10, RA12-RA15, RB0-RB13, RC9-RC12, RK0-RK12	—	—	9.5	ns	CLOAD = 50 pF
			—	—	6	ns	CLOAD = 20 pF
		Port output fall time I/O pins: 8x source driver pins - RA0, RA1, RA11, RC0, RC1,RC8, RC9, RC13, RC14, RC15, RK13, RK14	—	—	8	ns	CLOAD = 50 pF
			—	—	6	ns	CLOAD = 20 pF
DI35	TINP	INTx pin high or low time	5	—	—	ns	—
DI40	TRBP	CNx high or low time (input)	5	—	—	ns	—

Note 1: Data in the "Typ." column is at 3.3V, +25°C unless otherwise stated.

2: This parameter is characterized, but not tested in manufacturing.

 © 2020 Microchip Technology Inc.

FIGURE 40-4: POWER-ON RESET TIMING CHARACTERISTICS

Clock Sources = (FRC, FRCDIV, FRCDIV16, FRCPLL and LPRC)

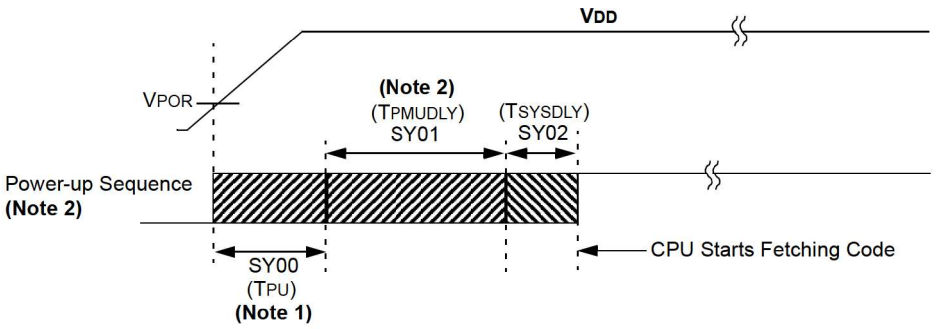

Clock Sources = (HS, HSPLL and Sosc)

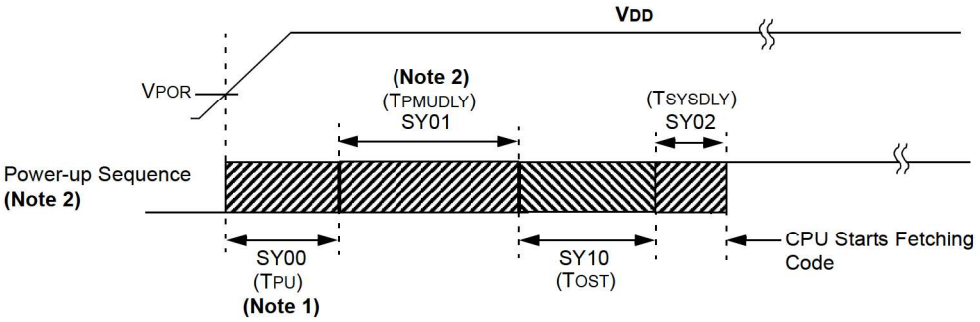

Note 1: The power-up period will be extended if the power-up sequence completes before the device exits from BOR (VDD < VBORmax).

2: SY01 is negligible when PMU is retained in MLDO mode.

FIGURE 40-5: EXTERNAL RESET TIMING CHARACTERISTICS

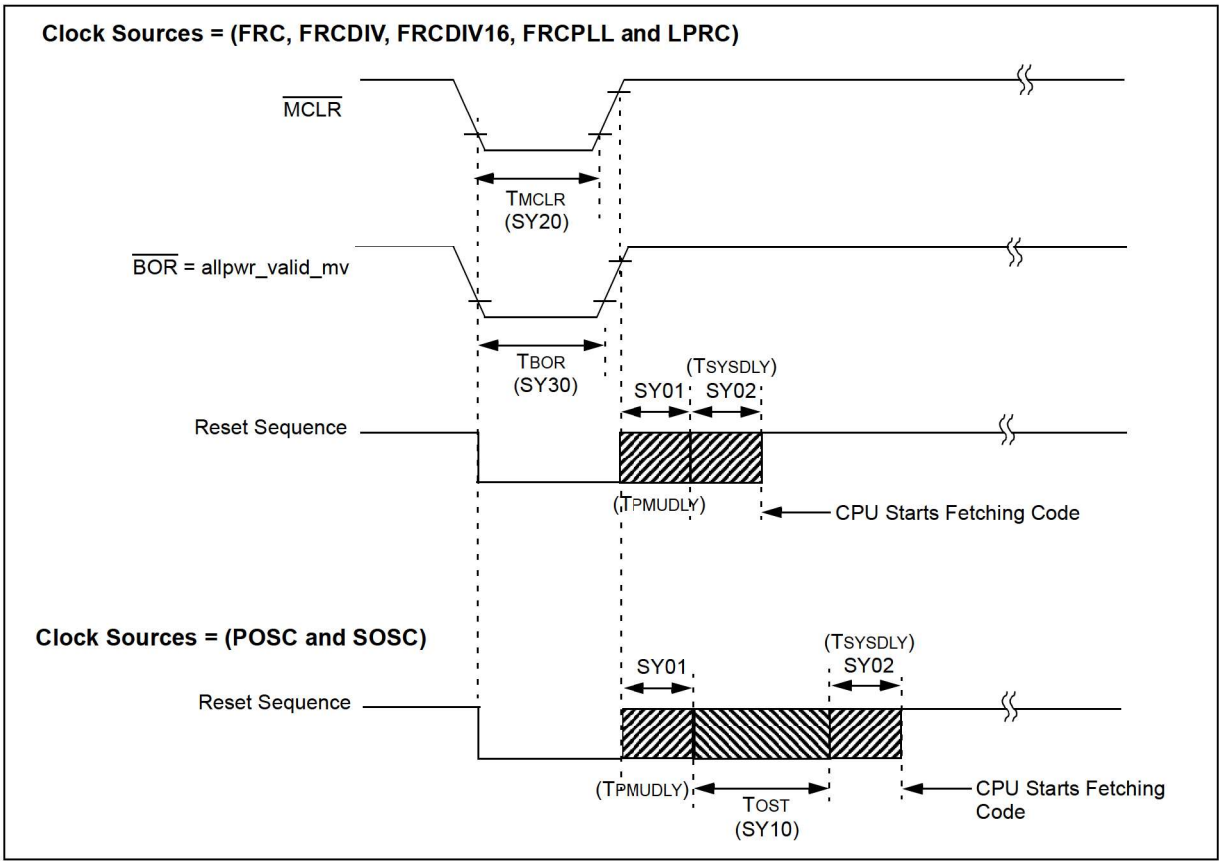

TABLE 40-18: RESETS TIMING

AC CHARACTERISTICS			Standard Operating Conditions: 2.97V to 3.63V (unless otherwise stated) Operating temperature -40°C ≤ TA ≤ +105ºC				
Param. No.	**Symbol**	**Characteristics(1)**	**Min.**	**Typ.(2)**	**Max.**	**Units**	**Conditions**
SY00	TPU	Power-up period internal voltage regulator enabled	—	400	600	µs	—
SY02	TSYSDLY	System delay period: time required to reload device configuration fuses plus SYSCLK delay before first instruction is fetched.	—	1 µs + 8 SYSCLK cycles	—	—	—
SY20	TMCLR	$\overline{\text{MCLR}}$ pulse width (low)	2	—	—	µs	—
SY30	TBOR	BOR pulse width (low)	—	1	—	µs	—

Note 1: These parameters are characterized, but not tested in manufacturing.
2: Data in the "Typ" column is at 3.3V, +25°C unless otherwise stated.

 © 2020 Microchip Technology Inc.

FIGURE 40-6: TIMER1-TIMER7 TIMING CHARACTERISTICS

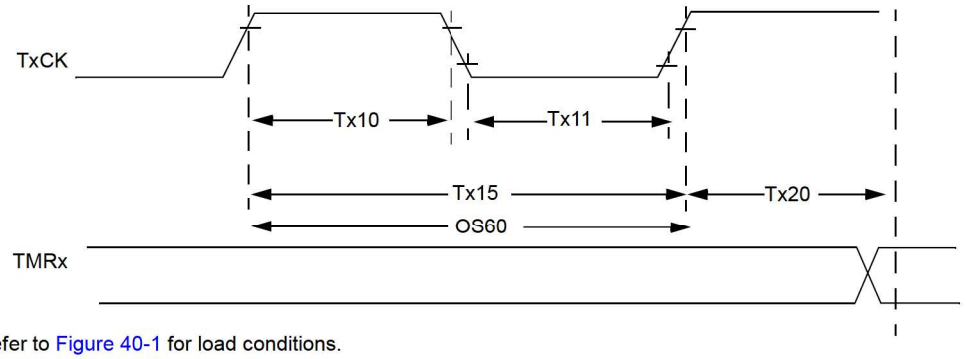

Note: Refer to Figure 40-1 for load conditions.

TABLE 40-19: TIMER1 TIMING REQUIREMENTS(1)

AC CHARACTERISTICS		Standard Operating Conditions: 2.97V to 3.63V (unless otherwise stated) Operating temperature -40°C ≤ TA ≤ +105ºC						
Param. No.	**Symbol**	**Characteristics(2)**		**Min.**	**Typ.**	**Max.**	**Units**	**Conditions**
TA10	TTXH	TxCK high time	Synchronous, with prescaler	[(12.5 ns or 1 T_{PB1_CLK})/N] + 20 ns	—	—	ns	Must also meet parameter TA15(3)
			Asynchronous, with prescaler	10	—	—	ns	—
TA11	TTXL	TxCK low time	Synchronous, with prescaler	[(12.5 ns or 1 T_{PB1_CLK})/N] + 20 ns	—	—	ns	Must also meet parameter TA15(3)
			Asynchronous, with prescaler	10	—	—	ns	—
TA15	TTXP	TxCK input period	Synchronous, with prescaler	[(Greater of 20 ns or 2 T_{PB1_CLK})/N] + 30 ns	—	—	ns	VDD > 2.97V (3)
			Asynchronous, with prescaler	20	—	—	ns	VDD > 2.97V
OS60	FT1	SOSCI/T1CK oscillator input frequency range (oscillator enabled by setting TCS bit (T1CON<1>))		32.768	—	50	kHz	—
TA20	TCKEXTMRL	Delay from external TxCK clock edge to timer increment		—		1	T_{PB1_CLK}	—

Note 1: Timer1 is a Type A timer.

2: This parameter is characterized, but not tested in manufacturing.

3: N = Prescale Value (1, 8, 64, 256).

TABLE 40-20: TIMER2-TIMER7 TIMING REQUIREMENTS

AC CHARACTERISTICS				Standard Operating Conditions: 2.97V to 3.63V (unless otherwise stated) Operating temperature -40°C ≤ TA ≤ +105ºC				
Param. No.	**Symbol**	**Characteristics(1)**		**Min.**	**Max.**	**Units**	**Conditions**	
TB10	TtxH	TxCK high time	Synchronous, with prescaler	[(12.5 ns or 1 T_{PB1_CLK})/N] + 25 ns	—	ns	Must also meet parameter TB15	N = prescale value (1, 2, 4, 8, 16, 32, 64, 256)
TB11	TtxL	TxCK low time	Synchronous, with prescaler	[(12.5 ns or 1 T_{PB1_CLK})/N] + 25 ns	—	ns	Must also meet parameter TB15	
TB15	TtxP	TxCK input period	Synchronous, with prescaler	[(Greater of [(25 ns or $2T_{PB1_CLK}$)/N] + 30 ns	—	ns	VDD > 2.97V	
TB20	TCKEXTMRL	Delay from external TXCK clock edge to timer increment		—	1	T_{PB1_CLK}	—	

Note 1: These parameters are characterized, but not tested in manufacturing.

 © 2020 Microchip Technology Inc.

FIGURE 40-7: INPUT CAPTURE (CAPx) TIMING CHARACTERISTICS

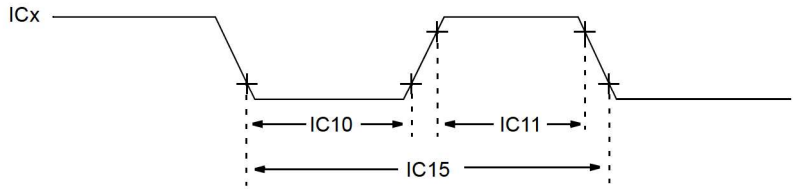

Note: Refer to Figure 40-1 for load conditions.

TABLE 40-21: INPUT CAPTURE MODULE TIMING REQUIREMENTS

AC CHARACTERISTICS			Standard Operating Conditions: 2.97V to 3.63V (unless otherwise stated) Operating temperature -40°C ≤ TA ≤ +105ºC				
Param. No.	**Symbol**	**Characteristics(1)**	**Min.**	**Max.**	**Units**	**Conditions**	
IC10	TccL	ICx input low time	[(12.5 ns or 1 T_{PB1_CLK}) /N] + 25 ns	—	ns	Must also meet parameter IC15.	N = prescale value (1, 4, 16)
IC11	TccH	ICx input high time	[(12.5 ns or 1 T_{PB1_CLK}) /N] + 25 ns	—	ns	Must also meet parameter IC15.	
IC15	TccP	ICx input period	[(25 ns or 2 T_{PB1_CLK}) /N] + 50 ns	—	ns	—	

Note 1: These parameters are characterized, but not tested in manufacturing.

FIGURE 40-8: OUTPUT COMPARE MODULE (OCx) TIMING CHARACTERISTICS

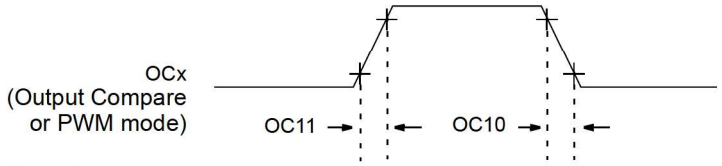

Note: Refer to Figure 40-1 for load conditions.

TABLE 40-22: OUTPUT COMPARE MODULE TIMING REQUIREMENTS

AC CHARACTERISTICS			Standard Operating Conditions: 2.97V to 3.63V (unless otherwise stated) Operating temperature -40°C ≤ TA ≤ +105ºC				
Param. No.	**Symbol**	**Characteristics(1)**	**Min.**	**Typ.(2)**	**Max.**	**Units**	**Conditions**
OC10	TccF	OCx output fall time	—	—	—	ns	See parameter DO32
OC11	TccR	OCx output rise time	—	—	—	ns	See parameter DO31

Note 1: These parameters are characterized, but not tested in manufacturing.

2: Data in the "Typ." column is at 3.3V, +25°C unless otherwise stated. Parameters are for design guidance only and are not tested.

FIGURE 40-9: SPIx MODULE MASTER MODE (CKE = 0) TIMING CHARACTERISTICS

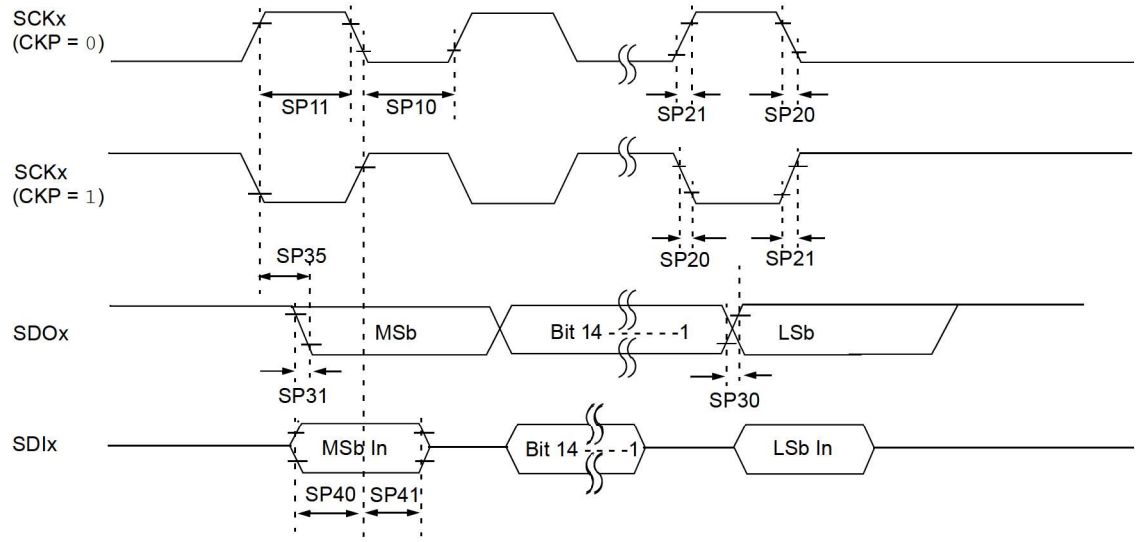

Note: Refer to Figure 40-1 for load conditions.

TABLE 40-23: SPIx MASTER MODE (CKE = 0) TIMING REQUIREMENTS

AC CHARACTERISTICS			Standard Operating Conditions: 2.97V to 3.63V (unless otherwise stated) Operating temperature -40°C ≤ TA ≤ +105ºC				
Param. No.	**Symbol**	**Characteristics(1)**	**Min.**	**Typ.(2)**	**Max.**	**Units**	**Conditions**
SP10	TscL	SCKx output low time(3)	Tsck/2	—	—	ns	—
SP11	TscH	SCKx output high time(3)	Tsck/2	—	—	ns	—
SP15	Tsck	SPI clock speed	—	—	40	MHz	SPI1 on RPC6
			—	—	20	MHz	SPI1 and SPI2 on other I/O
SP20	TscF	SCKx output fall time(4)	—	—	—	ns	See parameter DO32
SP21	TscR	SCKx output rise time(4)	—	—	—	ns	See parameter DO31
SP30	TdoF	SDOx data output fall time(4)	—	—	—	ns	See parameter DO32
SP31	TdoR	SDOx data output rise time(4)	—	—	—	ns	See parameter DO31
SP35	TscH2doV, TscL2doV	SDOx data output valid after SCKx edge	—	—	7	ns	VDD > 2.97V
SP40	TdiV2scH, TdiV2scL	Setup time of SDIx data input to SCKx edge	5	—	—	ns	—
SP41	TscH2diL, TscL2diL	Hold time of SDIx data input to SCKx edge	5	—	—	ns	—

Note 1: These parameters are characterized, but not tested in manufacturing.

2: Data in the "Typ." column is at 3.3V, +25°C unless otherwise stated.

3: The minimum clock period for SCKx is 25 ns. Therefore, the clock generated in Master mode must not violate this specification.

4: Assumes 10 pF load on all SPIx pins.

5: To achieve maximum data rate, VDD must be ≥ 3.3V, the SMP bit (SPIxCON<9>) must be equal to '1'.

 © 2020 Microchip Technology Inc.

FIGURE 40-10: SPIx MODULE MASTER MODE (CKE = 1) TIMING CHARACTERISTICS

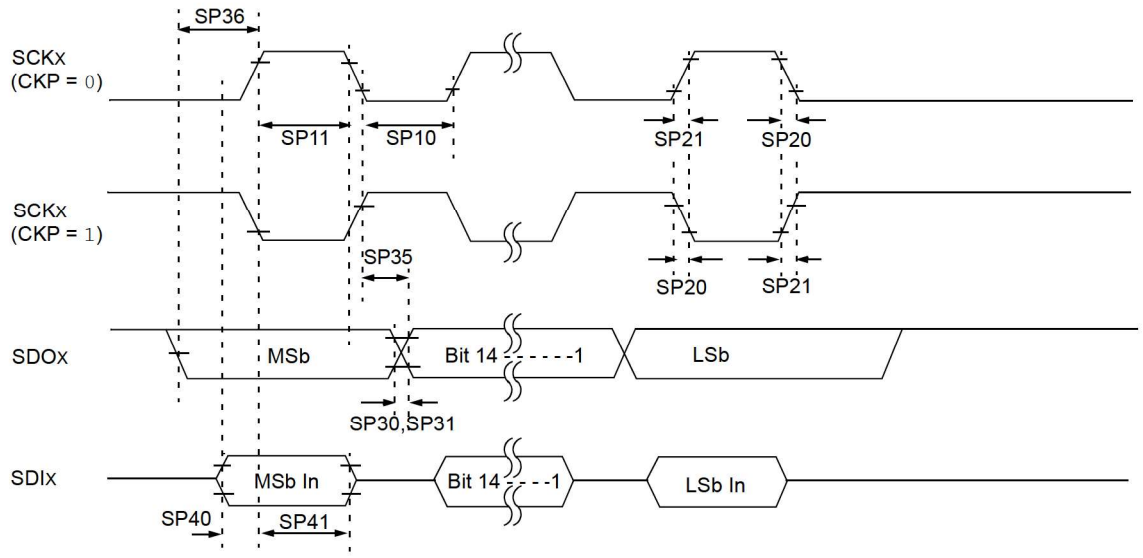

Note: Refer to Figure 40-1 for load conditions.

TABLE 40-24: SPIx MODULE MASTER MODE (CKE = 1) TIMING REQUIREMENTS

AC CHARACTERISTICS			Standard Operating Conditions: 2.97V to 3.63V (unless otherwise stated) Operating temperature -40°C ≤ TA ≤ +105ºC				
Param. No.	**Symbol**	**Characteristics(1)**	**Min.**	**Typ.(2)**	**Max.**	**Units**	**Conditions**
SP10	TscL	SCKx output low time(3)	Tsck/2	—	—	ns	—
SP11	TscH	SCKx output high time(3)	Tsck/2	—	—	ns	—
SP15	Tsck	SPI clock speed	—	—	40	MHz	SPI1 on RPC6
			—	—	20	MHz	SPI1 and SPI2 on other I/O
SP20	TscF	SCKx output fall time(4)	—	—	—	ns	See parameter DO32
SP21	TscR	SCKx output rise time(4)	—	—	—	ns	See parameter DO31
SP30	TdoF	SDOx data output fall time(4)	—	—	—	ns	See parameter DO32
SP31	TdoR	SDOx data output rise time(4)	—	—	—	ns	See parameter DO31
SP35	TscH2doV, TscL2doV	SDOx data output valid after SCKx edge	—	—	7	ns	VDD > 2.97V
SP36	TdoV2sc, TdoV2scL	SDOx data output setup to first SCKx edge	—	—	7	ns	—
SP40	TdiV2scH, TdiV2scL	Setup time of SDIx data input to SCKx edge	7	—	—	ns	VDD > 2.97V
SP41	TscH2diL, TscL2diL	Hold time of SDIx data input to SCKx edge	7	—	—	ns	VDD > 2.97V

TABLE 40-24: SPIx MODULE MASTER MODE (CKE = 1) TIMING REQUIREMENTS (CONTINUED)

AC CHARACTERISTICS			Standard Operating Conditions: 2.97V to 3.63V (unless otherwise stated) Operating temperature -40°C ≤ TA ≤ +105ºC				
Param. No.	Symbol	Characteristics(1)	Min.	Typ.(2)	Max.	Units	Conditions

Note 1: These parameters are characterized, but not tested in manufacturing.

2: Data in the "Typ." column is at 3.3V, +25°C unless otherwise stated.

3: The minimum clock period for SCKx is 25 ns. Therefore, the clock generated in Master mode must not violate this specification.

4: Assumes 10 pF load on all SPIx pins.

5: To achieve the maximum data rate, VDD must be ≥ 3.3V and the SMP bit (SPIxCON<9>) must be equal to '1'.

FIGURE 40-11: SPIx MODULE SLAVE MODE (CKE = 0) TIMING CHARACTERISTICS

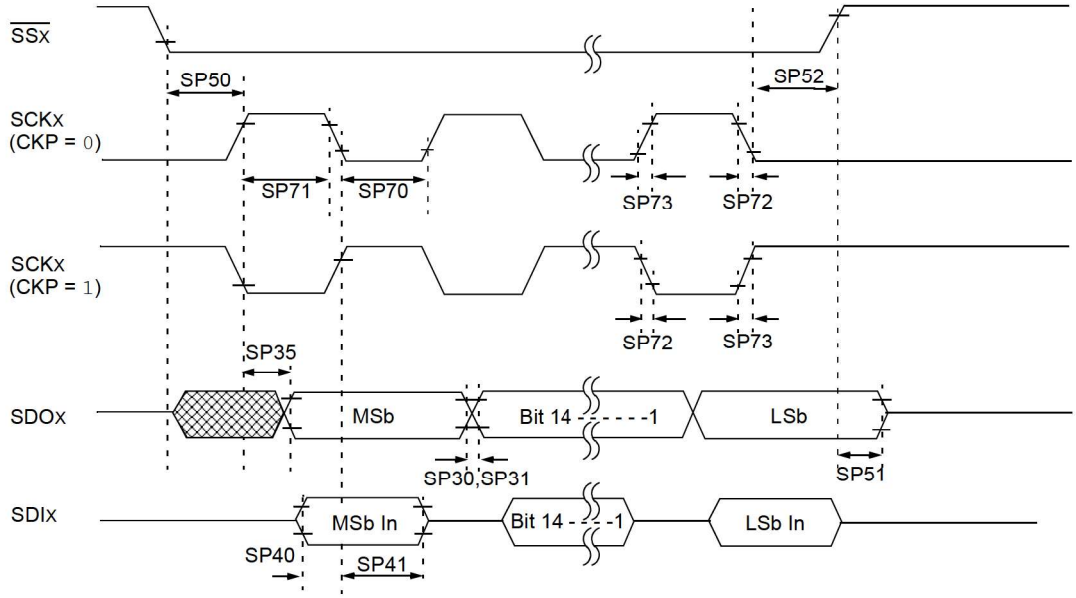

Note: Refer to Figure 40-1 for load conditions.

TABLE 40-25: SPIx MODULE SLAVE MODE (CKE = 0) TIMING REQUIREMENTS

AC CHARACTERISTICS			Standard Operating Conditions: 2.97V to 3.63V (unless otherwise stated) Operating temperature -40°C ≤ TA ≤ +105ºC				
Param. No.	Symbol	Characteristics(1)	Min.	Typ.(2)	Max.	Units	Conditions
SP15	Tsck	SPI clock speed	—	—	40	MHz	SPI1 on RPC6
			—	—	20	MHz	SPI1 and SPI2 on other I/O
SP70	TscL	SCKx input low time(3)	Tsck/2	—	—	ns	—
SP71	TscH	SCKx input high time(3)	Tsck/2	—	—	ns	—
SP72	TscF	SCKx input fall time	—	—	—	ns	See parameter DO32
SP73	TscR	SCKx input rise time	—	—	—	ns	See parameter DO31

 © 2020 Microchip Technology Inc.

TABLE 40-25: SPIx MODULE SLAVE MODE (CKE = 0) TIMING REQUIREMENTS (CONTINUED)

AC CHARACTERISTICS			Standard Operating Conditions: 2.97V to 3.63V (unless otherwise stated) Operating temperature -40°C ≤ TA ≤ +105ºC				
Param. No.	**Symbol**	**Characteristics(1)**	**Min.**	**Typ.(2)**	**Max.**	**Units**	**Conditions**
SP30	TdoF	SDOx data output fall time(4)	—	—	—	ns	See parameter DO32
SP31	TdoR	SDOx data output rise time(4)	—	—	—	ns	See parameter DO31
SP35	TscH2doV, TscL2doV	SDOx data output valid after SCKx edge	—	—	7	ns	VDD > 2.97V
SP40	TdiV2scH, TdiV2scL	Setup time of SDIx data input to SCKx edge	5	—	—	ns	—
SP41	TscH2diL, TscL2diL	Hold time of SDIx data input to SCKx edge	5	—	—	ns	—
SP50	TssL2scH, TssL2scL	$\overline{SSx}$ ↓ to SCKx ↑ or SCKx input	55	—	—	ns	—
SP51	TssH2doZ	$\overline{SSx}$ ↑ to SDOx output high-impedance (3)	2.5	—	12	ns	—
SP52	TscH2ssH TscL2ssH	$\overline{SSx}$ after SCKx edge	—	75	—	ns	—

Note 1: These parameters are characterized, but not tested in manufacturing.
2: Data in the "Typ." column is at 3.3V, +25°C unless otherwise stated.
3: The minimum clock period for SCKx is 25 ns.
4: Assumes 10 pF load on all SPIx pins.

FIGURE 40-12: SPIx MODULE SLAVE MODE (CKE = 1) TIMING CHARACTERISTICS

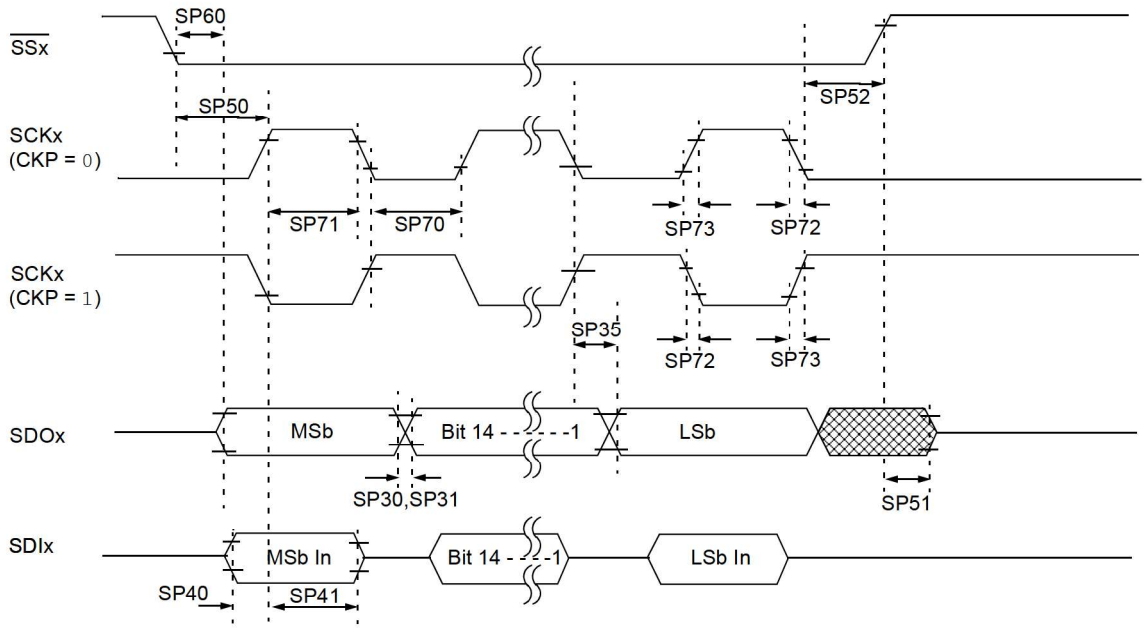

Note: Refer to Figure 40-1 for load conditions.

TABLE 40-26: SPIx MODULE SLAVE MODE (CKE = 1) TIMING REQUIREMENTS

AC CHARACTERISTICS			Standard Operating Conditions: 2.97V to 3.63V (unless otherwise stated) Operating temperature -40°C ≤ TA ≤ +105ºC				
Param. No.	**Symbol**	**Characteristics(1)**	**Min.**	**Typ.(2)**	**Max.**	**Units**	**Conditions**
SP15	Tsck	SPI clock speed	—	—	40	MHz	SPI1 on RPC6
			—	—	20	MHz	SPI1 and SPI2 on other I/O
SP70	TscL	SCKx input low time(3)	TSCK/2	—	—	ns	—
SP71	TscH	SCKx input high time(3)	TSCK/2	—	—	ns	—
SP72	TscF	SCKx input fall time	—	—	10	ns	—
SP73	TscR	SCKx input rise time	—	—	10	ns	—
SP30	TdoF	SDOx data output fall time(4)	—	—	—	ns	See parameter DO32
SP31	TdoR	SDOx data output rise time(4)	—	—	—	ns	See parameter DO31
SP35	TscH2doV, TscL2doV	SDOx data output valid after SCKx edge	—	—	10	ns	VDD > 2.97V
SP40	TdiV2scH, TdiV2scL	Setup time of SDIx data input to SCKx edge	0	—	—	ns	—
SP41	TscH2diL, TscL2diL	Hold time of SDIx data input to SCKx edge	7	—	—	ns	—
SP50	TssL2scH, TssL2scL	$\overline{SSx}$ ↓ to SCKx ↓ or SCKx ↑ input	55	—	—	ns	—
SP51	TssH2doZ	$\overline{SSx}$ ↑ to SDOx output high-impedance(4)	2.5	—	12	ns	—
SP52	TscH2ssH TscL2ssH	$\overline{SSx}$ ↑ after SCKx Edge	10	—	—	ns	—
SP60	TssL2doV	$\overline{SDO}$x Data Output Valid after $\overline{SSx}$ Edge	—	—	12.5	ns	—

Note 1: These parameters are characterized, but not tested in manufacturing.

2: Data in the "Typ." column is at 3.3V, +25°C unless otherwise stated.

3: The minimum clock period for SCKx is 25 ns.

4: Assumes 10 pF load on all SPIx pins.

 © 2020 Microchip Technology Inc.

FIGURE 40-13: SQI SERIAL INPUT TIMING CHARACTERISTICS

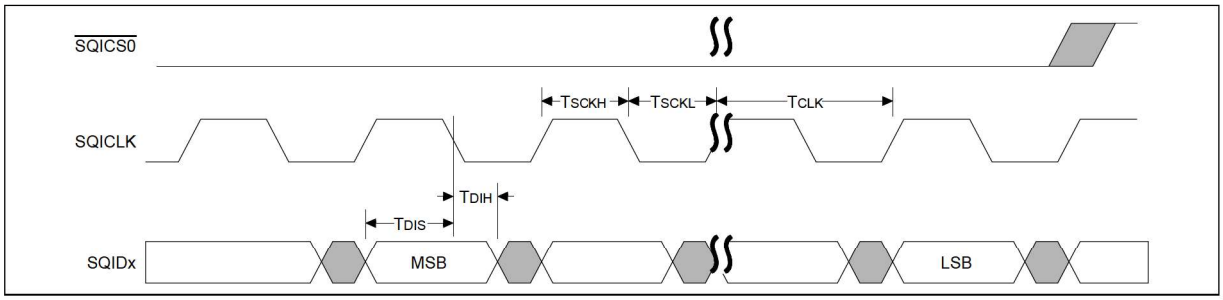

FIGURE 40-14: SQI SERIAL OUTPUT TIMING CHARACTERISTICS

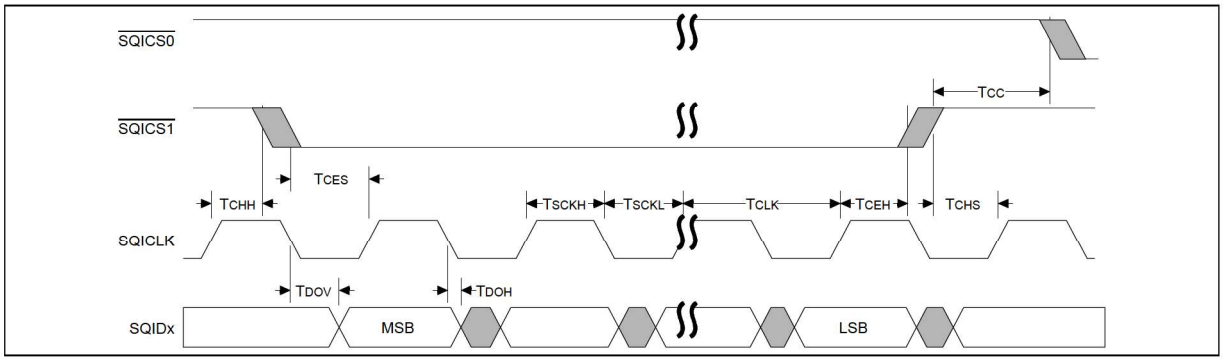

TABLE 40-27: SQI TIMING REQUIREMENTS

AC CHARACTERISTICS			Standard Operating Conditions: 2.97V to 3.63V (unless otherwise stated) Operating temperature -40°C ≤ TA ≤ +105ºC				
Param. No.	**Symbol**	**Characteristic(1,3)**	**Min.**	**Typ.(2)**	**Max.**	**Units**	**Conditions**
SQ10	FCLK	Serial clock frequency (1/TSQI)	—	—	80	MHz	Serial Flash mode
			—	—	25	MHz	SPI mode 0 and 3
SQ11	TSCKH	Serial clock high time	5.5	—	—	ns	—
SQ12	TSCKL	Serial clock low time	5.5	—	—	ns	—
SQ13	TSCKR	Serial clock rise time	—	—	—	ns	See parameter DO31
SQ14	TSCKF	Serial clock fall time	—	—	—	ns	See parameter DO32
SQ15	TCSS (TCES)	$\overline{CS}$ active setup time	5	—	—	ns	—
SQ16	TCSH (TCEH)	$\overline{CS}$ active hold time	5	—	—	ns	—
SQ17	TCHS	$\overline{CS}$ not active setup time	3	—	—	ns	—
SQ18	TCHH	$\overline{CS}$ not active hold time	3	—	—	ns	—
SQ22	TDIS	Data in setup time	6	—	—	ns	—
SQ23	TDIH	Data in hold time	3	—	—	ns	—
SQ24	TDOH	Data out hold	0	—	—	ns	—
SQ25	TDOV	Data out valid	—	—	6	ns	—

Note 1: These parameters are characterized, but not tested in manufacturing.

2: Data in the "Typ." column is at 3.3V, +25°C unless otherwise stated.

3: Assumes 10 pF load on all SQIx pins

FIGURE 40-15: I2Cx BUS START/STOP BITS TIMING CHARACTERISTICS (MASTER MODE)

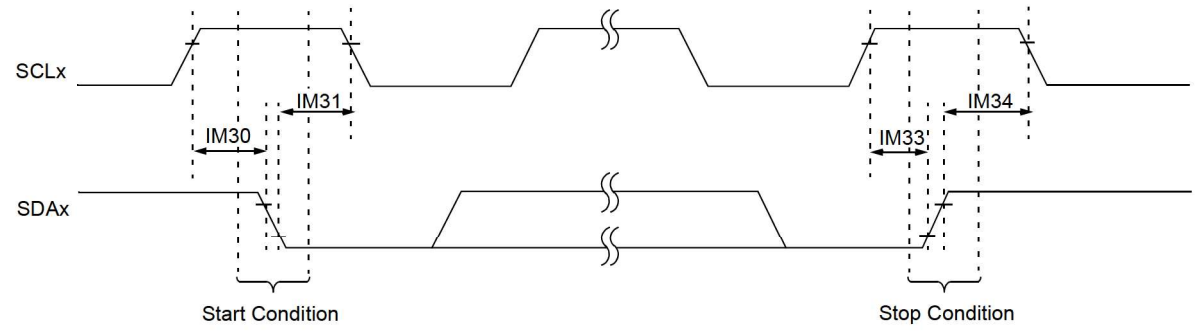

Note: Refer to Figure 40-1 for load conditions.

FIGURE 40-16: I2Cx BUS DATA TIMING CHARACTERISTICS (MASTER MODE)

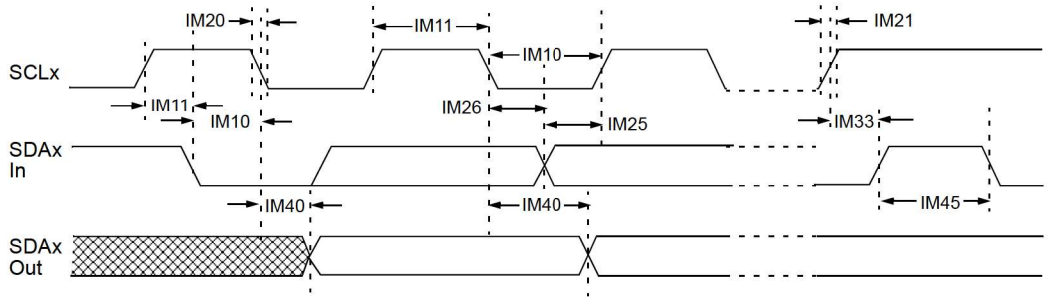

Note: Refer to Figure 40-1 for load conditions.

TABLE 40-28: I2Cx BUS DATA TIMING REQUIREMENTS (MASTER MODE)

AC CHARACTERISTICS				**Standard Operating Conditions: 2.97V to 3.63V (unless otherwise stated)** Operating temperature -40°C ≤ TA ≤ +105ºC			
Param. No.	**Symbol**	**Characteristics**		**Min.(1)**	**Max.**	**Units**	**Conditions**
IM10	TLO:SCL	Clock low time	100 kHz mode	TPBCLK * (BRG + 2)	—	µs	—
			400 kHz mode	TPBCLK * (BRG + 2)	—	µs	—
			1 MHz mode(2)	TPBCLK * (BRG + 2)	—	µs	—
IM11	THI:SCL	Clock high time	100 kHz mode	TPBCLK * (BRG + 2)	—	µs	—
			400 kHz mode	TPBCLK * (BRG + 2)	—	µs	—
			1 MHz mode(2)	TPBCLK * (BRG + 2)	—	µs	—
IM20	TF:SCL	SDAx and SCLx fall time	100 kHz mode	—	300	ns	CB is specified to be from 10 to 400 pF
			400 kHz mode	20 + 0.1 CB	300	ns	
			1 MHz mode(2)	—	170	ns	
IM21	TR:SCL	SDAx and SCLx rise time	100 kHz mode	—	1000	ns	CB is specified to be from 10 to 400 pF
			400 kHz mode	20 + 0.1 CB	300	ns	
			1 MHz mode(2)	—	300	ns	
IM25	TSU:DAT	Data input setup time	100 kHz mode	250	—	ns	—
			400 kHz mode	100	—	ns	
			1 MHz mode (2)	100	—	ns	

 © 2020 Microchip Technology Inc.

TABLE 40-28: I2Cx BUS DATA TIMING REQUIREMENTS (MASTER MODE) (CONTINUED)

AC CHARACTERISTICS				Standard Operating Conditions: 2.97V to 3.63V (unless otherwise stated) Operating temperature -40°C ≤ TA ≤ +105ºC			
Param. No.	**Symbol**	**Characteristics**		**Min.(1)**	**Max.**	**Units**	**Conditions**
IM26	THD:DAT	Data input hold time	100 kHz mode	0	—	µs	—
			400 kHz mode	0	0.9	µs	
			1 MHz mode (2)	0	0.4	µs	
IM30	TSU:STA	Start condition setup time	100 kHz mode	TPBCLK * (BRG + 2)	—	µs	Only relevant for Repeated Start condition
			400 kHz mode	TPBCLK * (BRG + 2)	—	µs	
			1 MHz mode (2)	TPBCLK * (BRG + 2)	—	µs	
IM31	THD:STA	Start condition hold time	100 kHz mode	TPBCLK * (BRG + 2)	—	µs	After this period, the first clock pulse is generated
			400 kHz mode	TPBCLK * (BRG + 2)	—	µs	
			1 MHz mode (2)	TPBCLK * (BRG + 2)	—	µs	
IM33	TSU:STO	Stop condition setup time	100 kHz mode	TPBCLK * (BRG + 2)	—	µs	—
			400 kHz mode	TPBCLK * (BRG + 2)	—	µs	
			1 MHz mode (2)	TPBCLK * (BRG + 2)	—	µs	
IM34	THD:STO	Stop condition hold time	100 kHz mode	TPBCLK * (BRG + 2)	—	ns	—
			400 kHz mode	TPBCLK * (BRG + 2)	—	ns	
			1 MHz mode (2)	TPBCLK * (BRG + 2)	—	ns	
IM40	TAA:SCL	Output valid from clock	100 kHz mode	—	3500	ns	—
			400 kHz mode	—	1000	ns	—
			1 MHz mode (2)	—	350	ns	—
IM45	TBF:SDA	Bus free time	100 kHz mode	4.7	—	µs	The amount of time the bus must be free before a new transmission can start
			400 kHz mode	1.3	—	µs	
			1 MHz mode (2)	0.5	—	µs	
IM50	CB	Bus capacitive loading		—	400	pF	See parameter DO58

Note 1: BRG is the value of the I^2C Baud Rate Generator.

2: Maximum pin capacitance = 10 pF for all I2Cx pins (for 1 MHz mode only).

FIGURE 40-17: I2Cx BUS START/STOP BITS TIMING CHARACTERISTICS (SLAVE MODE)

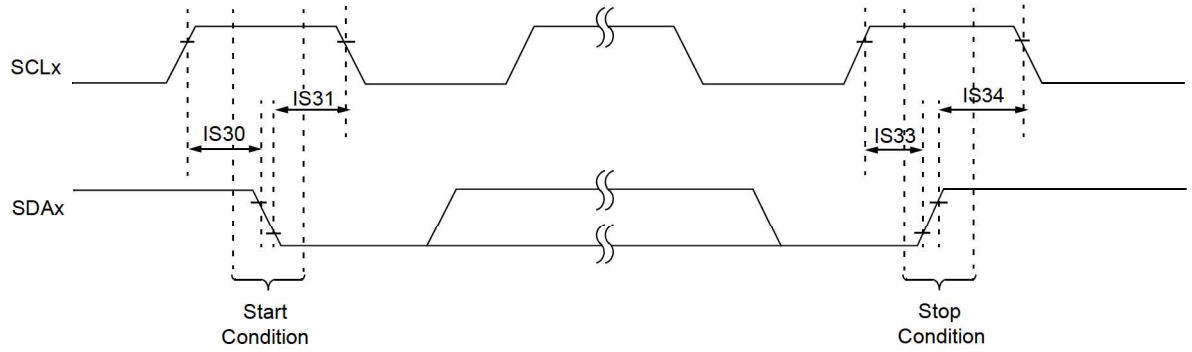

Note: Refer to Figure 40-1 for load conditions.

FIGURE 40-18: I2Cx BUS DATA TIMING CHARACTERISTICS (SLAVE MODE)

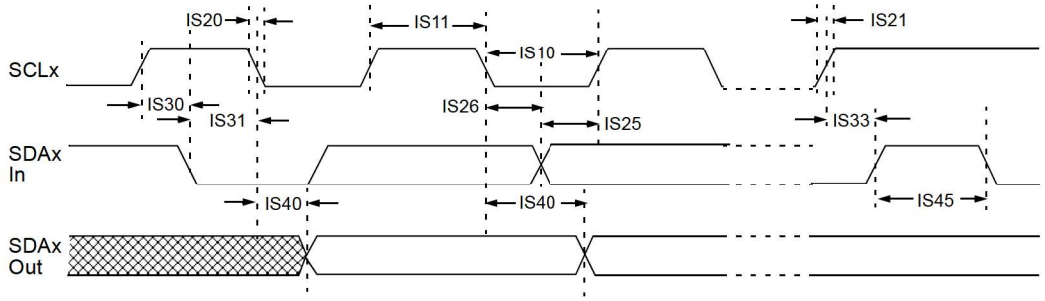

Note: Refer to Figure 40-1 for load conditions.

TABLE 40-29: I2Cx BUS DATA TIMING REQUIREMENTS (SLAVE MODE)

AC CHARACTERISTICS				Standard Operating Conditions: 2.97V to 3.63V (unless otherwise stated) Operating temperature -40°C ≤ TA ≤ +105°C			
Param. No.	**Symbol**	**Characteristics**		**Min.**	**Max.**	**Units**	**Conditions**
IS10	TLO:SCL	Clock low time	100 kHz mode	4.7	—	µs	PBCLK must operate at a minimum of 800 kHz
			400 kHz mode	1.3	—	µs	PBCLK must operate at a minimum of 3.2 MHz
			1 MHz mode (1)	0.5	—	µs	—
IS11	THI:SCL	Clock high time	100 kHz mode	4.0	—	µs	PBCLK must operate at a minimum of 800 kHz
			400 kHz mode	0.6	—	µs	PBCLK must operate at a minimum of 3.2 MHz
			1 MHz mode (1)	0.5	—	µs	—
IS20	TF:SCL	SDAx and SCLx fall time	100 kHz mode	—	300	ns	CB is specified to be from 10 to 400 pF
			400 kHz mode	20 + 0.1 CB	300	ns	
			1 MHz mode(1)	—	100	ns	

 © 2020 Microchip Technology Inc.

TABLE 40-29: I2Cx BUS DATA TIMING REQUIREMENTS (SLAVE MODE) (CONTINUED)

AC CHARACTERISTICS				Standard Operating Conditions: 2.97V to 3.63V (unless otherwise stated) Operating temperature -40°C ≤ TA ≤ +105ºC			
Param. No.	**Symbol**	**Characteristics**		**Min.**	**Max.**	**Units**	**Conditions**
IS21	TR:SCL	SDAx and SCLx rise time	100 kHz mode	—	1000	ns	CB is specified to be from 10 to 400 pF
			400 kHz mode	20 + 0.1 CB	300	ns	
			1 MHz mode(1)	—	300	ns	
IS25	TSU:DAT	Data input setup time	100 kHz mode	250	—	ns	—
			400 kHz mode	100	—	ns	
			1 MHz mode(1)	100	—	ns	
IS26	THD:DAT	Data input hold time	100 kHz mode	0	—	ns	—
			400 kHz mode	0	0.9	µs	
			1 MHz mode(1)	0	0.3	µs	
IS30	TSU:STA	Start condition setup time	100 kHz mode	4700	—	ns	Only relevant for Repeated Start condition
			400 kHz mode	600	—	ns	
			1 MHz mode(1)	250	—	ns	
IS31	THD:STA	Start condition hold time	100 kHz mode	4000	—	ns	After this period, the first clock pulse is generated
			400 kHz mode	600	—	ns	
			1 MHz mode(1)	250	—	ns	
IS33	TSU:STO	Stop condition setup time	100 kHz mode	4000	—	ns	—
			400 kHz mode	600	—	ns	
			1 MHz mode(1)	600	—	ns	
IS34	THD:STO	Stop condition hold time	100 kHz mode	4000	—	ns	—
			400 kHz mode	600	—	ns	
			1 MHz mode(1)	250		ns	
IS40	TAA:SCL	Output valid from clock	100 kHz mode	0	3500	ns	—
			400 kHz mode	0	1000	ns	
			1 MHz mode(1)	0	350	ns	
IS45	TBF:SDA	Bus free time	100 kHz mode	4.7	—	µs	The amount of time the bus must be free before a new transmission can start
			400 kHz mode	1.3	—	µs	
			1 MHz mode(1)	0.5	—	µs	
IS50	CB	Bus Capacitive Loading		—	400	pF	—

Note 1: Maximum pin capacitance = 10 pF for all I2Cx pins (for 1 MHz mode only).

FIGURE 40-19: CANx MODULE I/O TIMING CHARACTERISTICS

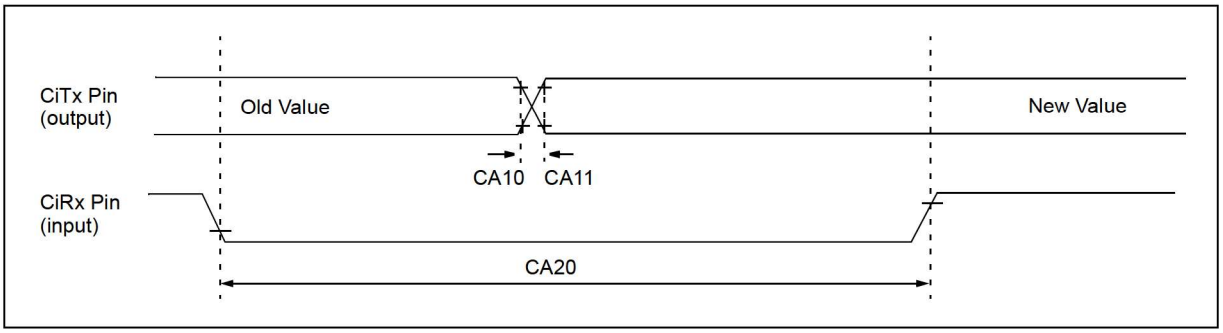

TABLE 40-30: CANx MODULE I/O TIMING REQUIREMENTS

AC CHARACTERISTICS			Standard Operating Conditions: 2.97V to 3.63V (unless otherwise stated) Operating temperature -40°C ≤ TA ≤ +105ºC				
Param No.	**Symbol**	**Characteristic(1)**	**Min**	**Typ(2)**	**Max**	**Units**	**Conditions**
CA10	TioF	Port output fall time	—	—	—	ns	See parameter DO32
CA11	TioR	Port output rise time	—	—	—	ns	See parameter DO31
CA20	TCWF	Pulse width to trigger CAN wake-up filter (CAN only)	700	—	—	ns	—
CA20	TCWF	Pulse width to trigger CAN wake-up filter (CAN-FD Only)	700	—	—	ns	—

Note 1: These parameters are characterized but not tested in manufacturing.

2: Data in the "Typ" column is at 3.3V, +25°C unless otherwise stated.

 © 2020 Microchip Technology Inc.

TABLE 40-31: ADC MODULE SPECIFICATIONS(4)

AC CHARACTERISTICS			Standard Operating Conditions: 2.97V to 3.63V (unless otherwise stated) Operating temperature -40°C ≤ TA ≤ +105ºC				
Param. No.	**Symbol**	**Characteristics**	**Min.**	**Typ.**	**Max.**	**Units**	**Conditions**
Device Supply							
AD01	AVDD	Module VDD supply	VDD – 0.3	—	VDD + 0.3	V	—
AD02	AVSS	Module VSS supply	VSS	—	VSS + 0.3	V	—
Reference Inputs							
AD05	VREFH	Reference voltage high	—	—	AVDD	V	(1)
AD06	VREFL	Reference voltage low	AVSS	—	—	V	(1)
AD07	VREF	Absolute reference voltage (VREFH – VREFL)	AVDD – 0.3	—	AVDD + 0.3	V	(2)
AD08	IREF	Current drain	—	102	—	µA	Per ADCx ('x' = 0-4, 7)
Analog Input							
AD12	VINH-VINL	Full-Scale input span	VREFL	—	VREFH	V	—
AD13	VINL	Absolute VINL input voltage	AVSS	—	VREFL	V	—
AD14	VINH	Absolute VINH input voltage	AVSS	—	VREFH	V	—
ADC Accuracy							
AD20c	NR	Resolution	6	—	12	bits	Selectable 6, 8, 10, 12 resolution ranges
AD21c	INL	Integral nonlinearity	—	±3	—	LSb	VINL = AVSS = VREFL = 0V, AVDD = VREFH = 3.3V
AD22c	DNL	Differential nonlinearity	—	±1	—	LSb	VINL = AVSS = VREFL = 0V, AVDD = VREFH = 3.3V
AD23c	GERR	Gain error	—	±8	—	LSb	VINL = AVSS = VREFL = 0V, AVDD = VREFH = 3.3V
AD24c	EOFF	Offset error	—	±4	—	LSb	VINL = AVSS = 0V, AVDD = 3.3V
Dynamic Performance							
AD31b	SINAD	Signal to noise and distortion	—	67	—	dB	Single-ended(2)(3)
AD34b	ENOB	Effective number of bits	—	10.5	—	bits	(2)(3)

Note 1: These parameters are not characterized or tested in manufacturing.

2: These parameters are characterized, but not tested in manufacturing.

3: Characterized with a 1 kHz sine wave.

4: The ADC module is functional at VBORMIN < VDD < VDDMIN, but with degraded performance. Unless otherwise stated, module functionality is guaranteed, but not characterized.

TABLE 40-32: ANALOG-TO-DIGITAL CONVERSION TIMING REQUIREMENTS

AC CHARACTERISTICS(2)			Standard Operating Conditions: 2.97V to 3.63V (unless otherwise stated) Operating temperature-40°C ≤ TA ≤ +105ºC				
Symbol	**Characteristics**		**Min.**	**Typ.(1)**	**Max.**	**Units**	**Conditions**
t_{sys}	ADC controller clock period		8	10	7142	ns	—
t_{ADC}	SAR ADC core clock period		28.57	35.7	7142	ns	—
DutyCyc	Duty cycle		45	50	55	%	—
f_{CNV}	Sampling rate	selres = 11, rest = 12	0.01	2	2.5	MSPS	—
		selres = 10, rest = 10	0.01	2.33	3.5	MSPS	—
		selres = 01, rest = 8	0.01	2.8	4.375	MSPS	—
		selres = 00, rest = 6	0.01	3.5	5.833	MSPS	—
N_{CNV}	Conversion cycle	selres = 11, rest = 12	14			Cyc	—
		selres = 10, rest = 10	12			Cyc	—
		selres = 01, rest = 8	10			Cyc	—
		selres = 00, rest = 6	8			Cyc	—
$D_{LATENCY}$	Data latency	selres = 11, rest = 12	14			Cyc	—
		selres = 10, rest = 10	12			Cyc	—
		selres = 01, rest = 8	10			Cyc	—
		selres = 00, rest = 6	8			Cyc	—
T_{SEP}	Separation time between command		0			ns	—
T_{SAMP}	Sample time		$2.5*t_{ADC}$	—	infinite	—	—
T_{CSS}	Conversion complete to sample start		—	0	—	ns	—
T_{WARMUP}	Wake-up time for analog		—	—	20	ns	—
T_{SAMP_DEL}	Trigger Pos Edge to End-Of-Sample Delay	en_async_samp = 1	1	2	3	ns	—
		en_async_samp = 1	—	(4+/-0.5) * t_{sys}	—	ns	—

Note 1: These parameters are characterized, but not tested in manufacturing.

2: The ADC module is functional at VBORMIN < VDD < VDDMIN, but with degraded performance. Unless otherwise stated, module functionality is guaranteed, but not characterized.

 © 2020 Microchip Technology Inc.

FIGURE 40-1: PROGRAMMABLE LOW-VOLTAGE DETECT ELECTRICAL CHARACTERISTICS

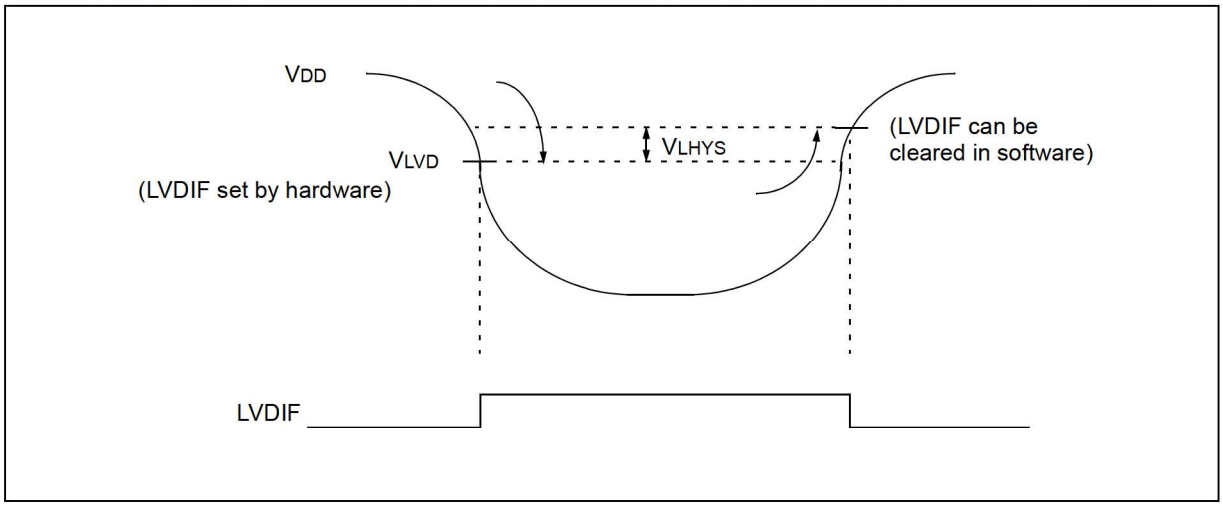

TABLE 40-33: PLVD ELECTRICAL CHARACTERISTICS

DC Specifications			**Standard Operating Conditions: 2.97V to 3.63V (unless otherwise stated)** Operating temperature -40°C ≤ TA ≤ +105°C				
Symbol	**Characteristic**		**Min.**	**Typ.**	**Max.**	**Units**	**Conditions**
Vlvd	LVD voltage on VDD transition high to low	LVDL = 0100	3.4	3.526	3.62	V	
		LVDL = 0101	3.3	3.329	3.368	V	
		LVDL = 0110	3.216	3.278	3.322	V	
		LVDL = 0111	2.932	2.991	3.034	V	

Note 1: Production tested at T_A = 25°C. These parameters are characterized, but not tested in manufacturing.

2: LVDL = 1000 to LVDL=1011 are not supported.

TABLE 40-34: TEMPERATURE SENSOR SPECIFICATIONS

AC CHARACTERISTICS			Standard Operating Conditions[1]: 2.97V to 3.63V (unless otherwise stated) Operating temperature -40°C ≤ TA ≤ +105ºC				
Param. No.	**Symbol**	**Characteristics**	**Min.**	**Typ.**	**Max.**	**Units**	**Conditions**
TS10	VTS	Rate of change	—	+5	—	mV/ºC	—
TS11	TR	Resolution	-2	—	+2	ºC	—
TS12	IVTEMP	Voltage range	0.5	—	1.5	V	—
TS13	TMIN	Minimum temperature	—	-40	—	ºC	IVTEMP = 0.5V
TS14	TMAX	Maximum temperature	—	125	—	ºC	IVTEMP = 1.3V

Note 1: The temperature sensor is functional at VBORMIN < VDD < VDDMIN, but with degraded performance. Unless otherwise stated, module functionality is tested, but not characterized.

TABLE 40-35: USB OTG ELECTRICAL SPECIFICATIONS

AC CHARACTERISTICS			Standard Operating Conditions: 2.97V to 3.63V (unless otherwise stated) Operating temperature -40°C ≤ TA ≤ +105ºC				
Param. No.	**Symbol**	**Characteristics[1]**	**Min.**	**Typ.**	**Max.**	**Units**	**Conditions**
USB313	VUSB3V3	USB voltage	3.0	—	3.6	V	Voltage on VUSB3V3 must be in this range for proper USB operation
Low-Speed and Full-Speed Modes							
USB315	VILUSB	Input low voltage for USB buffer	—	—	0.8	V	—
USB316	VIHUSB	Input high voltage for USB buffer	2.0	—	—	V	—
USB318	VDIFS	Differential input sensitivity	—	—	0.2	V	The difference between D+ and D- must exceed this value while VCM is met
USB319	VCM	Differential common mode range	0.8	—	2.5	V	—
USB321	VOL	Voltage output low	0.0	—	0.3	V	1.425 kΩ load connected to VUSB3V3
USB322	VOH	Voltage output high	2.8	—	3.6	V	14.25 kΩ load connected to ground

Note 1: These parameters are characterized, but not tested in manufacturing.

 © 2020 Microchip Technology Inc.

TABLE 40-36: ETHERNET MODULE SPECIFICATIONS

AC CHARACTERISTICS		Standard Operating Conditions: 2.97V to 3.63V (unless otherwise stated) Operating temperature -40°C ≤ TA ≤ +105ºC				
Param. No.	**Characteristic**	**Min.**	**Typ.**	**Max.**	**Units**	**Conditions**
RMII Timing Requirements						
ET11	Reference clock frequency	—	50	—	MHz	—
ET12	Reference clock duty cycle	35	—	65	%	—
ET13	ETXDx, ETEN, Setup and Hold time	5	—	12	ns	—
ET14	ERXDx, ERXDV, ERXERR Setup and Hold time	5	—	12	ns	—

FIGURE 40-20: ETHERNET AC TIMING DIAGRAM

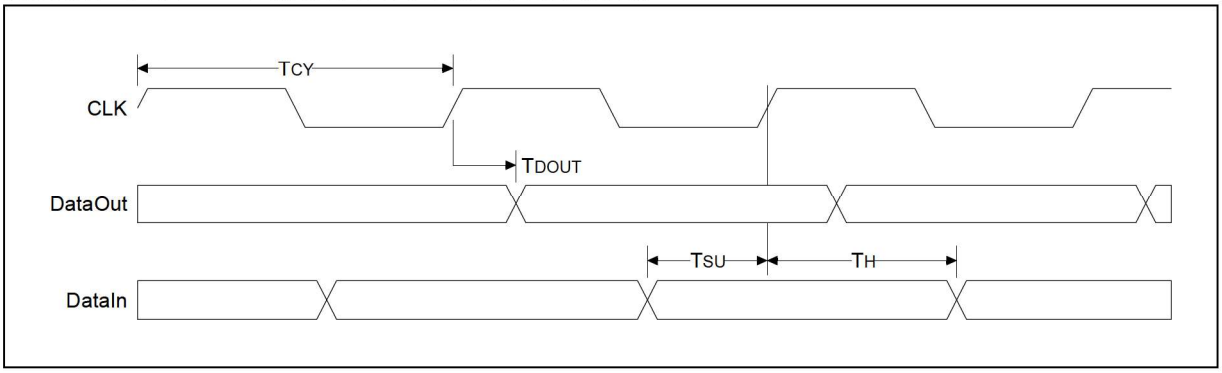

FIGURE 40-21: EJTAG/JTAG TIMING CHARACTERISTICS

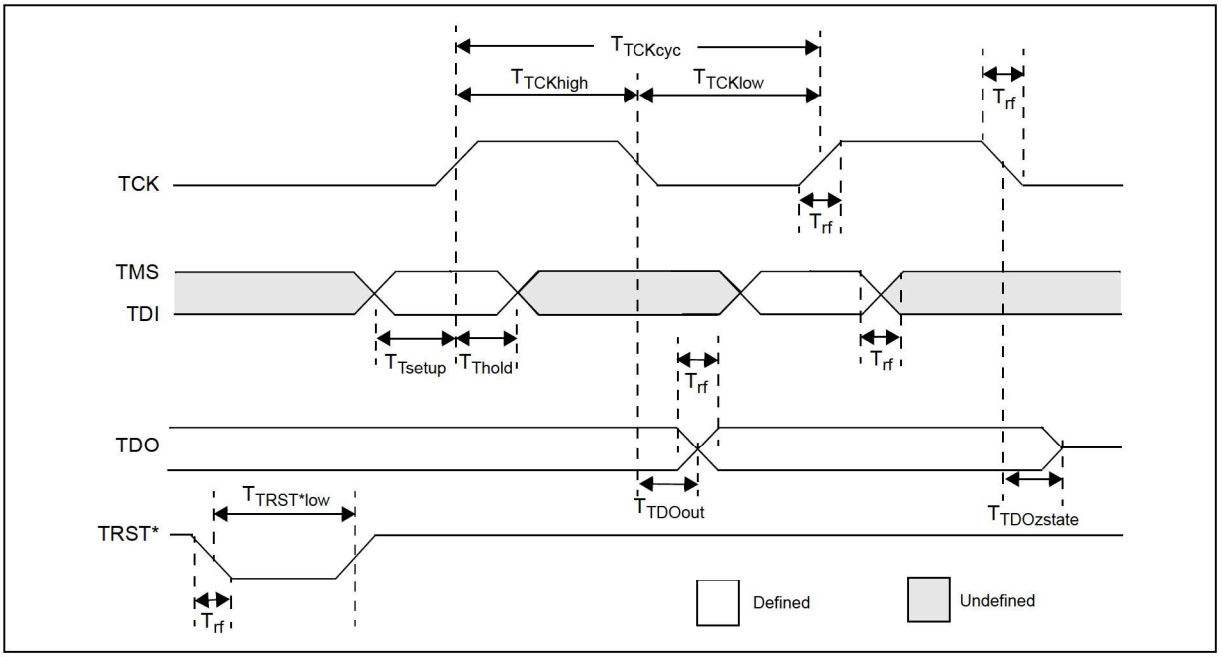

TABLE 40-37: EJTAG/JTAG TIMING REQUIREMENTS

AC CHARACTERISTICS			Standard Operating Conditions: 2.97V to 3.63V (unless otherwise stated) Operating temperature -40°C ≤ TA ≤ +105ºC			
Param. No.	**Symbol**	**Description(1)**	**Min.**	**Max.**	**Units**	**Conditions**
EJ1	TTCKCYC	TCK cycle time	25	—	ns	—
EJ2	TTCKHIGH	TCK high time	10	—	ns	—
EJ3	TTCKLOW	TCK low time	10	—	ns	—
EJ4	TTSETUP	TAP signals setup time before rising TCK	5	—	ns	—
EJ5	TTHOLD	TAP signals hold time after rising TCK	3	—	ns	—
EJ6	TTDOOUT	TDO output delay time from falling TCK	—	5	ns	—
EJ7	TTDOZSTATE	TDO 3-state delay time from falling TCK	—	5	ns	—
EJ8	TTRSTLOW	TRST low time	25	—	ns	—
EJ9	TRF	TAP signals rise/fall time, all input and output	—	—	ns	—

Note 1: These parameters are characterized, but not tested in manufacturing.

 © 2020 Microchip Technology Inc.

40.1.3 AC AND DC CHARACTERISTICS GRAPHS

Note:	The graphs provided are a statistical summary based on a limited number of samples and are provided for design guidance purposes only. The performance characteristics listed herein are not tested or guaranteed. In some graphs, the data presented may be outside the specified operating range (for example, outside specified power supply range) and therefore, outside the warranted range.

FIGURE 40-22: VOH – 4x DRIVER PINS

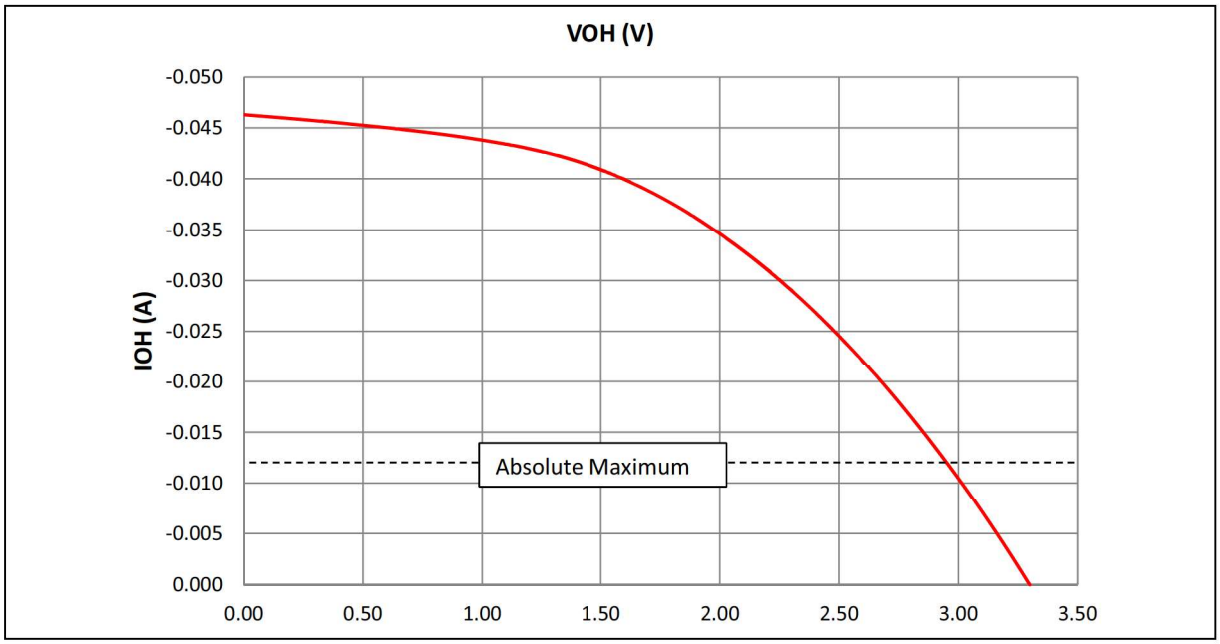

FIGURE 40-23: VOL – 4x DRIVER PINS

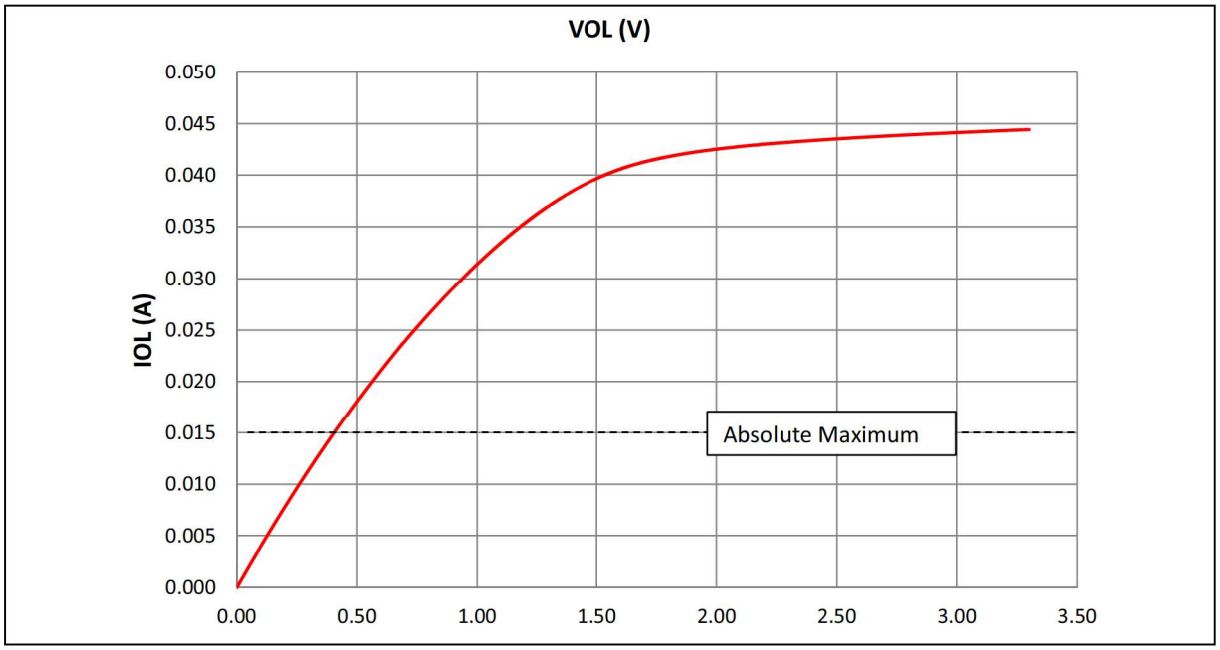

FIGURE 40-24: VOH – 8x DRIVER PINS

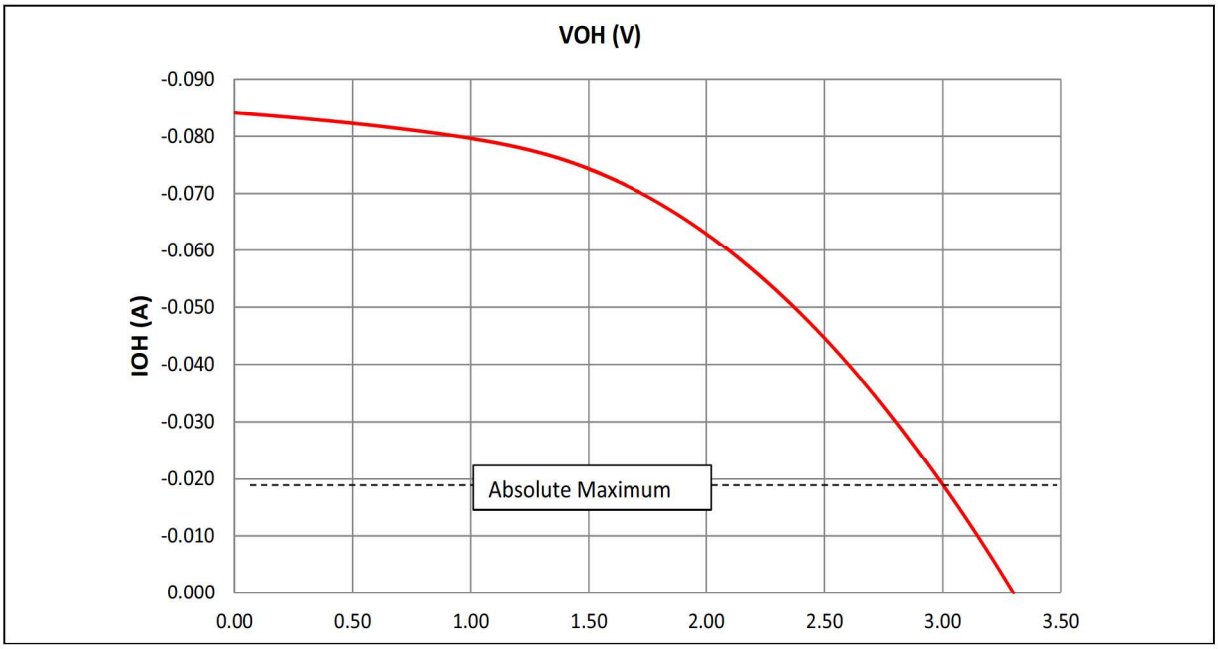

FIGURE 40-25: VOL – 8x DRIVER PINS

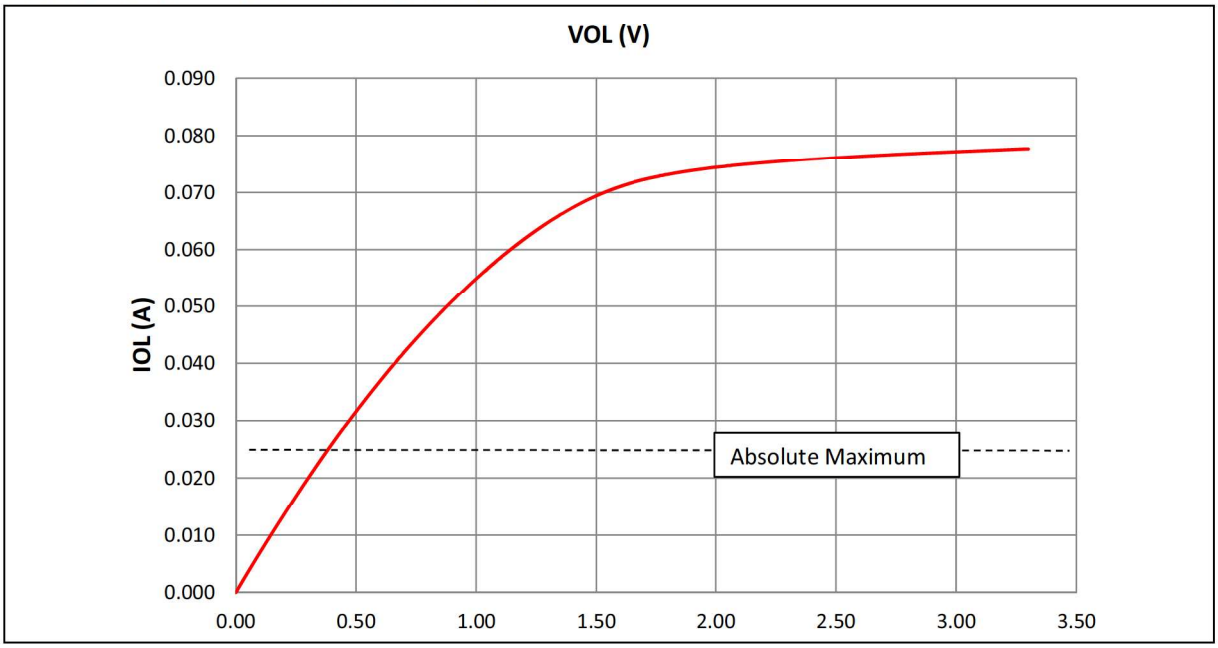

 © 2020 Microchip Technology Inc.

FIGURE 40-26: TYPICAL TEMPERATURE SENSOR VOLTAGE

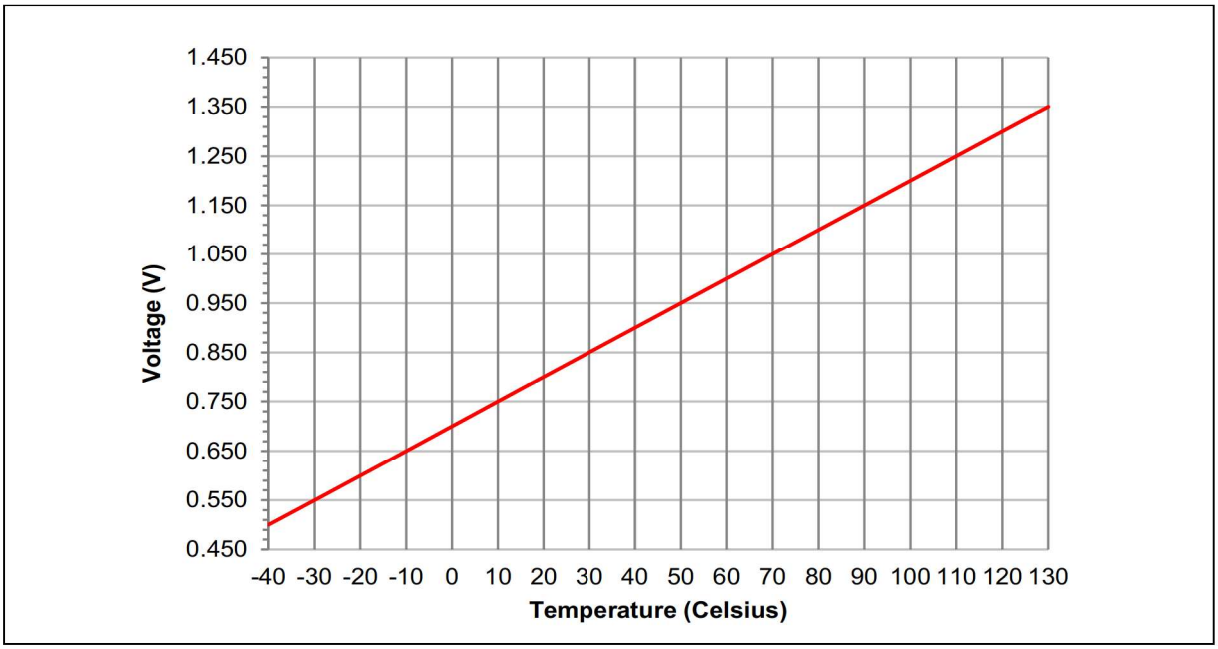

40.1.4 RF CHARACTERISTICS

For details on the RF performance, refer to **Section 40.2.3 "Radio Performance"**.

40.2 WFI32E01 Module Electrical Specifications

The absolute maximum ratings for the WFI32E01 module are listed below. Exposure to these maximum rating conditions for extended periods may affect device reliability. Functional operation of the device at these or any other conditions, above the parameters indicated in the operation listings of this specification, is not implied.

Note: All the electrical specification of the PIC32MZ W1 applies to the WFI32E01 module as well unless specified explicitly.

Absolute Maximum Ratings

Ambient temperature under bias ..... -40°C to +85ºC
Storage temperature ..... -40°C to +125°C
Voltage on V_{DD} with respect to GND ..... -0.3V to +4.0V
Voltage on V_{BUS} with respect to GND ..... -0.3V to +5.25V
Maximum current out of GND pin(s) ..... 520 mA
Maximum current into VDD pin(s)(2) ..... 520 mA
ESD Qualification:
Human Body Model (HBM) (JEDEC JS-001-2017) 2000V
Changed Device Model (CDM) (JEDEC JS-002-2018) 500V

Note 1: Stresses above those listed under **"Absolute Maximum Ratings"** may cause permanent damage to the device. This is a stress rating only and functional operation of the device at those or any other conditions, above those indicated in the operation listings of this specification, is not implied. Exposure to maximum rating conditions for extended periods may affect device reliability.

2: The maximum allowable current is a function of the device's maximum power dissipation.

TABLE 40-38: RECOMMENDED OPERATING CONDITIONS

Symbol	Parameter	Min.	Typ.	Max.	Unit
V_{DD}	Power supply input voltage	3.0	3.3	3.6	V
V_{BUS}	USB bus voltage	4.75	—	5.25	V

 © 2020 Microchip Technology Inc.

40.2.1 DC CHARACTERISTICS

TABLE 40-39: WI-FI® CURRENT

DC CHARACTERISTICS		Standard Operating Conditions: 3.0V to 3.6V (unless otherwise stated) Operating temperature -40°C ≤ TA ≤ +85°C	
Device States	**Code Rate**	**Output Power (Typ.) (dBm)**	**Current (Typ.) (mA)(3)**
On_Transmit(5)	802.11b 1 Mbps	20.5	414
	802.11b 11 Mbps	20.5	406
	802.11g 6 Mbps	19.5	389
	802.11g 54 Mbps	18.5	363
	802.11n MCS0	18.5	380
	802.11n MCS7	17.0	340
On_Receive	802.11b 1 Mbps	—	216
	802.11b 11 Mbps	—	216
	802.11g 6 Mbps	—	216
	802.11g 54 Mbps	—	216
	802.11n MCS0	—	216
	802.11n MCS7	—	216

Note 1: Measured along with RF matching network and FEM circuit (assume 50Ω impedance).

2: The test conditions for IDD measurements are as follows:
- CPU, Flash Panel and SRAM data memory are operational.
- CPU is in Wi-Fi RF Test mode.
- All peripheral modules are disabled (ON bit = 0) but the associated PMD bit is cleared.
- WDT and FSCM are disabled.
- All I/O pins are configured as inputs and pulled to VSS.
- MCLR = VDD.

3: Data in the "Typ." column is at 3.3V, 25°C unless otherwise stated.

4: This parameter is characterized, but not tested in manufacturing.

5: Tested at channel 7 in Fixed Mode Gain.

Note: For details on the DC characteristics, refer to **40.1.1 "DC Characteristics"**.

40.2.2 AC CHARACTERISTICS AND TIMING PARAMETERS

Note: For details on the AC Characteristics and Timing Parameters, refer to **Section 40.1.2 "AC Characteristics and Timing Parameters"**.

40.2.3 RADIO PERFORMANCE

This section describes the Wi-Fi radio specifications and performance characteristics.

TABLE 40-40: RADIO SPECIFICATIONS

Feature	Description
WLAN standards	IEEE 802.11b, IEEE 802.11g, and IEEE 802.11n
Frequency range	2.412 GHz ~ 2,472 GHz (2400 ~ 2483.5 MHz ISM band)
Number of channels	11 for North America and 13 for Europe and Japan

40.2.3.1 Receiver Performance

The following table provides the receiver performance characteristics of the WFI32E01 module.

TABLE 40-41: RECEIVER PERFORMANCE CHARACTERISTICS(1)

RF CHARACTERISTICS		Standard Operating Conditions: 3.0V to 3.6V (unless otherwise stated) Operating temperature -40°C ≤ TA ≤ +85°C			
Parameter	**Description**	**Min.**	**Typ.**	**Max.**	**Unit**
Frequency	—	2412	—	2472	MHz
Sensitivity 802.11b	1 Mbps DSSS	—	-99	—	dBm
	2 Mbps DSSS	—	-96.5	—	
	5.5 Mbps DSSS	—	-95	—	
	11 Mbps DSSS	—	-91.5	—	
Sensitivity 802.11g	6 Mbps OFDM	—	-93.5	—	dBm
	9 Mbps OFDM	—	-93.5	—	
	12 Mbps OFDM	—	-91.5	—	
	18 Mbps OFDM	—	-89.5	—	
	24 Mbps OFDM	—	-86.5	—	
	36 Mbps OFDM	—	-83	—	
	48 Mbps OFDM	—	-79	—	
	54 Mbps OFDM	—	-77.5	—	
Sensitivity 802.11n (Bandwidth at 20 MHz) (Both long GI and short GI)	MCS 0	—	-92.5	—	dBm
	MCS 1	—	-89.5	—	
	MCS 2	—	-87.5	—	
	MCS 3	—	-84.5	—	
	MCS 4	—	-81	—	
	MCS 5	—	-76.5	—	
	MCS 6	—	-75	—	
	MCS 7	—	-73	—	
Maximum Receive Signal level	1, 2 Mbps DSSS	-2	—	—	dBm
	5.5, 11Mbps DSSS	-2	—	—	
	6 Mbps OFDM	-2	—	—	
	54 Mbps OFDM	-7.5	—	—	
	MCS 0	-2	—	—	
	MCS 7	-7.5	—	—	

 © 2020 Microchip Technology Inc.

TABLE 40-41: RECEIVER PERFORMANCE CHARACTERISTICS(1) (CONTINUED)

RF CHARACTERISTICS		Standard Operating Conditions: 3.0V to 3.6V (unless otherwise stated) Operating temperature -40°C ≤ TA ≤ +85°C			
Parameter	**Description**	**Min.**	**Typ.**	**Max.**	**Unit**
Adjacent Channel Rejection	1 Mbps DSSS (30 MHz offset)	44.5	—	—	dB
	11 Mbps DSSS (25 MHz offset)	39.5	—	—	
	6 Mbps OFDM (25 MHz offset)	41.5	—	—	
	54 Mbps OFDM (25 MHz offset)	24.5	—	—	
	MCS 0 – 20 MHz Bandwidth (25 MHz offset)	35.5	—	—	
	MCS 7 – 20 MHz Bandwidth (25 MHz offset)	20.5	—	—	
RSSI Accuracy		-5	—	+5	dB

Note 1: Measured after RF matching network and FEM output (assume 50Ω impedance).

2: RF performance is ensured at 3.3V, 25°C, with a 2-3 dB change at boundary conditions.

3: The availability of some specific channels and/or operational frequency bands are country-dependent and should be programmed in the host product at the factory to match the intended destination. Regulatory bodies prohibit exposing the settings to the end user. This requirement needs to be taken care of via host implementation.

4: The host product manufacturer must ensure that the RF behavior adheres to the certification (for example, FCC, ISED) requirements when the module is installed in the final host product.

40.2.3.2 Transmitter Performance

The following table provides the transmitter performance characteristics of the WFI32E01 module.

TABLE 40-42: TRANSMITTER PERFORMANCE CHARACTERISTICS

RF CHARACTERISTICS		Standard Operating Conditions: 3.0V to 3.6V (unless otherwise stated) Operating temperature -40°C ≤ TA ≤ +85°C			
Parameter	**Description**	**Min.**	**Typ.(3)**	**Max.**	**Unit**
Frequency	—	2412	—	2472	MHz
Output power(1)(2) 802.11b	1 Mbps DSSS	—	20.5	—	dBm
	2 Mbps DSSS	—	20.5	—	
	5.5 Mbps DSSS	—	20.5	—	
	11 Mbps DSSS	—	20.5	—	
Output power(1)(2) 802.11g	6 Mbps OFDM	—	19.5	—	dBm
	9 Mbps OFDM	—	19.5	—	
	12 Mbps OFDM	—	19.5	—	
	18 Mbps OFDM	—	19.5	—	
	24 Mbps OFDM	—	19.5	—	
	36 Mbps OFDM	—	19.5	—	
	48 Mbps OFDM	—	19.5	—	
	54 Mbps OFDM	—	18.5	—	

TABLE 40-42: TRANSMITTER PERFORMANCE CHARACTERISTICS (CONTINUED)

RF CHARACTERISTICS		Standard Operating Conditions: 3.0V to 3.6V (unless otherwise stated) Operating temperature -40°C ≤ TA ≤ +85°C			
Parameter	**Description**	**Min.**	**Typ.(3)**	**Max.**	**Unit**
Output power(1)(2) 802.11n (Bandwidth at 20 MHz)	MCS 0	—	18.5	—	dBm
	MCS 1	—	18.5	—	
	MCS 2	—	18.5	—	
	MCS 3	—	18.5	—	
	MCS 4	—	18.5	—	
	MCS 5	—	18.5	—	
	MCS 6	—	18	—	
	MCS 7	—	17	—	
Transmit Power Control (TPC) Accuracy	—	—	±1.5(2)	—	dB
Harmonic Output Power (Radiated, Regulatory mode)	2nd	—	—	-41.25(7)	dBm/MHz
	3rd	—	—	-41.25(7)	

Note 1: Measured at IEEE 802.11 specification compliant EVM/Spectral mask.

2: Measured after RF matching network and FEM output (assume 50Ω impedance).

3: RF performance is ensured at 3.3V, 25°C, with a 2-3 dB change at boundary conditions.

4: With respect to TX power, different (higher/lower) RF output power settings may be used for specific antennas and/or enclosures, in which case re-certification may be required.

5: The availability of some specific channels and/or operational frequency bands are country-dependent and should be programmed in the host product at the factory to match the intended destination. Regulatory bodies prohibit exposing the settings to the end user. This requirement needs to be taken care of via host implementation.

6: The host product manufacturer must ensure that the RF behavior adheres to the certification (for example, FCC, ISED) requirements when the module is installed in the final host product.

7: FCC Radiated Emission limits (Restricted Band).

 © 2020 Microchip Technology Inc.

41.0 PACKAGING INFORMATION

This chapter provides the information on package markings, dimension and footprint of the PIC32MZ1025W104 SoC and WFI32E01 module.

41.1 PIC32MZ1025W104 SoC Packaging Information

41.1.1 PIC32MZ1025W104 SOC PACKAGE MARKING

FIGURE 41-1: PIC32MZ1025W104 SOC PACKAGE MARKINGS

132-Lead DQFN (10x10x0.9 mm)

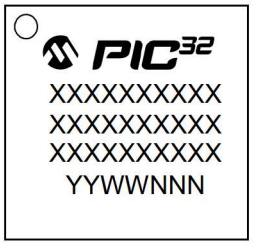

Example

Legend:	XX...X	Customer-specific information
	Y	Year code (last digit of calendar year)
	YY	Year code (last 2 digits of calendar year)
	WW	Week code (week of January 1 is week '01')
	NNN	Alphanumeric traceability code
		Pb-free JEDEC designator for Matte Tin (Sn)
	*	This package is Pb-free. The Pb-free JEDEC designator (e3) can be found on the outer packaging for this package.

Note: In the event the full Microchip part number cannot be marked on one line, it will be carried over to the next line, thus limiting the number of available characters for customer-specific information.

41.1.2 PIC32MZ1025W104 SOC PACKAGING DIMENSION

This section provides the package dimension details of PIC32MZ1025W104.

Note: For the most current package drawings, see the Microchip Packaging Specification located at http://www.microchip.com/packaging.

FIGURE 41-2: PIC32MZ1025W104 SOC PACKAGE DRAWINGS

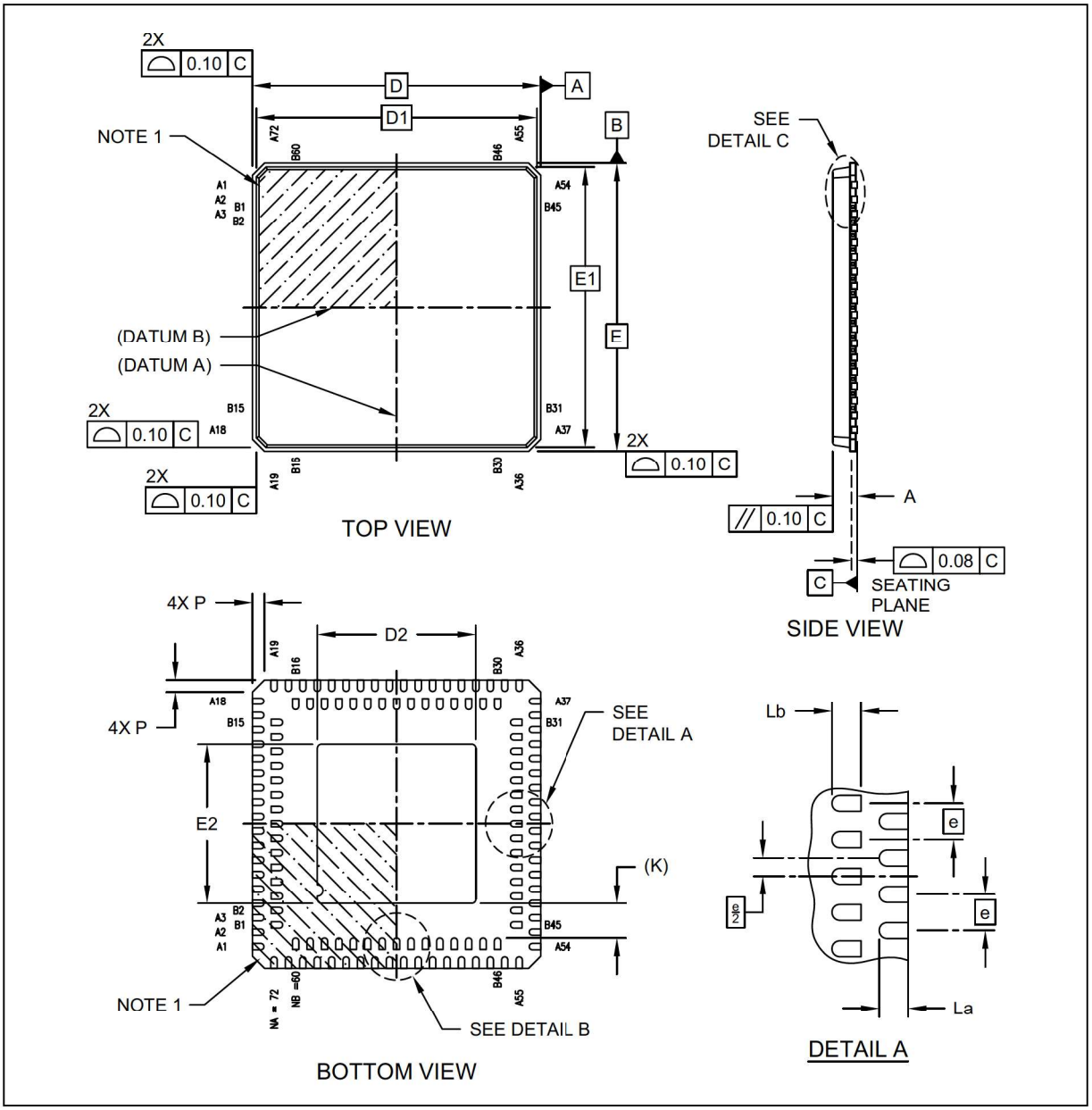

 © 2020 Microchip Technology Inc.

FIGURE 41-3: PIC32MZ1025W104 SOC PACKAGE DRAWINGS - CONTD.,

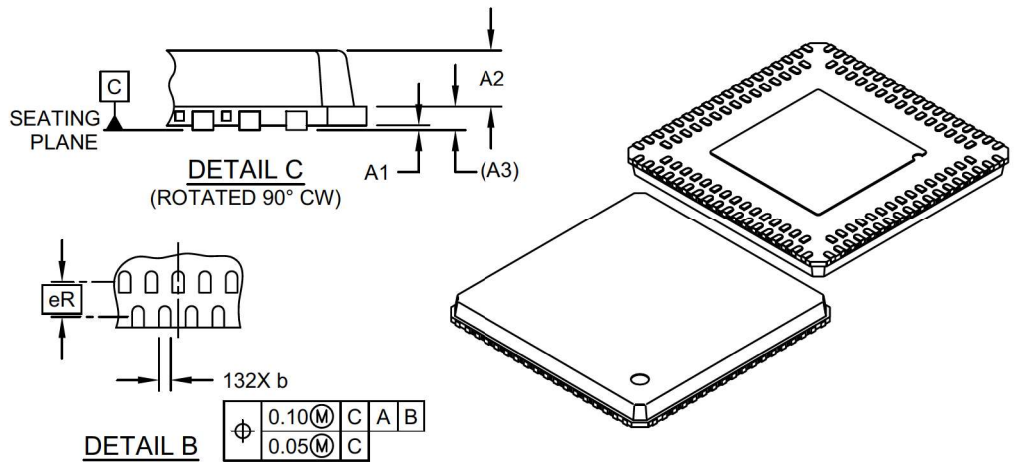

Units		MILLIMETERS		
Dimension Limits		MIN	NOM	MAX
Number of Terminals	N		132	
Terminals in Outer Row A	NA		72	
Terminals in Inner Row B	NB		60	
Pitch	e		0.50 BSC	
Pitch Between Rows	eR		0.65 BSC	
Overall Height	A	0.80	0.85	0.90
Standoff	A1	0.00	0.01	0.05
Mold Cap Height	A2	0.55	0.60	0.65
Base Thickness	A3		0.25 REF	
Overall Length	D		10.00 BSC	
Mold Cap Length	D1		9.73 BSC	
Exposed Pad Length	D2	5.40	5.50	5.60
Overall Width	E		10.00 BSC	
Mold Cap Width	E1		9.73 BSC	
Exposed Pad Width	E2	5.40	5.50	5.60
Terminal Length, Outer Row	La	0.30	0.40	0.50
Terminal Length, Inner Row	Lb	0.30	0.40	0.50
Terminal Width	b	0.17	0.22	0.27
Terminal-to-Exposed-Pad	K		0.20 MIN REF	
Corner Chamfer	P	0.24	0.42	0.60

Notes:

1. Pin 1 visual index feature may vary, but must be located within the hatched area.
2. Package is punch singulated
3. Dimensioning and tolerancing per ASME Y14.5M
   BSC: Basic Dimension. Theoretically exact value shown without tolerances.
   REF: Reference Dimension, usually without tolerance, for information purposes only.

41.1.3 PIC32MZ1025W104 SOC RECOMMENDED FOOTPRINT

The following figure illustrates the recommended footprint for the PIC32MZ1025W104.

FIGURE 41-4: RECOMMENDED FOOTPRINT FOR THE PIC32MZ1025W104

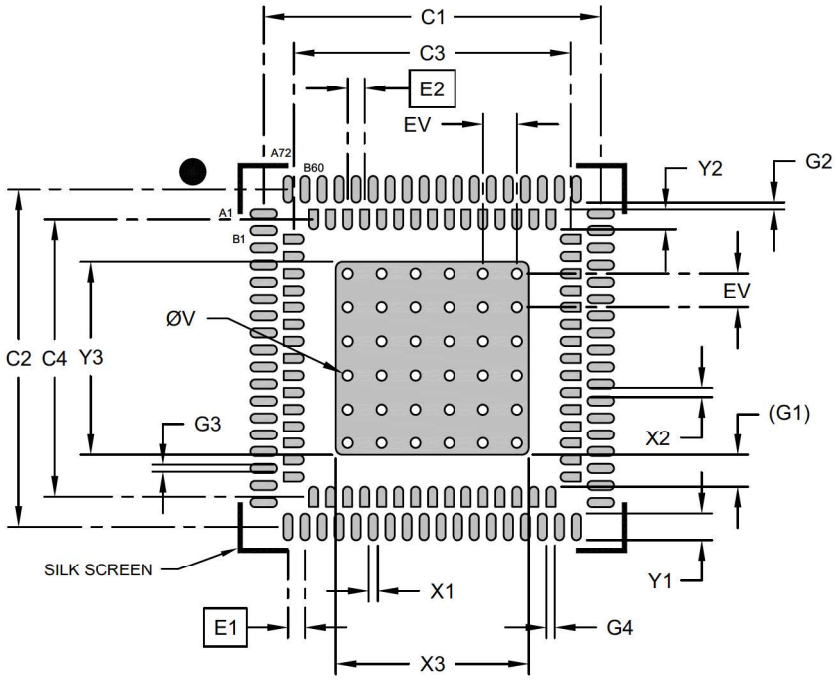

RECOMMENDED LAND PATTERN

Units		MILLIMETERS		
Dimension Limits		MIN	NOM	MAX
Outer Contact Pitch	E1		0.50 BSC	
Inner Contact Pitch	E2		0.50 BSC	
Outer Contact Pad Width (X72)	X1			0.30
Inner Contact Pad Width (X60)	X2			0.30
Optional Center Pad Width	X3			5.60
Optional Center Pad Length	Y3			5.60
Outer Contact Pad Spacing	C1		9.93	
Outer Contact Pad Spacing	C2		9.93	
Inner Contact Pad Spacing	C3		8.16	

Units		MILLIMETERS		
Dimension Limits		MIN	NOM	MAX
Inner Contact Pad Spacing	C4		8.16	
Outer Contact Pad Length (X72)	Y1			0.78
Inner Contact Pad Length (X60)	Y2			0.59
Contact Pad to Center Pad (X60)	G1		1.20 REF	
Inner Pad Row to Outer Pad Row	G2	0.20		
Contact Pad to Contact Pad (X68)	G3	0.20		
Contact Pad to Contact Pad (X56)	G4	0.20		
Thermal Via Diameter	V		0.30	
Thermal Via Pitch	EV		1.00	

Notes:

1. Dimensioning and tolerancing per ASME Y14.5M
   BSC: Basic Dimension. Theoretically exact value shown without tolerances.
2. For best soldering results, thermal vias, if used, should be filled or tented to avoid solder loss during reflow process

 © 2020 Microchip Technology Inc.

41.2 WFI32E01 Module Packaging Information

41.2.1 WFI32E01 MODULE PACKAGE MARKING

FIGURE 41-5: WFI32E01 MODULE PACKAGE MARKINGS

Legend:

XX....X	Module part number and version and regulatory designator
YY:	Year code (last 2 digits of calendar year)
WW	Week code (week of January 1 is week "01")
NNN	Alphanumeric traceability code

41.2.2 WFI32E01 MODULE PACKAGING DIMENSION

Note: Module dimensions mentioned in the following figure are applicable to the PCB antenna and U.FL connector variants.

FIGURE 41-6: 54-PIN RF MODULE WITH SHIELD (6YX) - 20.5X24.5 MM [MODULE]

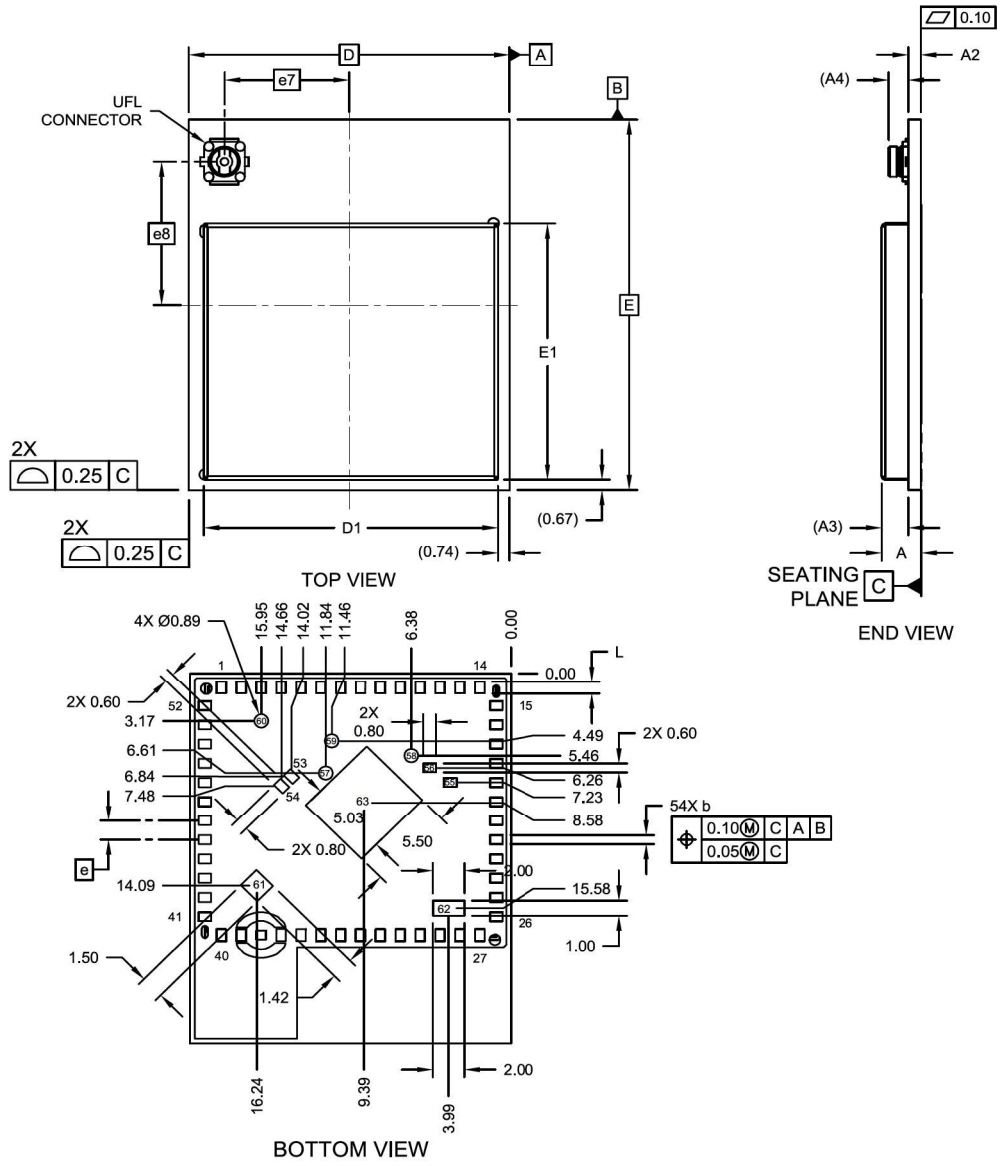

Notes:
1. All dimensions are in millimeter.
2. Pins 55-60 are used only for factory testing purpose.
3. Pins 61-63 are used as GND PADs.

 © 2020 Microchip Technology Inc.

FIGURE 41-7: 54-PIN RF MODULE WITH SHIELD (6YX) - 20.5X24.5 MM [MODULE]

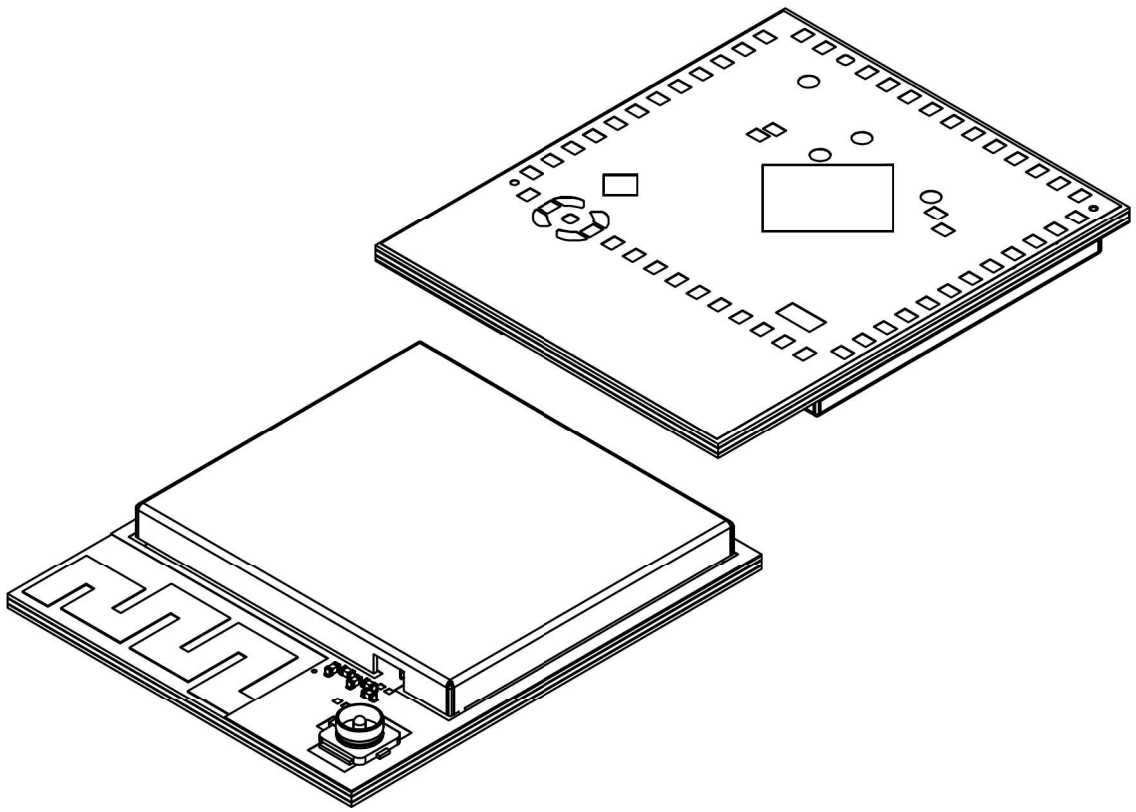

Units		MILLIMETERS		
Dimension Limits		MIN	NOM	MAX
Number of Terminals	N		54	
Overall Height	A	2.40	2.50	2.60
PCB Thickness	A2	0.70	0.80	0.90
Shield Height	A3		1.70 REF	
UFL Connector Height	A4		1.25 REF	
Overall Length	D		20.50 BSC	
Overall Width	E		24.50 BSC	
Shield Length	D1	18.70	18.80	18.90
Shield Width	E1	16.90	17.00	17.10
Terminal Width	b	0.50	0.60	0.70
Terminal Length	L	0.70	0.80	0.90

41.2.3 WFI32E01 MODULE RECOMMENDED FOOTPRINT

FIGURE 41-8: RECOMMENDED MODULE FOOTPRINT ON THE HOST BOARD

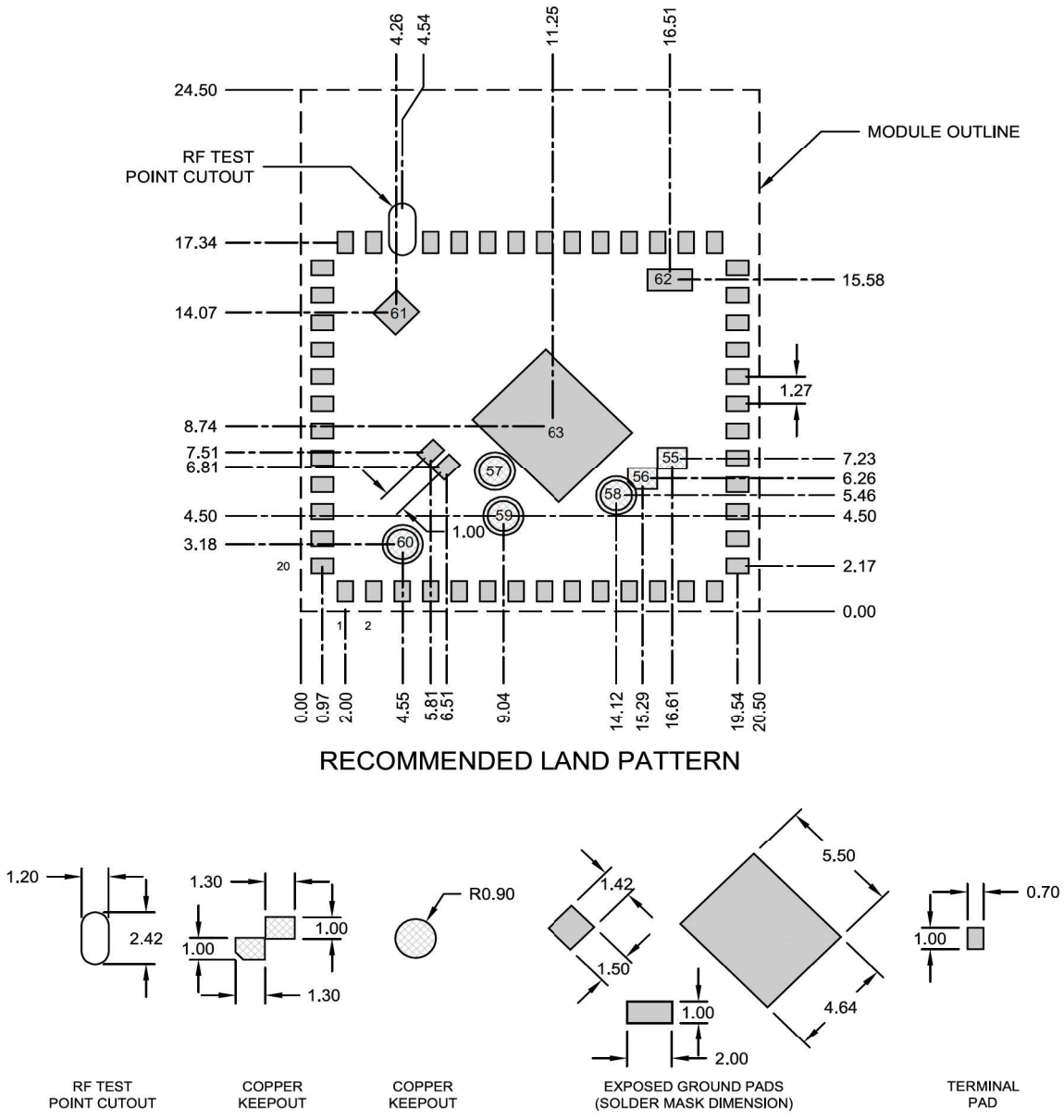

Notes:
1. All dimensions are in millimeter.
2. Pins 55-60 are used only for factory testing purpose.
3. Pins 61-63 are used as GND PADs.

Note: For routing guidelines, refer to **Section 3.4 "WFI32E01 Module Routing Guidelines"**.

 © 2020 Microchip Technology Inc.

APPENDIX A: REGULATORY APPROVALS

The WFI32E01PC module has received regulatory approval from the following countries:

- United States/FCC ID: 2ADHKWFI32E01
- Canada/ISED
  - IC: 20266-WFI32E01
  - HVIN: WFI32E01PC
  - PMN: WFI32E01
- Europe/CE

The WFI32E01PE module has received regulatory approval from the following countries:

- United States/FCC ID: 2ADHKWFI32E01
- Canada/ISED
  - IC: 20266-WFI32E01
  - HVIN: WFI32E01PE
  - PMN: WFI32E01
- Europe/CE

The WFI32E01UC module has received regulatory approval from the following countries:

- United States/FCC ID: 2ADHKWFI32E01
- Canada/ISED
  - IC: 20266-WFI32E01
  - HVIN: WFI32E01UC
  - PMN: WFI32E01
- Europe/CE

The WFI32E01UE module has received regulatory approval from the following countries:

- United States/FCC ID: 2ADHKWFI32E01
- Canada/ISED
  - IC: 20266-WFI32E01
  - HVIN: WFI32E01UE
  - PMN: WFI32E01
- Europe/CE

A.1 United States

The WFI32E01PC/WFI32E01PE/WFI32E01UC/WFI32E01UE modules have received Federal Communications Commission (FCC) CFR47 Telecommunications, Part 15 Subpart C “Intentional Radiators” single-modular approval in accordance with Part 15.212 Modular Transmitter approval. Single-modular transmitter approval is defined as a complete RF transmission sub-assembly, designed to be incorporated into another device, that must demonstrate compliance with FCC rules and policies independent of any host. A transmitter with a modular grant can be installed in different end-use products (referred to as a host, host product, or host device) by the grantee or other equipment manufacturer, then the host product may not require additional testing or equipment authorization for the transmitter function provided by that specific module or limited module device.

The user must comply with all of the instructions provided by the Grantee, which indicate installation and/or operating conditions necessary for compliance.

The host product itself is required to comply with all other applicable FCC equipment authorizations regulations, requirements and equipment functions that are not associated with the transmitter module portion. For example, compliance must be demonstrated: to regulations for other transmitter components within a host product; to requirements for unintentional radiators (Part 15 Subpart B), such as digital devices, computer peripherals, radio receivers, etc.; and to additional authorization requirements for the non-transmitter functions on the transmitter module (i.e., Suppliers Declaration of Conformity (SDoC) or certification) as appropriate (for example, Bluetooth and Wi-Fi transmitter modules may also contain digital logic functions).

A.1.1 LABELING AND USER INFORMATION REQUIREMENTS

The WFI32E01PC/WFI32E01PE/WFI32E01UC/WFI32E01UE modules have been labeled with its own FCC ID number, and if the FCC ID is not visible when the module is installed inside another device, then the outside of the finished product into which the module is installed must also display a label referring to the enclosed module. This exterior label can use wording as follows:

For the WFI32E01PC/WFI32E01PE/WFI32E01UC/WFI32E01UE:

> Contains Transmitter Module
> FCC ID: 2ADHKWFI32E01
>
> or
>
> Contains FCC ID: 2ADHKWFI32E01
>
> **This device complies with Part 15 of the FCC Rules. Operation is subject to the following two conditions: (1) this device may not cause harmful interference, and (2) this device must accept any interference received, including interference that may cause undesired operation**

A user's manual for the finished product should include the following statement:

> This equipment has been tested and found to comply with the limits for a Class B digital device, pursuant to part 15 of the FCC Rules. These limits are designed to provide reasonable protection against harmful interference in a residential installation. This equipment generates, uses and can radiate radio frequency energy, and if not installed and used in accordance with the instructions, may cause harmful interference to radio communications. However, there is no guarantee that interference will not occur in a particular installation. If this equipment does cause harmful interference to radio or television reception, which can be determined by turning the equipment off and on, the user is encouraged to try to correct the interference by one or more of the following measures:
>
> - Reorient or relocate the receiving antenna
> - Increase the separation between the equipment and receiver
> - Connect the equipment into an outlet on a circuit different from that to which the receiver is connected
> - Consult the dealer or an experienced radio/TV technician for help

Additional information on labeling and user information requirements for Part 15 devices can be found in KDB Publication 784748, which is available at the FCC Office of Engineering and Technology (OET) Laboratory Division Knowledge Database (KDB) https://apps.fcc.gov/oetcf/kdb/index.cfm

A.1.2 RF EXPOSURE

All transmitters regulated by FCC must comply with RF exposure requirements. KDB 447498 General RF Exposure Guidance provides guidance in determining whether proposed or existing transmitting facilities, operations or devices comply with limits for human exposure to Radio Frequency (RF) fields adopted by the Federal Communications Commission (FCC).

From the FCC Grant: Power output listed is conducted. Single Modular Approval. This module is granted for use in mobile only configuration as described in this filing.

Approval is limited to OEM installation only.

The antenna(s) used for this transmitter must be installed to provide a separation distance of at least 8 cm from all persons and must not be co-located or operating in conjunction with any other antenna or transmitter, except in accordance with FCC multi-transmitter product procedures. OEM integrators and end-users must be provided with specific operating instructions for satisfying RF exposure compliance requirements.

A.1.3 APPROVED ANTENNAS

To maintain modular approval in the United States, only the antenna types that have been tested shall be used. It is permissible to use different antenna, provided the same antenna type, antenna gain (equal to or less than), with similar in-band and out-of band characteristics (refer to specification sheet for cutoff frequencies).

For WFI32E01PC/WFI32E01PE, the approval is received using the integral PCB antenna.

For WFI32E01UC/WFI32E01UE, approved antennas are listed in the Table 3-3.

A.1.4 MODULE INTEGRATION IN THE HOST PRODUCT

Host products are to ensure continued compliance as per KDB 996369 Module Integration Guide.

A.1.5 HELPFUL WEB SITES

Federal Communications Commission (FCC): https://www.fcc.gov/

FCC Office of Engineering and Technology (OET) Laboratory Division Knowledge Database (KDB): https://apps.fcc.gov/oetcf/kdb/index.cfm

A.2 Canada

The WFI32E01PC/WFI32E01PE/WFI32E01UC/WFI32E01UE modules have been certified for use in Canada under Innovation, Science and Economic Development Canada (ISED, formerly Industry Canada) Radio Standards Procedure (RSP) RSP-100, Radio Standards Specification (RSS) RSS-Gen and RSS-247. Modular approval permits the installation of a module in a host device without the need to recertify the device.

A.2.1 LABELING AND USER INFORMATION REQUIREMENTS

Labeling Requirements (from RSP-100, Issue 12, Section 5): The host product shall be properly labeled to identify the module within the host device.

The Innovation, Science and Economic Development Canada certification label of a module shall be clearly visible at all times when installed in the host product, otherwise the host device must be labeled to display the Innovation, Science and Economic Development Canada certification number of the module, preceded by the word "Contains", or similar word expressing the same meaning, as follows:

 © 2020 Microchip Technology Inc.

For the WFI32E01PC/WFI32E01PE/WFI32E01UC/WFI32E01UE:

Contains IC: 20266-WFI32E01

User Manual Notice for License-Exempt Radio Apparatus (from Section 8.4 RSS-Gen, Issue 5, March 2019): User manuals for license-exempt radio apparatus shall contain the following or equivalent notice in a conspicuous location in the user manual or alternatively on the device or both:

This device contains license-exempt transmitter(s)/receiver(s) that comply with Innovation, Science and Economic Development Canada's license-exempt RSS(s). Operation is subject to the following two conditions:

1. This device may not cause interference;

2. This device must accept any interference, including interference that may cause undesired operation of the device.

L'émetteur/récepteur exempt de licence contenu dans le présent appareil est conforme aux CNR d'Innovation, Sciences et Développement économique Canada applicables aux appareils radio exempts de licence. L'exploitation est autorisée aux deux conditions suivantes:

1. L'appareil ne doit pas produire de brouillage;

2. L'appareil doit accepter tout brouillage radioélectrique subi, même si le brouillage est susceptible d'en compromettre le fonctionnement.

Transmitter Antenna (From Section 6.8 RSS-GEN, Issue 5, March 2019): User manuals, for transmitters shall display the following notice in a conspicuous location:

This radio transmitter [IC: 20266-WFI32E01] has been approved by Innovation, Science and Economic Development Canada to operate with the antenna types listed below, with the maximum permissible gain indicated. Antenna types not included in this list that have a gain greater than the maximum gain indicated for any type listed are strictly prohibited for use with this device.

Le présent émetteur radio [IC: 20266-WFI32E01] a été approuvé par Innovation, Sciences et Développement économique Canada pour fonctionner avec les types d'antenne énumérés cidessous et ayant un gain admissible maximal. Les types d'antenne non inclus dans cette liste, et dont le gain est supérieur au gain maximal indiqué pour tout type figurant sur la liste, sont strictement interdits pour l'exploitation de l'émetteur.

Immediately following the above notice, the manufacturer shall provide a list of all antenna types approved for use with the transmitter, indicating the maximum permissible antenna gain (in dBi) and required impedance for each.

A.2.2 RF EXPOSURE

All transmitters regulated by the Innovation, Science and Economic Development Canada (ISED) must comply with RF exposure requirements listed in RSS-102 - Radio Frequency (RF) Exposure Compliance of Radio communication Apparatus (All Frequency Bands).

This transmitter is restricted for use with a specific antenna tested in this application for certification, and must not be co-located or operating in conjunction with any other antenna or transmitters, except in accordance with Innovation, Science and Economic Development Canada multi-transmitter guidelines.

The module antenna must be installed to meet the RF exposure compliance separation distance of "20 cm" and any additional testing and authorization process as required. The host integrator installing this module into their product must ensure that the final composite product complies with the ISED requirements by a technical assessment.

L'antenne du module doit être installé pour répondre à la conformité en matière d'exposition RF distance de séparation de 20 "cm" et tout d'autres tests et processus d'autorisation au besoin. L'hôte integrator l'installation de ce module dans leur produit final doit s'assurer que le produit est conforme à la composite Exigences ISED par une évaluation technique.

A.2.3 APPROVED ANTENNAS

For WFI32E01PC/WFI32E01PE, the approval is received using the integral PCB antenna.

For WFI32E01UC/WFI32E01UE, approved antennas are listed in the Table 3-3.

A.2.4 HELPFUL WEBSITES

Innovation, Science and Economic Development Canada (ISED): http://www.ic.gc.ca/

A.3 Europe

The WFI32E01PC/WFI32E01PE/WFI32E01UC/ WFI32E01UE modules are Radio Equipment Directive (RED) assessed, CE marked, and have been manufactured and tested with the intention of being integrated into a final product.

The WFI32E01PC/WFI32E01PE/WFI32E01UC/ WFI32E01UE modules have been tested to RED 2014/53/EU Essential Requirements mentioned in the following European Compliance table.

TABLE A-1: EUROPEAN COMPLIANCE

Certification	Standards	Article
Safety	EN 62368	3.1(a)
Health	EN 62311	
Electro Magnetic Compatibility (EMC)	EN 301 489-1	3.1(b)
	EN 301 489-17	
Radio	EN 300 328	3.2

The ETSI provides guidance on modular devices in "*Guide to the application of harmonised standards covering Article 3.1(b) and Article 3.2 of the Directive 2014/53/EU RED to multi-radio and combined radio and non-radio equipment*" document available at http://www.etsi.org/deliver/etsi_eg/203300_203399/203367/01.01.01_60/eg_203367v010101p.pdf.

Note:	To maintain conformance to the standards listed in the preceding European Compliance table, the module shall be installed in accordance with the installation instructions in this data sheet and shall not be modified. When integrating a radio module into a completed product, the integrator becomes the manufacturer of the final product and is therefore responsible for demonstrating compliance of the final product with the essential requirements against the RED.

A.3.1 LABELING AND USER INFORMATION REQUIREMENTS

The label on the final product, which contains the WFI32E01PC/WFI32E01PE/WFI32E01UC/ WFI32E01UE modules must follow CE marking requirements.

A.3.2 CONFORMITY ASSESSMENT

From ETSI Guidance Note EG 203367, section 6.1 Non-radio products are combined with a radio product:

If the manufacturer of the combined equipment installs the radio product in a host non-radio product in equivalent assessment conditions (i.e., host equivalent to the one used for the assessment of the radio product) and according to the installation instructions for the radio product, then no additional assessment of the combined equipment against article 3.2 of the RED is required.

A.3.3 APPROVED ANTENNAS

For WFI32E01PC/WFI32E01PE, the approval is received using the integral PCB antenna.

For WFI32E01UC/WFI32E01UE, the approval is received using the antennas listed in Table 3-3.

A.3.3.1 SIMPLIFIED EU DECLARATION OF CONFORMITY

Hereby, Microchip Technology Inc. declares that the radio equipment type WFI32E01PC/WFI32E01PE/ WFI32E01UC/WFI32E01UE is in compliance with Directive 2014/53/EU.

The full text of the EU declaration of conformity for this product is available at http://www.microchip.com/PIC32MZW1 (available under *Documents* > *Certifications*).

A.3.4 HELPFUL WEBSITES

A document that can be used as a starting point in understanding the use of Short Range Devices (SRD) in Europe is the European Radio Communications Committee (ERC) Recommendation 70-03 E, which can be downloaded from the European Communications Committee (ECC) at: http://www.ecodocdb.dk/.

Additional helpful web sites are:

- Radio Equipment Directive (2014/53/EU): https://ec.europa.eu/growth/single-market/european-standards/harmonised-standards/red_en
- European Conference of Postal and Telecommunications Administrations (CEPT): http://www.cept.org
- European Telecommunications Standards Institute (ETSI): http://www.etsi.org
- The Radio Equipment Directive Compliance Association (REDCA): http://www.redca.eu/

 © 2020 Microchip Technology Inc.

A.4 Other Regulatory Jurisdictions

- For information on the approvals received from the other countries' jurisdictions, which are not covered here, are available in the http://www.microchip.com/PIC32MZW1 (available under *Documents* > *Certifications*).
- If the customer needs another regulatory jurisdiction certification or to recertify the module for other reasons, contact Microchip for the required utilities and documentation.

 © 2020 Microchip Technology Inc.

APPENDIX B: DOCUMENT REVISION HISTORY

Revision A (September 2020)

This is the initial version of this document.

 © 2020 Microchip Technology Inc.

THE MICROCHIP WEB SITE

Microchip provides online support via our WWW site at www.microchip.com. This web site is used as a means to make files and information easily available to customers. Accessible by using your favorite Internet browser, the web site contains the following information:

- **Product Support** – Data sheets and errata, application notes and sample programs, design resources, user's guides and hardware support documents, latest software releases and archived software
- **General Technical Support** – Frequently Asked Questions (FAQ), technical support requests, online discussion groups, Microchip consultant program member listing
- **Business of Microchip** – Product selector and ordering guides, latest Microchip press releases, listing of seminars and events, listings of Microchip sales offices, distributors and factory representatives

CUSTOMER CHANGE NOTIFICATION SERVICE

Microchip's customer notification service helps keep customers current on Microchip products. Subscribers will receive e-mail notification whenever there are changes, updates, revisions or errata related to a specified product family or development tool of interest.

To register, access the Microchip web site at www.microchip.com. Under "Support", click on "Customer Change Notification" and follow the registration instructions.

CUSTOMER SUPPORT

Users of Microchip products can receive assistance through several channels:

- Distributor or Representative
- Local Sales Office
- Field Application Engineer (FAE)
- Technical Support

Customers should contact their distributor, representative or Field Application Engineer (FAE) for support. Local sales offices are also available to help customers. A listing of sales offices and locations is included in the back of this document.

Technical support is available through the web site at: http://microchip.com/support

 © 2020 Microchip Technology Inc.

Note the following details of the code protection feature on Microchip devices:

- Microchip products meet the specifications contained in their particular Microchip Data Sheet.
- Microchip believes that its family of products is secure when used in the intended manner and under normal conditions.
- There are dishonest and possibly illegal methods being used in attempts to breach the code protection features of the Microchip devices. We believe that these methods require using the Microchip products in a manner outside the operating specifications contained in Microchip's Data Sheets. Attempts to breach these code protection features, most likely, cannot be accomplished without violating Microchip's intellectual property rights.
- Microchip is willing to work with any customer who is concerned about the integrity of its code.
- Neither Microchip nor any other semiconductor manufacturer can guarantee the security of its code. Code protection does not mean that we are guaranteeing the product is "unbreakable." Code protection is constantly evolving. We at Microchip are committed to continuously improving the code protection features of our products. Attempts to break Microchip's code protection feature may be a violation of the Digital Millennium Copyright Act. If such acts allow unauthorized access to your software or other copyrighted work, you may have a right to sue for relief under that Act.

Information contained in this publication is provided for the sole purpose of designing with and using Microchip products. Information regarding device applications and the like is provided only for your convenience and may be superseded by updates. It is your responsibility to ensure that your application meets with your specifications.

THIS INFORMATION IS PROVIDED BY MICROCHIP "AS IS". MICROCHIP MAKES NO REPRESENTATIONS OR WARRANTIES OF ANY KIND WHETHER EXPRESS OR IMPLIED, WRITTEN OR ORAL, STATUTORY OR OTHERWISE, RELATED TO THE INFORMATION INCLUDING BUT NOT LIMITED TO ANY IMPLIED WARRANTIES OF NON-INFRINGEMENT, MERCHANTABILITY, AND FITNESS FOR A PARTICULAR PURPOSE OR WARRANTIES RELATED TO ITS CONDITION, QUALITY, OR PERFORMANCE.

IN NO EVENT WILL MICROCHIP BE LIABLE FOR ANY INDIRECT, SPECIAL, PUNITIVE, INCIDENTAL OR CONSEQUENTIAL LOSS, DAMAGE, COST OR EXPENSE OF ANY KIND WHATSOEVER RELATED TO THE INFORMATION OR ITS USE, HOWEVER CAUSED, EVEN IF MICROCHIP HAS BEEN ADVISED OF THE POSSIBILITY OR THE DAMAGES ARE FORESEEABLE. TO THE FULLEST EXTENT ALLOWED BY LAW, MICROCHIP'S TOTAL LIABILITY ON ALL CLAIMS IN ANY WAY RELATED TO THE INFORMATION OR ITS USE WILL NOT EXCEED THE AMOUNT OF FEES, IF ANY, THAT YOU HAVE PAID DIRECTLY TO MICROCHIP FOR THE INFORMATION. Use of Microchip devices in life support and/or safety applications is entirely at the buyer's risk, and the buyer agrees to defend, indemnify and hold harmless Microchip from any and all damages, claims, suits, or expenses resulting from such use. No licenses are conveyed, implicitly or otherwise, under any Microchip intellectual property rights unless otherwise stated.

For information regarding Microchip's Quality Management Systems, please visit www.microchip.com/quality.

Trademarks

The Microchip name and logo, the Microchip logo, Adaptec, AnyRate, AVR, AVR logo, AVR Freaks, BesTime, BitCloud, chipKIT, chipKIT logo, CryptoMemory, CryptoRF, dsPIC, FlashFlex, flexPWR, HELDO, IGLOO, JukeBlox, KeeLoq, Kleer, LANCheck, LinkMD, maXStylus, maXTouch, MediaLB, megaAVR, Microsemi, Microsemi logo, MOST, MOST logo, MPLAB, OptoLyzer, PackeTime, PIC, picoPower, PICSTART, PIC32 logo, PolarFire, Prochip Designer, QTouch, SAM-BA, SenGenuity, SpyNIC, SST, SST Logo, SuperFlash, Symmetricom, SyncServer, Tachyon, TempTrackr, TimeSource, tinyAVR, UNI/O, Vectron, and XMEGA are registered trademarks of Microchip Technology Incorporated in the U.S.A. and other countries.

APT, ClockWorks, The Embedded Control Solutions Company, EtherSynch, FlashTec, Hyper Speed Control, HyperLight Load, IntelliMOS, Libero, motorBench, mTouch, Powermite 3, Precision Edge, ProASIC, ProASIC Plus, ProASIC Plus logo, Quiet-Wire, SmartFusion, SyncWorld, Temux, TimeCesium, TimeHub, TimePictra, TimeProvider, Vite, WinPath, and ZL are registered trademarks of Microchip Technology Incorporated in the U.S.A.

Adjacent Key Suppression, AKS, Analog-for-the-Digital Age, Any Capacitor, AnyIn, AnyOut, BlueSky, BodyCom, CodeGuard, CryptoAuthentication, CryptoAutomotive, CryptoCompanion, CryptoController, dsPICDEM, dsPICDEM.net, Dynamic Average Matching, DAM, ECAN, EtherGREEN, In-Circuit Serial Programming, ICSP, INICnet, Inter-Chip Connectivity, JitterBlocker, KleerNet, KleerNet logo, memBrain, Mindi, MiWi, MPASM, MPF, MPLAB Certified logo, MPLIB, MPLINK, MultiTRAK, NetDetach, Omniscient Code Generation, PICDEM, PICDEM.net, PICkit, PICtail, PowerSmart, PureSilicon, QMatrix, REAL ICE, Ripple Blocker, SAM-ICE, Serial Quad I/O, SMART-I.S., SQI, SuperSwitcher, SuperSwitcher II, Total Endurance, TSHARC, USBCheck, VariSense, ViewSpan, WiperLock, Wireless DNA, and ZENA are trademarks of Microchip Technology Incorporated in the U.S.A. and other countries.

SQTP is a service mark of Microchip Technology Incorporated in the U.S.A.

The Adaptec logo, Frequency on Demand, Silicon Storage Technology, and Symmcom are registered trademarks of Microchip Technology Inc. in other countries.

GestIC is a registered trademark of Microchip Technology Germany II GmbH & Co. KG, a subsidiary of Microchip Technology Inc., in other countries.

All other trademarks mentioned herein are property of their respective companies.

© 2020, Microchip Technology Incorporated, All Rights Reserved.

ISBN: 978-1-5224-6586-7

Worldwide Sales and Service

AMERICAS

Corporate Office
2355 West Chandler Blvd.
Chandler, AZ 85224-6199
Tel: 480-792-7200
Fax: 480-792-7277
Technical Support:
http://www.microchip.com/support
Web Address:
www.microchip.com

Atlanta
Duluth, GA
Tel: 678-957-9614
Fax: 678-957-1455

Austin, TX
Tel: 512-257-3370

Boston
Westborough, MA
Tel: 774-760-0087
Fax: 774-760-0088

Chicago
Itasca, IL
Tel: 630-285-0071
Fax: 630-285-0075

Dallas
Addison, TX
Tel: 972-818-7423
Fax: 972-818-2924

Detroit
Novi, MI
Tel: 248-848-4000

Houston, TX
Tel: 281-894-5983

Indianapolis
Noblesville, IN
Tel: 317-773-8323
Fax: 317-773-5453
Tel: 317-536-2380

Los Angeles
Mission Viejo, CA
Tel: 949-462-9523
Fax: 949-462-9608
Tel: 951-273-7800

Raleigh, NC
Tel: 919-844-7510

New York, NY
Tel: 631-435-6000

San Jose, CA
Tel: 408-735-9110
Tel: 408-436-4270

Canada - Toronto
Tel: 905-695-1980
Fax: 905-695-2078

ASIA/PACIFIC

Australia - Sydney
Tel: 61-2-9868-6733

China - Beijing
Tel: 86-10-8569-7000

China - Chengdu
Tel: 86-28-8665-5511

China - Chongqing
Tel: 86-23-8980-9588

China - Dongguan
Tel: 86-769-8702-9880

China - Guangzhou
Tel: 86-20-8755-8029

China - Hangzhou
Tel: 86-571-8792-8115

China - Hong Kong SAR
Tel: 852-2943-5100

China - Nanjing
Tel: 86-25-8473-2460

China - Qingdao
Tel: 86-532-8502-7355

China - Shanghai
Tel: 86-21-3326-8000

China - Shenyang
Tel: 86-24-2334-2829

China - Shenzhen
Tel: 86-755-8864-2200

China - Suzhou
Tel: 86-186-6233-1526

China - Wuhan
Tel: 86-27-5980-5300

China - Xian
Tel: 86-29-8833-7252

China - Xiamen
Tel: 86-592-2388138

China - Zhuhai
Tel: 86-756-3210040

ASIA/PACIFIC

India - Bangalore
Tel: 91-80-3090-4444

India - New Delhi
Tel: 91-11-4160-8631

India - Pune
Tel: 91-20-4121-0141

Japan - Osaka
Tel: 81-6-6152-7160

Japan - Tokyo
Tel: 81-3-6880- 3770

Korea - Daegu
Tel: 82-53-744-4301

Korea - Seoul
Tel: 82-2-554-7200

Malaysia - Kuala Lumpur
Tel: 60-3-7651-7906

Malaysia - Penang
Tel: 60-4-227-8870

Philippines - Manila
Tel: 63-2-634-9065

Singapore
Tel: 65-6334-8870

Taiwan - Hsin Chu
Tel: 886-3-577-8366

Taiwan - Kaohsiung
Tel: 886-7-213-7830

Taiwan - Taipei
Tel: 886-2-2508-8600

Thailand - Bangkok
Tel: 66-2-694-1351

Vietnam - Ho Chi Minh
Tel: 84-28-5448-2100

EUROPE

Austria - Wels
Tel: 43-7242-2244-39
Fax: 43-7242-2244-393

Denmark - Copenhagen
Tel: 45-4485-5910
Fax: 45-4485-2829

Finland - Espoo
Tel: 358-9-4520-820

France - Paris
Tel: 33-1-69-53-63-20
Fax: 33-1-69-30-90-79

Germany - Garching
Tel: 49-8931-9700

Germany - Haan
Tel: 49-2129-3766400

Germany - Heilbronn
Tel: 49-7131-72400

Germany - Karlsruhe
Tel: 49-721-625370

Germany - Munich
Tel: 49-89-627-144-0
Fax: 49-89-627-144-44

Germany - Rosenheim
Tel: 49-8031-354-560

Israel - Ra'anana
Tel: 972-9-744-7705

Italy - Milan
Tel: 39-0331-742611
Fax: 39-0331-466781

Italy - Padova
Tel: 39-049-7625286

Netherlands - Drunen
Tel: 31-416-690399
Fax: 31-416-690340

Norway - Trondheim
Tel: 47-7288-4388

Poland - Warsaw
Tel: 48-22-3325737

Romania - Bucharest
Tel: 40-21-407-87-50

Spain - Madrid
Tel: 34-91-708-08-90
Fax: 34-91-708-08-91

Sweden - Gothenberg
Tel: 46-31-704-60-40

Sweden - Stockholm
Tel: 46-8-5090-4654

UK - Wokingham
Tel: 44-118-921-5800
Fax: 44-118-921-5820

© 2020 Microchip Technology Inc.