4000 at 105°C

· Standard 105°C
· General Industry

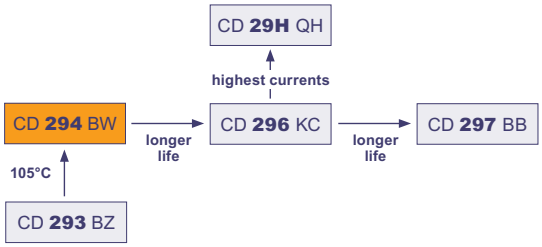

Item	Characteristics	
Operating Temperature Range (°C)	-40 ~ +105	-25 ~ +105
Voltage Range (V)	16 ~ 100	160 ~ 500
Capacitance Range (µF)	39 ~ 47 000	
Capacitance Tolerance (20°C, 120Hz)	± 20%	
Leakage Current (µA)	After 5 minutes at 20°C application of rated voltage, leakage current is not more than 0,01CV or 1,5mA, whichever is smaller C: Nominal Capacitance (µF) V: Rated Voltage (V)	

Dissipation Factor (20°C, 120Hz)

Rated Voltage (V)	16	25	35	50	63~100	160~400	450~500
Tan δ (max)	0,50	0,40	0,35	0,30	0,20	0,15	0,20

Stability at Low Temperature (Impedance Ratio at 120Hz)

Rated Voltage (V)	16~100	160~200	250~500
$Z_{-25°C} / Z_{+20°C}$	4		
$Z_{-40°C} / Z_{+20°C}$	15	-	

	Useful Life		Load Life	Endurance Test	Shelf Life
Lifetime	**4 000h**	>180 000h	2000h	3000h	1000h
Leakage Current	Not more than specified value		Not more than specified value	Not more than specified value	Not more than specified value
Capacity Change	Within ± 30% of initial value		Within ± 20% of initial value	Within ± 20% of initial value	Within ± 20% of initial value
Dissipation Factor	Not more than 300% of specified value		Not more than 200% of specified value	Not more than 130% of specified value	Not more than 200% of specified value
Condition: Applied Voltage Applied Current Applied Temperature Failure Rate Level	 U_R I_R 105°C ≤ 1% Failure Rate	 U_R 1,4 x I_R 40°C ≤ 1% Failure Rate	 U_R I_R 105°C guaranteed	 U_R I_R = 0 105°C	 U_R = 0 I_R = 0 105°C After test: U_R to be applied for 30min >24h before measurement

Multiplier for Ripple Current

Frequency Coefficient

Rated Voltage (V) \ Frequency	50Hz	120Hz	1kHz	10kHz	≥ 20kHz
≤ 100	0,95	1,00	1,10	1,15	1,15
160 ~ 250	0,87	1,00	1,11	1,18	1,20
≥ 350	0,80	1,00	1,14	1,14	1,20

Multiplier for Lifetime

Lifetime Diagram

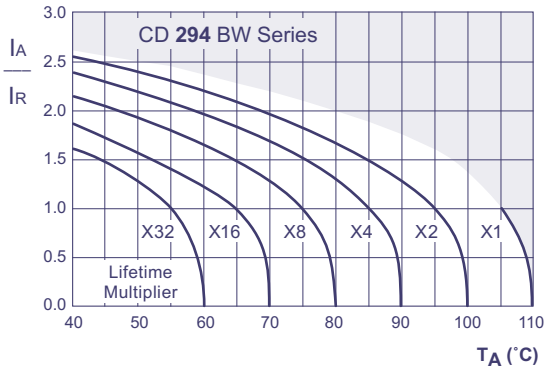

I_A = actual ripple current at 120Hz, I_R = rated ripple current at 120Hz, 105°C
Multiplier of Useful Life as a function of ambient temperature and ripple current load

Snap-In

Direct Contact & Support: Jianghai Europe GmbH +49 (0)2151 652088-0 info@jianghai-europe.com www.jianghai-europe.com v2008.1

Ratings for CD **294** BW Series

$U_{R.DC}$ (Surge Voltage) Code	Rated Capa-citance	Max ESR 20°C, 120Hz	Typ ESR 20°C, 120Hz	Max Ripple Current 105°C, 120Hz	Size Ø D x L
(V)	(µF)	(mΩ)	(mΩ)	(Arms)	(mm)
16 (20) 1C	6800	98	69	1,60	22 x 25
	10000	67	47	1,99	22 x 30
		67	47	1,99	25 x 25
	12000	56	39	2,28	22 x 35
		56	39	2,30	25 x 30
		56	39	2,38	30 x 25
	15000	45	31	2,64	22 x 40
		45	31	2,68	25 x 35
	18000	37	26	2,98	22 x 45
		37	26	3,04	25 x 40
		37	26	3,00	30 x 30
		37	26	3,10	35 x 25
	22000	31	22	3,40	25 x 45
		31	22	3,39	30 x 35
	27000	25	18	3,81	25 x 50
		25	18	3,83	30 x 40
		25	18	3,74	35 x 30
	33000	21	15	4,30	30 x 45
		21	15	4,24	35 x 35
	39000	18	12	4,74	30 x 50
		18	12	4,72	35 x 40
	47000	15	10	5,27	35 x 45
25 (32) 1E	4700	113	80	1,55	22 x 25
	6800	79	55	1,91	22 x 30
		79	55	1,91	25 x 25
	8200	65	46	2,14	22 x 35
		65	46	2,16	25 x 30
		65	46	2,25	30 x 25
	10000	54	38	2,40	22 x 40
		54	38	2,44	25 x 35
	12000	45	31	2,69	22 x 45
		45	31	2,74	25 x 40
		45	31	2,70	30 x 30
		45	31	2,80	35 x 25
	15000	36	25	3,15	25 x 45
		36	25	3,13	30 x 35
		36	25	3,22	35 x 30
	18000	30	21	3,54	25 x 50
		30	21	3,54	30 x 40
	22000	25	17	4,24	30 x 45
		25	17	3,96	35 x 35
	27000	20	14	4,75	35 x 45
	33000	17	12	5,39	35 x 50
35 (44) 1V	3300	141	99	1,43	22 x 25
	3900	120	84	1,65	22 x 30
	4700	99	70	1,78	25 x 25
	5600	83	59	2,02	22 x 35
		83	59	2,04	25 x 30
		83	59	2,12	30 x 25
	6800	69	48	2,28	22 x 40
		69	48	2,31	25 x 35
	8200	57	40	2,67	22 x 50
		57	40	2,60	25 x 40
		57	40	2,56	30 x 30
		57	40	2,78	35 x 25
	10000	47	33	2,92	25 x 45
		47	33	2,92	30 x 35
	12000	39	28	3,26	25 x 50
		39	28	3,28	30 x 40
		39	28	3,20	35 x 30
	15000	31	22	3,74	30 x 45
		31	22	3,69	35 x 35
	18000	26	19	4,16	35 x 40
	22000	22	15	4,92	35 x 50
50 (63) 1H	1800	222	155	1,31	22 x 25
	2200	181	127	1,45	22 x 30
	2700	148	104	1,70	22 x 30
		148	104	1,70	25 x 25
	3300	121	85	1,98	22 x 35
		121	85	2,00	25 x 30
	3900	103	72	2,25	22 x 40
		103	72	2,28	25 x 35
		103	72	2,22	30 x 25
	4700	85	60	2,56	22 x 45
		85	60	2,58	30 x 30
		85	60	2,67	35 x 25
	5600	72	50	2,89	22 x 50
		72	50	2,81	25 x 40
		72	50	2,95	30 x 35
	6800	59	41	3,37	25 x 50
		59	41	3,39	30 x 40
		59	41	3,31	35 x 30

$U_{R.DC}$ (Surge Voltage) Code	Rated Capa-citance	Max ESR 20°C, 120Hz	Typ ESR 20°C, 120Hz	Max Ripple Current 105°C, 120Hz	Size Ø D x L
(V)	(µF)	(mΩ)	(mΩ)	(Arms)	(mm)
50 (63) 1H	8200	49	34	3,71	30 x 45
		49	34	3,66	35 x 35
	10000	40	28	4,09	30 x 50
		40	28	4,07	35 x 40
	12000	34	24	4,50	35 x 45
63 (79) 1J	1200	222	155	1,25	22 x 25
	1800	148	104	1,52	22 x 30
		148	104	1,52	25 x 25
	2200	121	85	1,73	22 x 35
		121	85	1,75	25 x 30
	2700	99	69	1,97	22 x 40
		99	69	1,99	25 x 35
		99	69	1,93	30 x 25
	3300	81	57	2,32	22 x 50
		81	57	2,27	25 x 40
		81	57	2,24	30 x 30
		81	57	2,41	35 x 25
	3900	68	48	2,54	25 x 45
		68	48	2,55	30 x 35
	4700	57	40	2,88	25 x 50
		57	40	2,90	30 x 40
		57	40	2,83	35 x 30
	5600	48	34	3,28	30 x 45
		48	34	3,24	35 x 35
	6800	40	28	3,73	30 x 50
		40	28	3,71	35 x 40
	8200	33	23	4,16	35 x 45
	10000	27	19	4,69	35 x 50
80 (100) 1K	820	324	227	1,11	22 x 25
	1000	266	186	1,25	22 x 25
	1200	222	155	1,39	22 x 30
		222	155	1,39	25 x 25
	1500	177	124	1,61	22 x 35
		177	124	1,62	25 x 30
	1800	148	104	1,83	22 x 40
		148	104	1,81	30 x 25
	2200	121	85	2,09	22 x 45
		121	85	2,01	25 x 35
		121	85	2,10	30 x 30
		121	85	2,17	35 x 25
	2700	99	69	2,43	25 x 45
		99	69	2,43	30 x 35
	3300	81	57	2,76	25 x 50
		81	57	2,78	30 x 40
		81	57	2,71	35 x 30
	3900	69	48	3,12	30 x 45
		69	48	3,07	35 x 35
	4700	57	40	3,56	30 x 50
		57	40	3,50	35 x 40
	5600	48	34	3,87	35 x 45
	6800	40	28	4,19	35 x 50
100 (125) 2A	560	474	332	1,07	22 x 25
	820	324	227	1,35	22 x 30
		324	227	1,35	25 x 25
	1000	266	186	1,54	22 x 35
		266	186	1,56	25 x 30
	1200	222	155	1,74	22 x 40
		222	155	1,76	25 x 35
		222	155	1,71	30 x 25
	1500	177	124	1,99	22 x 45
		177	124	2,03	25 x 40
		177	124	2,00	30 x 30
		177	124	2,07	35 x 25
	1800	148	104	2,28	25 x 45
		148	104	2,27	30 x 35
	2200	121	85	2,57	25 x 50
		121	85	2,59	30 x 40
		121	85	2,52	35 x 30
	2700	99	69	2,94	30 x 45
		99	69	2,90	35 x 35
	3300	81	57	3,32	30 x 50
		81	57	3,31	35 x 40
	3900	69	48	3,69	35 x 45
	4700	57	40	4,14	35 x 50
160 (200) 2C	330	603	423	1,16	22 x 25
	390	511	358	1,43	22 x 30
	470	424	297	1,52	22 x 35
		424	297	1,55	25 x 25
	560	356	249	1,62	22 x 40
		356	249	1,73	25 x 30

Customer specific products and adaptions on request.

Ratings for CD **294** BW Series

$U_{R.DC}$ (Surge Voltage) Code	Rated Capa-citance	Max ESR 20°C, 120Hz	Typ ESR 20°C, 120Hz	Max Ripple Current 105°C, 120Hz	Size Ø D x L
(V)	(µF)	(mΩ)	(mΩ)	(Arms)	(mm)
160 (200) 2C	680	293	205	1,70	22 x 45
		293	205	1,81	25 x 35
		293	205	1,82	30 x 25
	820	243	170	1,81	22 x 50
		243	170	1,98	25 x 40
		243	170	1,98	30 x 30
		243	170	1,93	35 x 25
	1000	199	140	2,04	25 x 45
		199	140	2,14	30 x 35
	1200	166	117	2,12	25 x 50
		166	117	2,22	30 x 40
		166	117	2,40	35 x 30
	1500	133	93	2,46	30 x 45
		133	93	2,53	35 x 35
	1800	111	78	2,98	35 x 45
	2200	91	64	3,10	35 x 50
180 (225) 2K	270	737	516	1,08	22 x 25
	330	603	423	1,30	22 x 30
	390	511	358	1,35	25 x 25
	470	424	297	1,50	22 x 35
		424	297	1,62	25 x 30
	560	356	249	1,62	22 x 40
		356	249	1,69	25 x 35
		356	249	1,67	30 x 25
	680	293	205	1,76	22 x 50
		293	205	1,72	25 x 40
		293	205	1,74	30 x 30
		293	205	1,92	35 x 25
	820	243	170	1,78	25 x 45
		243	170	1,85	30 x 35
	1000	199	140	1,91	25 x 50
		199	140	2,01	30 x 40
		199	140	2,16	35 x 30
	1200	166	117	2,19	30 x 45
		166	117	2,34	35 x 35
	1500	133	93	2,36	30 x 50
		133	93	2,56	35 x 40
	1800	111	78	2,67	35 x 45
200 (250) 2D	220	905	634	1,08	22 x 25
	270	737	516	1,20	22 x 30
	330	603	423	1,30	22 x 30
		603	423	1,35	25 x 25
	390	511	358	1,41	22 x 35
	470	424	297	1,50	22 x 40
		424	297	1,47	25 x 30
		424	297	1,56	30 x 25
	560	356	249	1,58	22 x 45
		356	249	1,65	25 x 35
	680	293	205	1,68	22 x 50
		293	205	1,80	25 x 40
		293	205	1,82	30 x 30
		293	205	1,96	35 x 25
	820	243	170	1,87	25 x 50
		243	170	1,99	30 x 35
		243	170	2,07	35 x 30
	1000	199	140	2,17	30 x 45
		199	140	2,22	35 x 35
	1200	166	117	2,22	30 x 50
		166	117	2,42	35 x 40
	1500	133	93	2,59	35 x 45
	1800	111	78	2,70	35 x 50
250 (300) 2E	180	1106	774	0,94	22 x 25
	220	905	634	1,10	22 x 30
		905	634	1,15	25 x 25
	270	737	516	1,13	22 x 35
	330	603	423	1,20	22 x 40
		603	423	1,30	25 x 30
		603	423	1,30	30 x 25
	390	511	358	1,26	22 x 45
		511	358	1,41	25 x 35
	470	424	297	1,37	22 x 50
		424	297	1,52	25 x 40
		424	297	1,36	30 x 30
		424	297	1,40	35 x 25
	560	356	249	1,59	25 x 45
		356	249	1,57	30 x 35
		356	249	1,56	35 x 30
	680	293	205	1,66	25 x 50
		293	205	1,76	30 x 40
	820	243	170	1,83	30 x 45
		243	170	1,82	35 x 35
	1000	199	140	1,87	30 x 50
		199	140	1,99	35 x 40
	1200	166	117	2,10	35 x 45

$U_{R.DC}$ (Surge Voltage) Code	Rated Capa-citance	Max ESR 20°C, 120Hz	Typ ESR 20°C, 120Hz	Max Ripple Current 105°C, 120Hz	Size Ø D x L
(V)	(µF)	(mΩ)	(mΩ)	(Arms)	(mm)
350 (400) 2V	68	2926	1610	0,56	22 x 25
	100	1990	1095	0,70	22 x 30
		1990	1095	0,70	25 x 25
	120	1658	912	0,73	22 x 35
	150	1327	730	0,79	22 x 40
		1327	730	0,82	25 x 30
		1327	730	0,82	30 x 25
	180	1106	608	0,81	22 x 45
		1106	608	0,89	25 x 35
		1106	608	0,90	30 x 30
	220	905	498	0,93	22 x 50
		905	498	0,97	25 x 40
		905	498	0,98	35 x 25
	270	737	406	1,01	25 x 50
		737	406	1,05	30 x 35
		737	406	1,01	35 x 30
	330	603	332	1,16	30 x 45
		603	332	1,16	35 x 35
	390	511	281	1,26	30 x 50
		511	281	1,26	35 x 40
	470	424	233	1,35	35 x 45
	560	356	196	1,51	35 x 50
400 (450) 2G	68	2926	1522	0,47	22 x 25
	82	2427	1262	0,56	22 x 30
		2427	1262	0,65	25 x 25
	100	1990	1035	0,60	22 x 30
	120	1658	863	0,64	22 x 35
		1658	863	0,70	25 x 30
		1658	863	0,78	30 x 25
	150	1327	690	0,70	22 x 40
		1327	690	0,73	25 x 35
	180	1106	575	0,78	22 x 50
		1106	575	0,82	25 x 40
		1106	575	0,83	30 x 30
		1106	575	0,86	35 x 25
	220	905	471	0,87	25 x 45
		905	471	0,86	30 x 35
	270	737	384	0,94	25 x 50
		737	384	0,95	30 x 40
		737	384	0,91	35 x 30
	330	603	314	1,11	30 x 45
		603	314	1,13	35 x 35
	390	511	266	1,15	30 x 50
		511	266	1,26	35 x 40
	470	424	221	1,31	35 x 45
	560	356	185	1,50	35 x 50
450 (500) 2W	56	4737	2369	0,47	22 x 25
	68	3903	1951	0,56	22 x 30
		3903	1951	0,65	25 x 25
	82	3236	1618	0,64	22 x 35
	100	2653	1327	0,70	22 x 40
		2653	1327	0,70	25 x 30
		2653	1327	0,78	30 x 25
	120	2211	1106	0,73	22 x 45
		2211	1106	0,73	25 x 35
	150	1769	885	0,78	22 x 50
		1769	885	0,82	25 x 40
		1769	885	0,83	30 x 30
		1769	885	0,86	35 x 25
	180	1474	737	0,87	25 x 45
		1474	737	0,86	30 x 35
	220	1206	603	0,94	25 x 50
		1206	603	0,95	30 x 40
		1206	603	0,91	35 x 30
	270	983	492	1,11	30 x 45
		983	492	1,13	35 x 35
	330	804	402	1,15	30 x 50
		804	402	1,26	35 x 40
	390	681	341	1,31	35 x 45
	470	565	283	1,50	35 x 50
500 (550) 2H	39	6802	3401	0,35	22 x 30
	47	5644	2822	0,41	22 x 35
	56	4737	2369	0,47	22 x 40
	68	3901	1951	0,54	22 x 45
	82	3235	1618	0,62	25 x 40
	100	2653	1327	0,67	25 x 45
	120	2211	1106	0,77	25 x 50
		2211	1106	0,72	35 x 30
	150	1769	885	0,85	30 x 40
	180	1474	737	1,01	30 x 50
	220	1206	603	1,12	35 x 45
	270	983	492	1,29	35 x 50

Customer specific products and adaptions on request.

Order Code **SMD, Radial, Snap-In**

EC	R	1C	PT	101	M	FF	25	0611	JExxxxx
Technology	Terminal Type	Rated Voltage Code	Series Code	Capacitance Code (in µF)	Capacitance Tolerance	Lead Form	Terminal/ Pitch Size	Size Ø D x L	for Specials only
EC = Electrolytic Capacitor	SMD = V	2,5V = 0E	CD **110** = PT	0,47 = R47	**±20% = M**	SMD:		4x7 = 0407	
	Radial = R	4V = 0G	CD **11GL** = GL	1,0 = 010	±10% = K	**Taped = FF**	Terminal = T2	5x11,5 = 0511	
PC = Polymer Capacitor	Snap-In = S	6,3V = 0J	CD **261** = LK	2,2 = 2R2	+20 / -0% = R	Radial:		6,3x11,5 = 0611	
		10V = 1A	CD **261X** = QX	10 = 100	+20 / -10% = V	**Taped = FF**	2,0mm = 20	35x80 = 3580	
		16V = 1C	CD **262** = QM	100 = 101	+30 / -10% = Q	**Long Lead = LL**	2,5mm = 25	45x100 = 45100	
		20V = 1D	CD **263** = BK	1000 = 102	+50 / -10% = T	Cut 5,0mm = CB	3,5mm = 35		
		25V = 1E	CD **269** = PH	10000 = 103		**Cut 4,5mm = CC**	5,0mm = 50		
		35V = 1V	CD **269L** = HL			Cut 4,0mm = CD	7,5mm = 75		
		40V = 1G	CD **281** = LL			Cut 3,5mm = CE	10,0mm = 10		
		50V = 1H	CD **281L** = LH			Cut 3,0mm = CF	12,5mm = 12		
		63V = 1J	CD **287** = GC			on request: alternative lead forms (Keyed Polarity, axial, 90° - angle, others)			
		80V = 1K	CD **28L** = QL			**Snap-In:**			
		100V = 2A	CD **293** = BZ			4,0mm Pin Length = T4	2 Pin = P2		
		160V = 2C	CD **294** = BW			**6,3mm Pin Length = T6**	3 Pin = P3		
		180V = 2K	CD **295** = BC			Soldering Pin = S4	4 Pin = P4		
		200V = 2D	CD **296** = KC				5 Pin = P5		
		250V = 2E	CD **297** = BB			**preferred**			
		315V = 2F	CD **299** = PG						
		350V = 2V	CD **29D** = HR						
		385V = 2J	CD **29H** = QH						
		400V = 2G	CD **29L** = QL						
		415V = 2P	**HVC** = VC						
		420V = 2X	**HVM** = VM						
		450V = 2W	**HCP/HCN** = CP/CN						
		500V = 2H	**HPN** = PN						
		550V = 2Y	**HPE/HEN** = PE/EN						

Technical Specification **Radial Type**

Dimensions for loose, long-lead type (bulk)
Order Code: LL

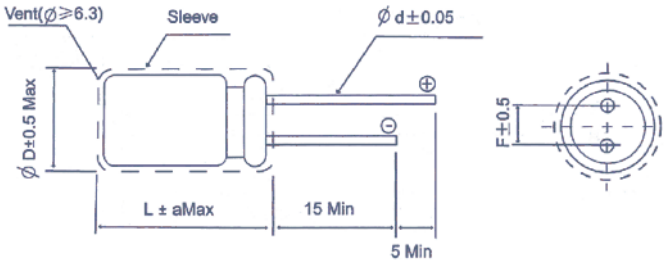

L	L ≤ 7					L ≥ 11									
Ø D	3	4	5	6,3	8	5	6,3	8	10	12,5	16	18	20	22	25
F	1	1,5	2,0	2,5	3,5	2,0	2,5	3,5	5,0		7,5		10,0		12,5
Ø d	0,4	0,45				0,5		0,6			0,8		1,0		
a_{Max}	1,0					2,0									

in mm

Dimensions for loose, short cut leads (bulk)
Order Code: CC (CB, CD, CE, CF)

Straight Lead						Bended Lead
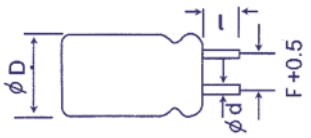						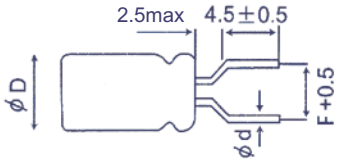
Code	CB	**CC**	CD	CE	CF	
l	5,0 ± 0,5	**4,5 ± 0,5**	4,0 ± 0,5	3,5 ± 0,5	3,0 ± 0,5	

preferred

in mm

Dimensions for Ammopack taping
Order Code: FF (FD)

Code	Case Range		Dimensions				Form
	Ø D	L (max)	H ± 0,75	Ho ± 0,5	F ± 0,5	P ± 0,1	
FF	4 ~ 5	13	18,5	17	2,5	12,7	B
	6,3	13	18,5	-	2,5	12,7	A
	8	13	18,5	-	3,5	12,7	
	4 ~ 8	7	17,5	16	5,0	12,7	B
	5 ~ 6,3	13	18,5				
	8	22	20,0				
	10	22	18,5	-			A
	12,5	27	18,5	-		15,0	
FD	12,5	27	18,5	-		25,4	C
FF	16 ~ 18	27	18,5	-	7,5	30,0	

Form A

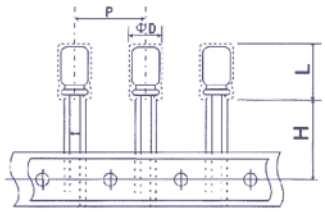

Form B

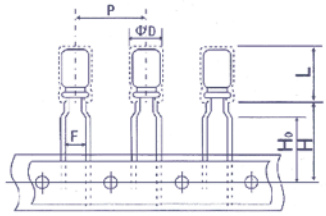

Form C

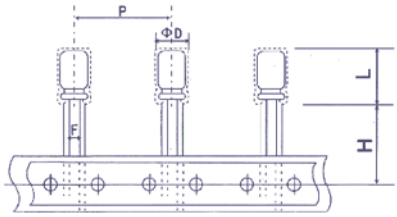

in mm

Technical Specification **Snap-In Type**

Pin Type: Snap-In Order Code: T6, T4

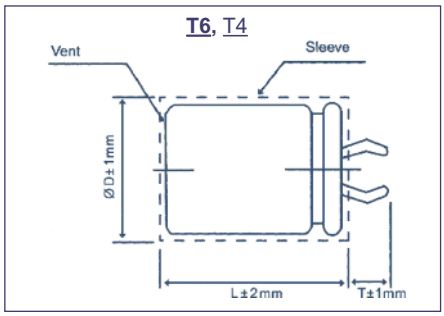

Terminal	T6	T4
Pin Length	6,3	4,0
	preferred	

Pin Type: Soldering Order Code: S4

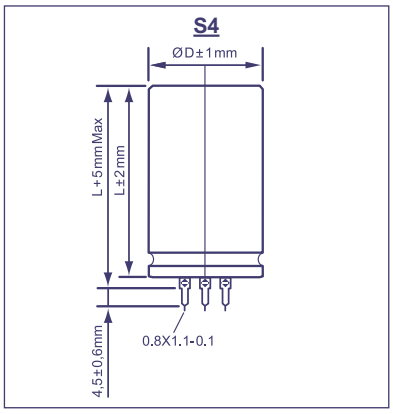

Snap-In Terminal Order Code: P2, P3, P4

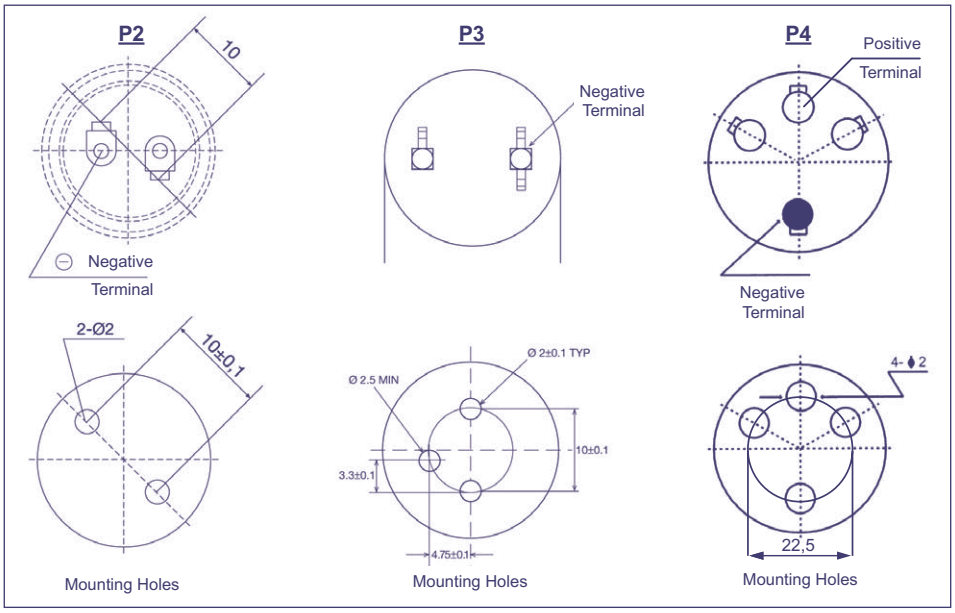

Soldering Terminal Order Code: P5

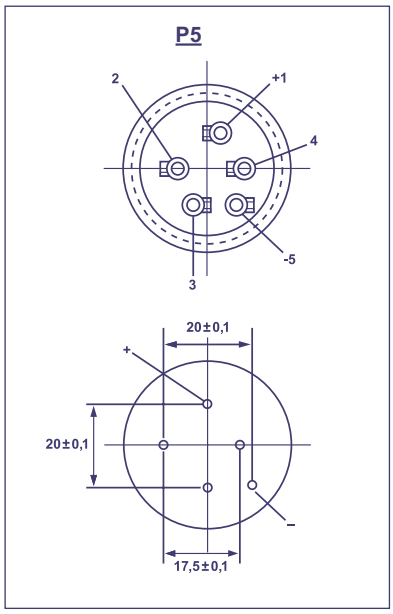

P3 only as T4 Terminal available, P4 for Ø D ≥ 30mm, P5 for Ø D ≥ 40mm