Air Cylinder

ø 20, ø 25, ø 32, ø 40, ø 50, ø 63, ø 80, ø 100

New

RoHS

Female rod end available as standard

Rod end styles suitable for the application can be selected.

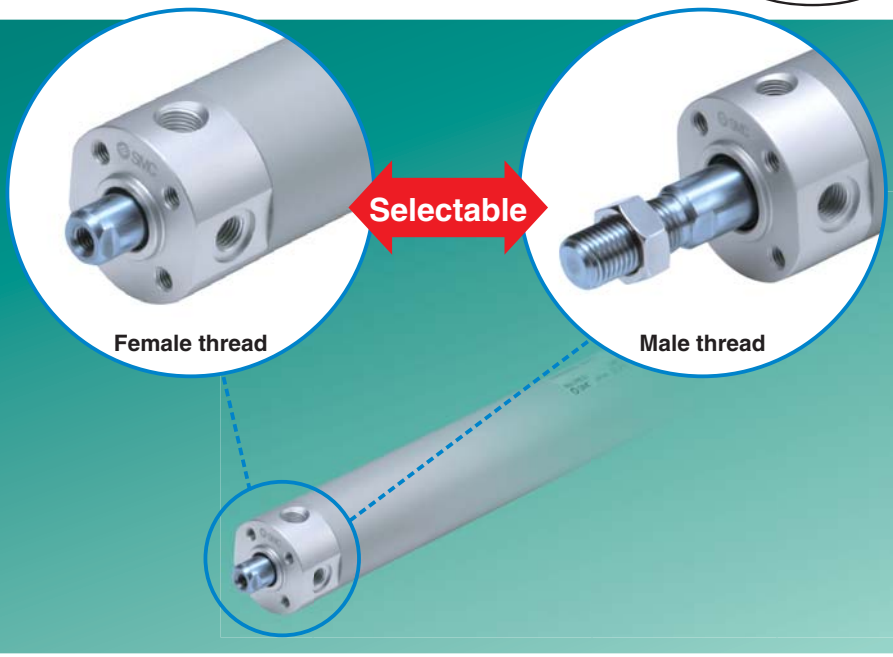

Easy fine adjustment of auto switch position

Fine adjustment of the auto switch position is possible by simply loosening the screw attached to the auto switch.

Transparent switch bracket improves visibility of indicator LED.

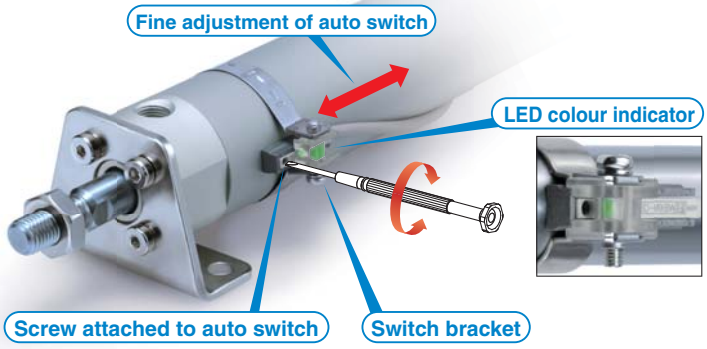

No trunnion mounting female thread added to basic type variation

No foreign matter accumulation due to the simple construction

New Direct mount, non-rotating rod type (CG1KR-Z) is added.

The models with rod end bracket and/or pivot bracket part numbers are expanded.

- CG1-Z (Single acting), CG1K-Z, CG1R-Z, CG1KR-Z, CG1Y-Z

Series CG1

SMC

CAT.EUS20-224C-UK

Part numbers with rod end bracket and/or pivot bracket available

Not necessary to order a bracket for the applicable cylinder separately

Note) Mounting bracket is shipped together with the product, but not assembled.

Example) CDG1 D N20-50Z- N W -M9BW

• Mounting

Pivot bracket	
—	None
N	Pivot bracket is shipped together with the product, but not assembled.

∗ Applicable to only mounting D, U and T.

N: Kit of pivot bracket and clevis

Kit of pivot bracket and trunnion

Rod end bracket	
—	None
V	Single knuckle joint
W	Double knuckle joint

With rod end bracket

V: Single knuckle joint

W: Double knuckle joint

Various mounting bracket options

- Suitable mounting brackets can be selected for the installation condition.
- Improved amount of mounting freedom

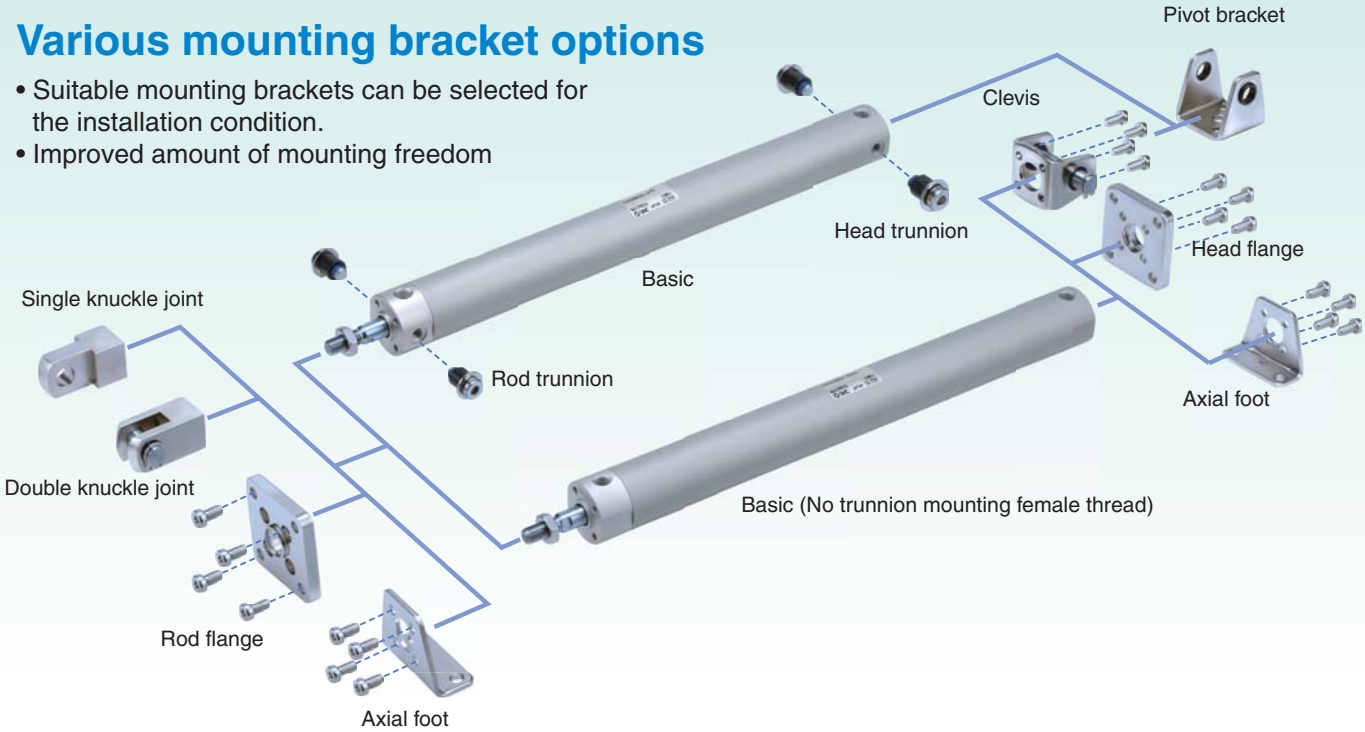

Easy fine adjustment of auto switch position

Fine adjustment of the auto switch set position can be performed by loosening the auto switch attached screw without loosening the auto switch mounting band. Operability improved compared with the conventional auto switch set position adjustment, where the complete switch mounting band requires loosening.

Visibility of the indicator LED improved with the transparent resin switch bracket (Standard specification)

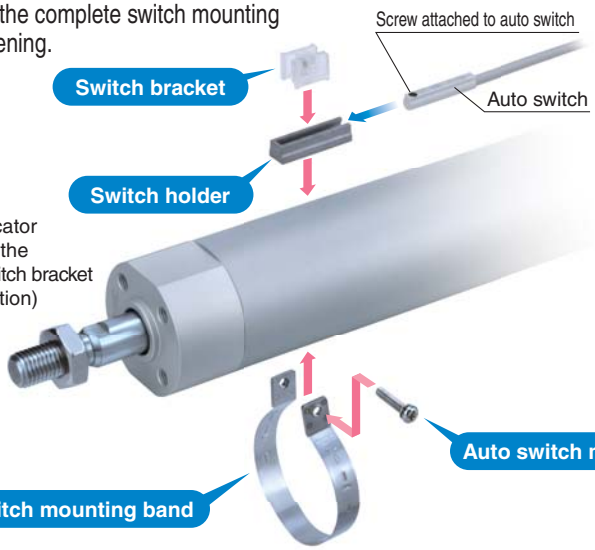

No environmental hazardous substances used

Compliant with EU RoHS directive.
Lead free bushing is used as sliding material.

Specifications, performance and mounting method are same as the existing product.

Grease is selectable. (Option)

- **Grease for food processing equipment (XC85)**
- **PTFE grease (X446)**

Water resistant compact auto switch now available

- **Solid state auto switch D-M9□A(V)**

Stroke Variations

[mm]

Bore size [mm]	Standard stroke								
	25	50	75	100	125	150	200	250	300
20	●	●	●	●	●	●	●		
25	●	●	●	●	●	●	●	●	●
32	●	●	●	●	●	●	●	●	●
40	●	●	●	●	●	●	●	●	●
50	●	●	●	●	●	●	●	●	●
63	●	●	●	●	●	●	●	●	●
80	●	●	●	●	●	●	●	●	●
100	●	●	●	●	●	●	●	●	●

Series Variations

Series	Action	Type	Cushion	Bore size [mm]								Variations			Page
				20	25	32	40	50	63	80	100	With rod boot	Air-hydro	Clean series	
Standard CG1-Z 	Double acting	Single rod	Rubber bumper	●	●	●	●	●	●	●	●	●	●	●	Page 5
			Air cushion	●	●	●	●	●	●	●	●	●			
	Double acting	Double rod	Rubber bumper	●	●	●	●	●	●	●	●	●	●	●	Page 23
			Air cushion	●	●	●	●	●	●	●	●	●			
	Single acting	Single rod (Spring return /extend)	Rubber bumper	●	●	●	●								Page 31
Non-rotating rod CG1K-Z 	Double acting	Single rod	Rubber bumper	●	●	●	●	●	●						Page 38
			Air cushion				●	●	●						
	Double acting	Double rod	Rubber bumper	●	●	●	●	●	●						Page 43
Direct mount CG1R-Z 	Double acting	Single rod	Rubber bumper	●	●	●	●	●	●						Page 47
			Air cushion	●	●	●	●	●	●						
Direct mount, Non-rotating rod CG1KR-Z 	Double acting	Single rod	Rubber bumper	●	●	●	●	●	●						Page 52
With end lock CBG1 	Double acting	Single rod	Rubber bumper	●	●	●	●	●	●	●	●	●			Page 56
			Air cushion	●	●	●	●	●	●	●	●	●			
Smooth Cylinder CG1Y-Z 	Double acting	Single rod	Rubber bumper	●	●	●	●	●	●	●	●				Digital Catalogue www.smc.eu
Series CG3															
Short type Standard CG3 	Double acting	Single rod	Rubber bumper	●	●	●	●	●	●	●	●				

Combinations of Standard Products and Made to Order Specifications

Series CG1

● : Standard
◎ : Made to Order
○ : Special product (Please contact SMC for details.)
— : Not available

Series			CG1 (Standard type)					CG1K (Non-rotating rod type)		
Action/Type			Double acting				Single acting	Double acting		
			Single rod		Double rod		Single rod	Single rod		Double rod
Cushion			Rubber	Air	Rubber	Air	Rubber	Rubber	Air	Rubber
Page			Page 5		Page 23		Page 31	Page 38		Page 43
Symbol	**Specifications**	Applicable bore size	ø 20 to ø 100				ø 20 to ø 40	ø 20 to ø 63	ø 40 to ø 63	ø 20 to ø 63
Standard	**Standard**	ø 20 to ø 100	●	●	●	●	●	●	●	●
Long st	**Long stroke**		●	●	●	●	○	● Note 10)	● Note 10)	● Note 10)
D	**Built-in magnet**		●	●	●	●	●	●	●	●
CG1□F	**With One-touch fittings** Note 15)	ø 20 to ø 63	●	○	○	○	○	○	○	○
CG1□-□J/K	**With rod boot**	ø 20 to ø 100	● Note 11)	● Note 11)	● Note 11)	● Note 11)	○	○	○	○
CG1□H	**Air-hydro type**	ø 20 to ø 63	●	—	●	—	—	—	—	—
10-	**Clean series**	ø 20 to ø 100	●	● Note 1)	●	● Note 1)	○	—	—	—
25A- Note 9)	**Copper (Cu) and Zinc (Zn)-free** Note 15)	ø 20 to ø 100	●	●	○	○	○	○	○	○
20- Note 9)	**Copper** Note 8) **and Fluorine-free**	ø 20 to ø 100	●	●	●	●	○	●	○	●
CG1□R/V	**Water resistant**	ø 32 to ø 100	●	●	○	○	○	—	—	—
CG1□M	**Cylinder with stable lubrication function (Lube-retainer)**	ø 20 to ø 100	●	○	○	○	—	—	—	—
XB6	**Heat resistant cylinder (–10 to 150 °C)** Note 7)	ø 20 to ø 100	◎ Note 2)	◎	◎ Note 2)	◎	○	—	—	—
XB7	**Cold resistant cylinder (–40 to 70 °C)** Note 7)		◎ Note 2)	○	◎ Note 2) Note 5)	○	○	—	—	—
XB9	**Low speed cylinder (10 to 50 mm/s)**		◎	○	○	○	—	—	—	—
XB13	**Low speed cylinder (5 to 50 mm/s)**		◎	○	○	○	—	—	—	—
XC4	**With heavy duty scraper**	ø 32 to ø 63	◎	◎	○	○	○	—	—	—
XC6	**Made of stainless steel**	ø 20 to ø 100	◎	◎	◎	◎	◎ Note 6)	—	—	—
XC8	**Adjustable stroke cylinder/Adjustable extension type**	ø 20 to ø 63	◎	◎	—	—	○	◎	○	—
XC9	**Adjustable stroke cylinder/Adjustable retraction type**		◎	◎	—	—	○	◎	○	—
XC10	**Dual stroke cylinder/Double rod type**		◎	◎	—	—	○	◎	◎	—
XC11	**Dual stroke cylinder/Single rod type**		◎	◎	—	—	—	◎	○	—
XC12	**Tandem cylinder**		◎	○	—	—	—	◎ Note 15)	○	○
XC13	**Auto switch rail mounting**	ø 20 to ø 100	◎	◎	◎	◎	○	◎	○	○
XC20	**Head cover axial port**	ø 20 to ø 63	◎	○	—	—	◎	◎	○	—
XC22	**Fluororubber seal**	ø 20 to ø 100	◎ Note 2)	◎	◎ Note 2)	◎	○	○	○	○
XC27	**Double clevis and double knuckle joint pins made of stainless steel**		◎	◎	○	○	◎	◎	◎	○
XC29	**Double knuckle joint with spring pin**		◎	◎	○	○	◎ Note 6)	○	○	○
XC35	**With coil scraper**	ø 20 to ø 63	◎	◎	○	○	○	—	—	—
XC37	**Larger throttle diameter of connection port**		◎	◎	◎	◎	○	○	○	○
XC42	**Built-in shock absorber in head cover side**		◎	◎	—	—	○	○	○	—
XC85	**Grease for food processing equipment**	ø 20 to ø 100	◎	◎	◎	◎	◎	○	○	○
X446	**PTFE grease**	ø 20 to ø 100	◎	○	○	○	○	—	—	—

Note 1) ø 40 to ø 63 only
Note 2) Without bumper
Note 3) ø 32 to ø 100 only
Note 4) SV type only (Heat resistant grease is used.)
Note 5) ø 20 to ø 63 only
Note 6) Single acting/spring return type (S) only
Note 7) The products with an auto switch are not compatible.

	CG1R (Direct mount type)		CG1KR (Direct mount, Non-rotating rod type)	CBG1 Note 15) (With end lock)		CG1□Y Note 12) (Smooth Cylinder)	
	Double acting		Double acting	Double acting		Double acting	
	Single rod		Single rod	Single rod		Single rod	
	Rubber	Air	Rubber	Rubber	Air	—	
	Page 47		Page 52	Page 56		—	
	ø 20 to ø 63		ø 20 to ø 63	ø 20 to ø 100		ø 20 to ø 100	Symbol
	●	●	●	●	●	●	Standard
	○	○	○	●	●	● Note 10)	Long st
	●	●	●	●	●	●	D
	○	○	○	○	○	○	CG1□F
	○	○	○	●	●	○	CG1□-□J/K
	○	—	—	—	—	—	CG1□H
	●	○	—	○	○	—	10-
	○	○	○	○	○	○	25A- Note 9)
	●	●	○	○	○	—	20- Note 9)
	○	○	—	○	○	—	CG1□R/V
	○	○	—	—	—	—	CG1□M
	◎ Note 2)	◎	—	○	○	—	XB6
	◎ Note 2) Note 15)	○	—	—	—	—	XB7
	◎ Note 15)	○	—	○	○	—	XB9
	◎ Note 15)	○	—	—	—	—	XB13
	○	○	—	○	○	—	XC4
	◎	◎	—	○	○	◎	XC6
	◎	○	◎ Note 15)	○ Note 13)	○ Note 13)	○	XC8
	◎	○	◎ Note 15)	○ Note 14)	○ Note 14)	○	XC9
	○	○	○	○	○	○	XC10
	○	○	○	○	○	○	XC11
	○	○	○	○	○	—	XC12
	◎	○	○	◎	◎	○	XC13
	◎	○	◎ Note 15)	○	○	◎	XC20
	◎ Note 2)	○	○	○	○	—	XC22
	○	○	○	○	○	◎	XC27
	○	○	○	○	○	○	XC29
	○	○	—	○	○	—	XC35
	○	○	○	○	○	○	XC37
	○	○	○	○	○	—	XC42
	◎	◎	○	○	○	—	XC85
	○	○	—	—	—	—	X446

Note 8) Copper-free for the externally exposed part
Note 9) For details, refer to **www.smc.eu**.
Note 10) Long stroke is beyond the performance guarantee.
Note 11) Female rod end is available as a special order.
Note 12) For details about the smooth cylinder, refer to **www.smc.eu**.
Note 13) Available only for locking at head end.
Note 14) Available only for locking at rod end.
Note 15) The shape is the same as the existing product.

Air Cylinder: Standard Type
Double Acting, Single Rod

Series CG1

RoHS

ø 20, ø 25, ø 32, ø 40, ø 50, ø 63, ø 80, ø 100

How to Order

CG1 B N 20 □ – 100 □ □ Z – □ □ – □

With auto switch: CDG1 B N 20 □ – 100 □ □ Z – □ □ – M9BW □ – □

With auto switch
(Built-in magnet)

Mounting

B	Basic
Z*	Basic (without trunnion mounting female thread)
L	Axial foot
F	Rod flange
G	Head flange
U*	Rod trunnion
T*	Head trunnion
D	Clevis

∗ Not available for ø 80 and ø 100.
∗ Mounting bracket is shipped together with the product, but not assembled.
∗ The cylinder for F, G, L, D mounting types is Z: Basic (without trunnion mounting female thread).

Bore size

20	20 mm
25	25 mm
32	32 mm
40	40 mm
50	50 mm
63	63 mm
80	80 mm
100	100 mm

Type

N	Rubber bumper
A	Air cushion

Port thread type

Rubber bumper			Air cushion	
—	Rc	ø 20 to ø 100	M5 x 0.8	ø 20, ø 25
			Rc	ø 32 to ø 100
TN	NPT	ø 20 to ø 100	NPT*	ø 32 to ø 100
TF	M5 x 0.8	ø 20, ø 25	G*	ø 32 to ø 100
	G	ø 32 to ø 100		

∗ Not available for ø 20 and ø 25.

Cylinder stroke [mm]
Refer to "Standard Strokes" on page 6.

Rod end thread

—	Male rod end
F	Female rod end

Pivot bracket

—	None
N	Pivot bracket is shipped together with the product, but not assembled

∗ Only for D, U, T mounting types
∗ Pivot bracket is shipped together with the product, but not assembled.

Rod end bracket

—	None
V	Single knuckle joint
W	Double knuckle joint

∗ No bracket is provided for the female rod end.
∗ Rod end bracket is shipped together with the product, but not assembled.
∗ A knuckle joint pin is not provided with the single knuckle joint.

Suffix for cylinder (Rod boot)

—	Without rod boot
J	Nylon tarpaulin
K	Heat resistant tarpaulin

∗ In the case of w/rod boot, and a foot bracket or rod flange as a bracket, those parts are to be assembled at the time of shipment.
∗ For female rod end, no rod boot is provided.

Made to Order
For details, refer to page 6.

Number of auto switches

—	2 pcs.
S	1 pc.
n	"n" pcs.

Auto switch

—	Without auto switch

∗ For applicable auto switches, refer to the table below.

Applicable Auto Switches/Refer to the **Auto Switch Guide** for further information on auto switches.

Type	Special function	Electrical entry	Indicator light	Wiring (Output)	Load voltage DC		Load voltage AC	Auto switch model / Applicable bore size: ø 20 to ø 63 Perpendicular	ø 20 to ø 63 In-line	ø 80, ø 100 In-line	Lead wire length [m] 0.5 (—)	1 (M)	3 (L)	5 (Z)	None (N)	Pre-wired connector	Applicable load	
Solid state auto switch	——	Grommet	Yes	3-wire (NPN)	24 V	5 V, 12 V	—	M9NV	M9N	—	●	●	●	○	—	○	IC circuit	Relay, PLC
								—	—	G59	●	—	●	○	—	○		
				3-wire (PNP)				M9PV	M9P	—	●	●	●	○	—	○		
								—	—	G5P	●	—	●	○	—	○		
				2-wire		12 V		M9BV	M9B	—	●	●	●	○	—	○	—	
								—	—	K59	●	—	●	○	—	○		
		Connector						—	H7C	—	●	—	●	●	●	—		
	Diagnostic indication (2-colour indication)	Grommet		3-wire (NPN)		5 V, 12 V		M9NWV	M9NW	—	●	●	●	○	—	○	IC circuit	
								—	—	G59W	●	—	●	○	—	○		
				3-wire (PNP)				M9PWV	M9PW	—	●	●	●	○	—	○		
								—	—	G5PW	●	—	●	○	—	○		
				2-wire		12 V		M9BWV	M9BW	—	●	●	●	○	—	○	—	
								—	—	K59W	●	—	●	○	—	○		
	Water resistant (2-colour indication)			3-wire (NPN)		5 V, 12 V		M9NAV***	M9NA***	—	○	○	●	○	—	○	IC circuit	
				3-wire (PNP)				M9PAV***	M9PA***	—	○	○	●	○	—	○		
				2-wire		12 V		M9BAV***	M9BA***	—	○	○	●	○	—	○	—	
								—	—	G5BA***	—	—	●	○	—	○		
	With diagnostic output (2-colour indication)			4-wire (NPN)		5 V, 12 V		—	H7NF	G59F	●	—	●	○	—	○	IC circuit	
Reed auto switch	——	Grommet	Yes	3-wire (Equiv. to NPN)	—	5 V	—	A96V	A96	—	●	—	●	—	—	—	IC circuit	—
			No	2-wire	24 V	12 V	100 V	A93V	A93	—	●	—	●	●	—	—	—	Relay, PLC
							100 V or less	A90V	A90	—	●	—	●	—	—	—	IC circuit	
			Yes				100 V, 200 V	—	B54		●	—	●	●	—	—	—	
			No				200 V or less	—	B64		●	—	●	—	—	—		
		Connector	Yes				—	—	C73C	—	●	—	●	●	●	—		
			No				24 V or less	—	C80C	—	●	—	●	●	●	—	IC circuit	
	Diagnostic indication (2-colour indication)	Grommet	Yes			—	—	—	B59W		●	—	●	—	—	—	—	

∗∗∗ Water resistant type auto switches can be mounted on the above models, but in such case SMC cannot guarantee water resistance.
A water-resistant type cylinder is recommended for use in an environment which requires water resistance. However, please contact SMC for water-resistant cylinder of ø 20 and ø 25.

∗ Lead wire length symbols: 0.5 m····· — (Example) M9NW
1 m····· M (Example) M9NWM
3 m····· L (Example) M9NWL
5 m····· Z (Example) M9NWZ
None····· N (Example) H7CN

∗ Solid state auto switches marked with "○" are produced upon receipt of order.

∗ Since there are other applicable auto switches than listed above, refer to page 74 for details.
∗ For details about auto switches with pre-wired connector, refer to **Auto Switch Guide.**
∗ The D-A9□□/M9□□□ auto switches are shipped together, (but not assembled). (However, only the auto switch mounting brackets are assembled before shipment.)

Symbol

Rubber bumper

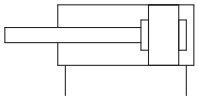

Air cushion

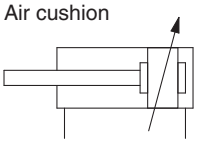

Made to Order
(For details, refer to pages 77 to 93.)

Symbol	Specifications
-XA□	Change of rod end shape
-XB6	Heat resistant cylinder (–10 to 150 °C)*1
-XB7	Cold resistant cylinder (–40 to 70 °C)*2
-XB9	Low speed cylinder (10 to 50 mm/s)*3
-XB13	Low speed cylinder (5 to 50 mm/s)*3
-XC4	With heavy duty scraper
-XC6	Made of stainless steel
-XC8	Adjustable stroke cylinder/Adjustable extension type
-XC9	Adjustable stroke cylinder/Adjustable retraction type
-XC10	Dual stroke cylinder/Double rod type
-XC11	Dual stroke cylinder/Single rod type
-XC12	Tandem cylinder*3
-XC13	Auto switch rail mounting
-XC20	Head cover axial port*3
-XC22	Fluororubber seal*1
-XC27	Double clevis and double knuckle joint pins made of stainless steel
-XC29	Double knuckle joint with spring pin
-XC35	With coil scraper
-XC37	Larger throttle diameter of connection port
-XC42	Built-in shock absorber in head cover side
-XC85	Grease for food processing equipment
-X446	PTFE grease*3

*1 Cylinders with rubber bumper have no bumper.
*2 Only compatible with cylinders with rubber bumper, but has no bumper.
*3 Only compatible with cylinders with rubber bumper.

Refer to pages 68 to 74 for cylinders with auto switches.

- Auto switch proper mounting position (detection at stroke end) and its mounting height
- Minimum stroke for auto switch mounting
- Auto switch mounting brackets/Part no.
- Operating range
- Cylinder mounting bracket, by stroke/Auto switch mounting surfaces

Specifications

Bore size [mm]			20	25	32	40	50	63	80	100
Action			Double acting, Single rod							
Lubricant			Not required (Non-lube)							
Fluid			Air							
Proof pressure			1.5 MPa							
Maximum operating pressure			1.0 MPa							
Minimum operating pressure			0.05 MPa							
Ambient and fluid temperature			Without auto switch: –10 °C to 70 °C With auto switch : –10 °C to 60 °C (No freezing)							
Piston speed			50 to 1000 mm/s						50 to 700 mm/s	
Stroke length tolerance			Up to 1000 st $^{+1.4}_{0}$ mm, Up to 1500 st $^{+1.8}_{0}$ mm							
Cushion			Rubber bumper, Air cushion							
Mounting**			Basic, Basic (without trunnion mounting female thread), Axial foot, Rod flange, Head flange, Rod trunnion, Head trunnion, Clevis (used for changing the port location by 90°)							
Allowable kinetic energy (J)	**Rubber bumper**	**Male rod end**	0.28	0.41	0.66	1.20	2.00	3.40	5.90	9.90
		Female rod end	0.11	0.18	0.29	0.52	0.91	1.54	2.71	4.54
	Air cushion	**Male rod end**	R: 0.35 H: 0.42	R: 0.56 H: 0.65	0.91	1.80	3.40	4.90	11.80	16.70
		Female rod end	0.11	0.18	0.29	0.52	0.91	1.54	2.71	4.54

* R: Rod side, H: Head side
** Cylinder sizes ø 80 and ø 100 do not have basic (without trunnion mounting female thread), rod trunnion and head trunnion types. Foot, flange and clevis types of cylinder sizes from ø 20 to ø 63 do not have trunnion mounting female thread. Operate the cylinder within the allowable kinetic energy.

Accessories

Mounting		Basic	Axial foot	Rod flange	Head flange	Rod trunnion	Head trunnion	Clevis
Standard	Rod end nut	●	●	●	●	●	●	●
	Clevis pin	—	—	—	—	—	—	●
Option	Single knuckle joint	●	●	●	●	●	●	●
	Double knuckle joint (with pin)**	●	●	●	●	●	●	●
	Pivot bracket*	—	—	—	—	●*	●*	●
	Rod boot	●	●	●	●	●	●	●

* Not available for ø 80 and ø 100.
** A double knuckle joint pin and retaining rings are shipped together.

Standard Strokes

[mm]

Bore size	Standard stroke Note1)	Maximum manufacturable stroke Note 2)
20	25, 50, 75, 100, 125, 150, 200	201 to 1500
25	25, 50, 75, 100, 125, 150, 200, 250, 300	301 to 1500
32		
40		
50, 63		
80		
100		

Note 1) Intermediate strokes not listed above are produced upon receipt of order. Manufacture of intermediate strokes at 1 mm intervals is possible. (Spacers are not used.)
Note 2) The maximum manufacturable stroke shows the long stroke.
Note 3) Applicable strokes should be confirmed according to the usage. For details, refer to "Air Cylinders Model Selection". In addition, the products that exceed the standard stroke might not be able to fulfill the specifications due to the deflection etc.

Ordering Example of Cylinder Assembly

Cylinder model: CDG1DN20-100Z-NW-M9BW

Mounting **D: Clevis**
Pivot bracket **N: Yes**
Rod end bracket **W: Double knuckle joint**
Auto switch D-M9BW: 2 pcs.

∗Pivot bracket, double knuckle joint and auto switch are shipped together with the product, but not assembled.

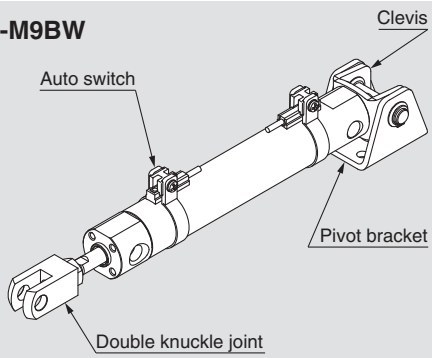

Rod Boot Material

Symbol	Rod boot material	Maximum operating temperature
J	Nylon tarpaulin	70 °C
K	Heat resistant tarpaulin	110 °C∗

∗ Maximum ambient temperature for the rod boot itself.

Mounting Brackets/Part No.

Mounting bracket	Order q'ty	Bore size [mm]								Contents
		20	25	32	40	50	63	80	100	
Axial foot	2 Note 1)	CG-L020	CG-L025	CG-L032	CG-L040	CG-L050	CG-L063	CG-L080	CG-L100	2 foots, 8 mounting bolts
Flange	1	CG-F020	CG-F025	CG-F032	CG-F040	CG-F050	CG-F063	CG-F080	CG-F100	1 flange, 4 mounting bolts
Trunnion pin	1	CG-T020	CG-T025	CG-T032	CG-T040	CG-T050	CG-T063	—	—	2 trunnion pins, 2 trunnion bolts, 2 flat washers
Clevis	1	CG-D020	CG-D025	CG-D032	CG-D040	CG-D050	CG-D063	CG-D080	CG-D100	1 clevis, 4 mounting bolts, 1 clevis pin, 2 retaining rings
Pivot bracket Note 2)	1	CG-020-24A	CG-025-24A	CG-032-24A	CG-040-24A	CG-050-24A	CG-063-24A	CG-080-24A	CG-100-24A	1 pivot bracket

Note 1) Order two foots per cylinder.
Note 2) Can be combined with the trunnion pin and the clevis.

Mounting Brackets, Accessories/Material, Surface Treatment

Segment	Description		Material	Surface treatment
Mounting brackets	Foot		Carbon steel	Nickel plating
	Flange		Carbon steel (ø 20 to ø 63)	Nickel plating
			Cast iron (ø 80, ø 100)	Nickel plating
	Clevis		Carbon steel (ø 20 to ø 63)	Nickel plating
			Cast iron (ø 80, ø 100)	Nickel plating
	Trunnion pin	Trunnion pin	Carbon steel	Salt-bath nitrocarburising
		Trunnion bolt	Carbon steel	Nickel plating
		Flat washer	Carbon steel	Nickel plating
Accessories	Rod end nut		Carbon steel	Zinc chromated
	Single knuckle joint		Carbon steel (ø 20 to ø 32)	Nickel plating
			Cast iron (ø 40 to ø 100)	Zinc chromated
	Double knuckle joint		Carbon steel (ø 20 to ø 32)	Nickel plating
			Cast iron (ø 40 to ø 100)	Zinc chromated
	Knuckle pin		Carbon steel	—
	Clevis pin		Carbon steel	—
	Pivot bracket		Carbon steel (ø 20 to ø 63)	Nickel plating
			Cast iron (ø 80, ø 100)	Nickel plating
	Mounting bolt		Carbon steel	Nickel plating
	Retaining ring		Carbon tool steel	Phosphate coating

Mounting Procedure

Mounting procedure for trunnion

Follow the procedures below when mounting a pivot bracket on the trunnion.

ø 20 to ø 63

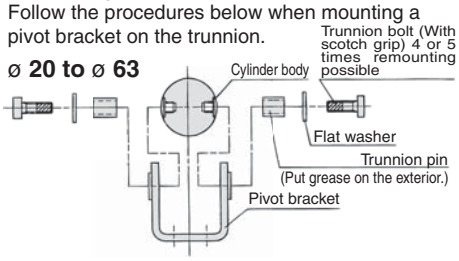

Mounting procedure for clevis

Follow the procedures below when mounting a pivot bracket on the clevis.

ø 20 to ø 63

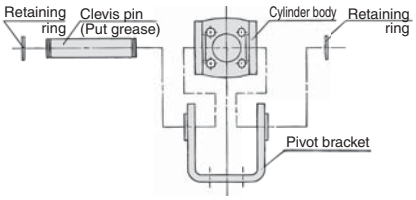

ø 80, ø 100

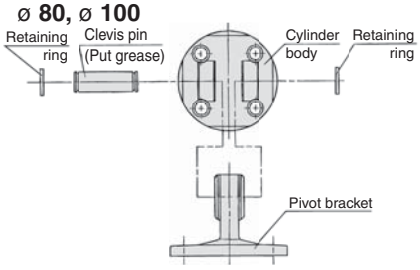

Weights

[kg]

Bore size [mm]		20	25	32	40	50	63	80	100
Basic weight	Basic (B)	0.11	0.17	0.24	0.44	0.79	1.06	2.07	3.16
	Basic (Z)	0.11	0.17	0.25	0.45	0.80	1.09	—	—
	Axial foot	0.21	0.29	0.40	0.67	1.26	1.77	3.04	4.91
	Flange	0.18	0.26	0.38	0.65	1.16	1.64	2.78	4.44
	Trunnion	0.12	0.19	0.28	0.49	0.88	1.20	—	—
	Clevis	0.17	0.25	0.39	0.68	1.19	1.78	2.77	4.44
Pivot bracket		0.08	0.09	0.17	0.25	0.44	0.80	0.98	1.75
Single knuckle joint		0.05	0.09	0.09	0.10	0.22	0.22	0.39	0.57
Double knuckle joint (with pin)		0.05	0.09	0.09	0.13	0.26	0.26	0.64	1.31
Additional weight per 50 mm of stroke		0.05	0.07	0.09	0.14	0.21	0.25	0.35	0.50
Additional weight for switch magnet		0.01	0.01	0.01	0.01	0.01	0.02	0.02	0.04
Additional weight with air cushion		0	0.01	0.04	0	0.01	0.04	0	0.04
Weight reduction for female rod end		−0.01	−0.02	−0.02	−0.05	−0.10	−0.10	−0.19	−0.27
Additional weight for long stroke		0.01	0.01	0.02	0.03	0.06	0.12	0.21	0.31

Calculation (Example) **CDG1FN20-100Z**
(Built-in magnet, Flange, ø 20, 100 stroke)

- Basic weight ····· 0.18 kg (Flange, ø 20)
- Additional weight for stroke ····· 0.05 kg/50 mm
- Air cylinder stroke ····· 100 mm
- Additional weight for switch magnet ····· 0.01 kg

0.18 + 0.05 x (100 / 50) + 0.01 = **0.29 kg**

Built-in One-touch Fittings (The shape is the same as the existing product.)

CG1 [Mounting style] N [Bore size] F – [Stroke]

Built-in One-touch fittings

This type has the One-touch fittings integrated in a cylinder, which enables to reduce the piping labor and installing space dramatically.

Dimensions (Dimensions other than those shown below are the same as the standard type.)

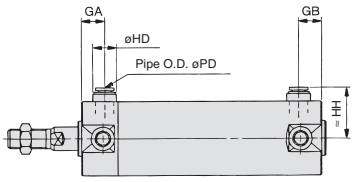

Bore size [mm]	GA	GB	HD	HH	PD
20	12	12	13	24.2	6
25	12	10 (12)	13	26.7	6
32	12	10 (12)	13	30.2	6
40	12	10 (12)	16	34.6	8
50	13	13	20	40.6	10
63	13	13	20	47.1	10

Note) ( ): Long stroke

Specifications

Bore size [mm]	20, 25, 32, 40, 50, 63
Action	Double acting
Fluid	Air
Maximum operating pressure	1.0 MPa
Minimum operating pressure	0.05 MPa
Piston speed	50 to 750 mm/s
Cushion	Rubber bumper
Mounting	Basic, Axial foot, Rod flange, Head flange, Rod trunnion, Head trunnion, Clevis (used for changing the port location by 90°)

∗ Auto switch can be mounted.
∗ Female rod end is not available.
∗ Use the existing seal kit.

Applicable Tubing O.D./I.D.

Bore size [mm]	20	25	32	40	50	63
Applicable tubing O.D. [mm]	6 / 4	6 / 4	6 / 4	8 / 6	10 / 7.5	10 / 7.5
Applicable tubing material	Can be used for either nylon, soft nylon or polyurethane tubing.					

Clean Series

10-CG1 [Mounting style] [Type (Cushion)] [Bore size] – [Stroke] Z

Clean Series (With relief port)

The type which is applicable for using inside the clean room graded Class 100 by making an actuator's rod section a double seal construction and discharging by relief port directly to the outside of clean room.

Specifications

Bore size [mm]	20, 25, 32, 40, 50, 63, 80, 100
Action	Double acting
Fluid	Air
Maximum operating pressure	1.0 MPa
Minimum operating pressure	0.05 MPa
Cushion	Rubber bumper, Air cushion
Piston speed	30 to 400 mm/s
Relief port size	M5 x 0.8
Mounting	Basic, Axial foot, Rod flange, Head flange∗∗

∗ Auto switch can be mounted.
∗∗ The basic type is B type only. However, no trunnion mounting female thread is provided.

Air-hydro

CG1 [Mounting style] **H** [Bore size] – [Stroke] **Z** – [Pivot bracket] [Rod end bracket]

H – Air-hydro

Low pressure hydraulic cylinder of 1.0 MPa or less
When using together with the CC series air-hydro unit, constant and low speed actuation and intermediate stopping similar to hydraulic units are possible with the use of valves and other pneumatic equipment.

Dimensions (Dimensions other than those shown below are the same as the standard type.)

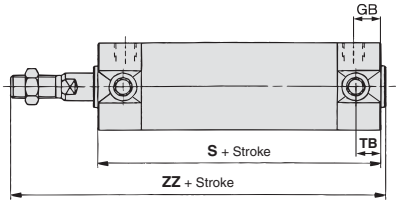

Bore size [mm]	GB	TB	S	ZZ
20	12	11	77	114
25	12	11	77	119
32	12	11	79	121
40	13	12	87	139
50	14	13	102	162
63	14	13	102	162

Specifications

Bore size [mm]	20, 25, 32, 40, 50, 63
Action	Double acting
Fluid	Turbine oil
Proof pressure	1.5 MPa
Maximum operating pressure	1.0 MPa
Minimum operating pressure	0.18 MPa
Piston speed	15 to 300 mm/s
Cushion	Rubber bumper (Standard equipment)
Ambient and fluid temperature	5 to 60 °C
Mounting	Basic, Axial foot, Rod flange, Head flange, Rod trunnion, Head trunnion, Clevis (used for changing the port location by 90°)

∗ Auto switch can be mounted.

Water Resistant

CDG1 [Mounting style] [Type] [Bore size] [Port thread type] **R** – [Stroke] **Z** – [Pivot bracket] [Rod end bracket] – [H7BAL] [-XC6]

CDG1 – With auto switch (Built-in magnet)

R – Water resistant cylinder

R	NBR seals (Nitrile rubber)
V	FKM seals (Fluororubber)

H7BAL – Water resistant 2-colour indication, solid state auto switch

H7BAL	ø 32 to ø 63
G5BAL	ø 80, ø 100

-XC6 – Made to Order

⚠ Caution

Since the scraper is press-fit into the rod cover, it cannot be replaced.

Applicable for use in an environment with water splashing such as food processing and car wash equipment, etc.

Specifications

Bore size [mm]	32, 40, 50, 63, 80, 100
Action	Double acting, Single rod
Cushion	Rubber bumper/Air cushion
Auto switch mounting	Band mounting type
Made to Order	XC6: Made of stainless steel

∗ Specifications other than above are the same as standard type.

Dimensions (Dimensions other than those shown below are the same as the standard type.)

With rubber bumper

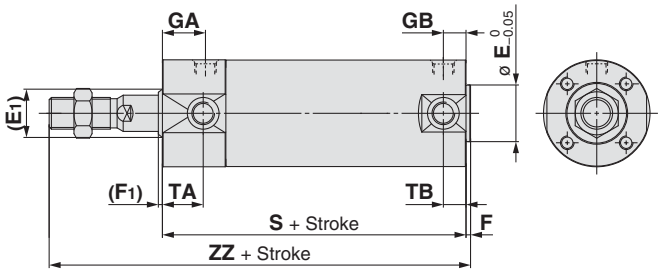

With air cushion

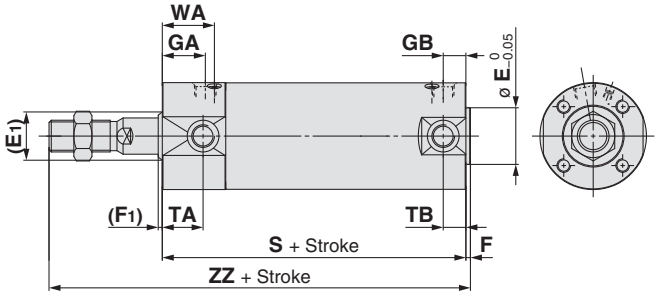

[mm]

Bore size	(E1)	E∗	(F1)	F∗	GA	S	TA	WA	ZZ Male thread	ZZ Female thread
32	17	18	2	2	18	77 (85)	17	22	119 (127)	93 (101)
40	21	25	2	2	19	84 (93)	18	23	136 (145)	101 (110)
50	26	30	2	2	21	97 (109)	20	25	157 (169)	115 (127)
63	26	32	2	2	21	97 (109)	20	25	157 (169)	115 (127)
80	32	40	3	3	28	116 (130)	—	32	190 (204)	138 (152)
100	37	50	3	3	29	117 (131)	—	33	191 (205)	142 (156)

∗ Dimensions marked with "∗" are the same as the standard type.
∗ ( ): Denotes the dimensions for long stroke.

Cylinder with Stable Lubrication Function (Lube-retainer)

CDG1 [Mounting] **Z** [Bore size] **M** [Stroke] [Rod end thread] **Z** – [Pivot bracket] [Rod end bracket] – [Auto switch]

- **With auto switch (Built-in magnet)**
- **Cylinder with Stable Lubrication Function (Lube-retainer)**

Specifications

Bore size [mm]	20, 25, 32, 40, 50, 63, 80, 100
Action	Double acting, Single rod
Minimum operating pressure	0.1 MPa
Cushion	Rubber bumper

∗ Specifications other than the above are the same as the standard type.

Dimensions (Dimensions other than those shown below are the same as the standard type.)

∗ No trunnion mounting female thread is provided on the rod side. (For B: Basic)

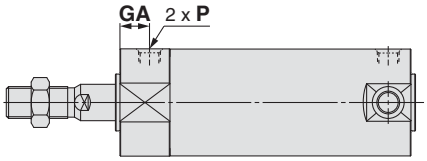

[mm]

Bore size	GA	P	Bore size	GA	P
20	14	M5 x 0.8	**50**	(14)	(Rc 1/4)
25	13	M5 x 0.8	**63**	(14)	(Rc 1/4)
32	(12)	(Rc 1/8)	**80**	(20)	(Rc 3/8)
40	(13)	(Rc 1/8)	**100**	(20)	(Rc 1/2)

∗ When female thread is used, use a washer, etc. to prevent the contact part at the rod end from being deformed depending on the material of the workpiece.
( ): Same as the standard model.
∗ The mounting dimensions of the mounting bracket are the same as the standard type.

⚠ Precautions

Be sure to read this before handling. Refer to the back cover for Safety Instructions. For Actuator and Auto Switch Precautions, refer to "Handling Precautions for SMC Products" and the Operation Manual on SMC website, http://www.smc.eu

Handling

⚠ Warning

1. **Do not operate the cushion valve in the fully closed or fully opened state.**
   Using it in the fully closed state will cause the cushion seal to be damaged. Using it in the fully opened state will cause the piston rod assembly or the cover to be damaged.
2. **Do not turn the cushion valve the number of rotations shown below or more from its fully closed state.**
   If it is turned the number of rotations shown below or more, the cushion valve may come off and jump out by the air pressure, causing a hazard.

Bore size [mm]	Rotations	Hexagon wrench nominal size
20	2	1.5
25	3	1.5
32	4	1.5
40	5	1.5
50	3	3
63	4.5	3
80	5	4
100	5	4

3. **Operate within the specified cylinder speed and kinetic energy.**
   Otherwise, cylinder and seal damage may occur.
4. **Use caution regarding the cushion performance in the low-speed range.**
   There may be individual performance and effect variances when used near 50 mm/s. Please consult with SMC about usage.
5. **When a cylinder is operated with one end fixed and other free (basic, flange types), a bending moment may act on the cylinder due to the vibration generated at the stroke end, which can damage the cylinder. In such a case, install a mounting bracket to suppress the vibration of the cylinder body or reduce the piston speed so that the cylinder does not vibrate. Also, use a mounting bracket to suppress vibrations when moving the cylinder body or when a cylinder is operated horizontally and fixed at one end at a high speed and frequency.**
6. **Do not apply excessive lateral load to the piston rod.**
   Easy checking method
   Minimum operating pressure after the cylinder is mounted to the equipment [MPa] = Minimum operating pressure of cylinder [MPa] + {Load weight [kg] x 9.8 x Friction coefficient of guide/Sectional area of cylinder [mm^2]}
   If smooth operation is confirmed within the above value, the load on the cylinder is the resistance of the thrust only and it can be judged as having no lateral load.

⚠ Caution

1. **Do not use the air cylinder as an air-hydro cylinder.**
   This may result in oil leak.
2. **Install a rod boot without twisting.**
   If the cylinder is installed with its bellows twisted, it could damage the bellows.
3. **Tighten clevis bracket mounting bolts with the following proper tightening torque.**
   ø 20: 1.5 N·m, ø 25 to 32: 2.9 N·m,
   ø 40: 4.9 N·m,
   ø 50: 11.8 N·m, ø 63 to 80: 24.5 N·m,
   ø 100: 42.2 N·m

Disassembly/Replacement

⚠ Caution

1. **Do not replace the bushings.**
   The bushings are press-fit. To replace them, they must be replaced together with the cover assembly.
2. **To replace a seal, apply grease to the new seal before installing it.**
   If the cylinder is put into operation without applying grease to the seal, it could cause the seal to wear significantly, leading to premature air leakage.
3. **Cylinders with ø 50 or larger bore sizes cannot be disassembled.**
   When disassembling cylinders with bore sizes of ø 20 through ø 40, grip the double flat part of either the tube cover or the rod cover with a vise and loosen the other side with a wrench or a monkey wrench etc., and then remove the cover. When re-tightening, tighten approximately 2 degrees more than the original position. (Cylinders with ø 50 or larger bore sizes are tightened with a large tightening torque and cannot be disassembled. If disassembly is required, please contact SMC.)

Construction

With rubber bumper

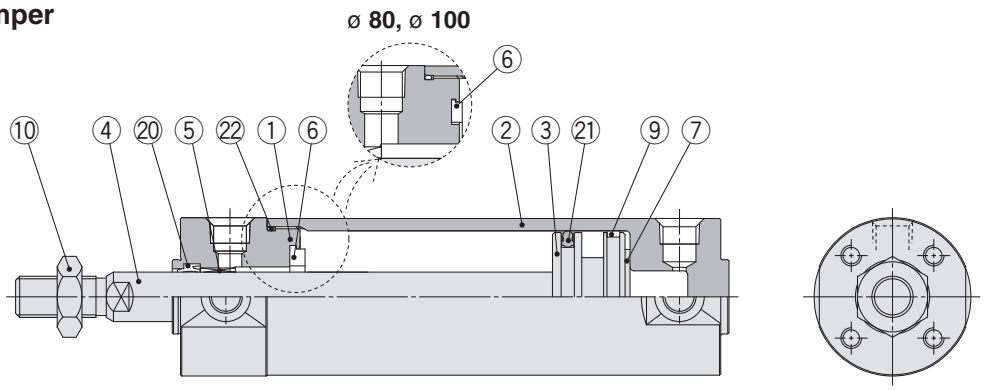

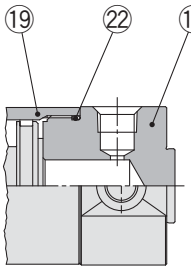

Long stroke

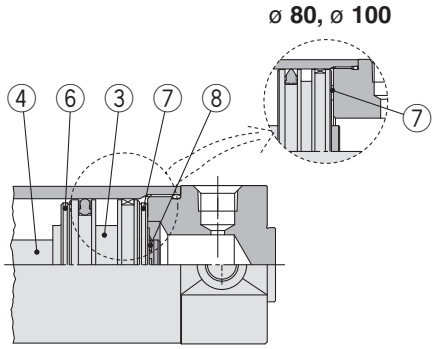

Long stroke
1001 to 1500

With air cushion

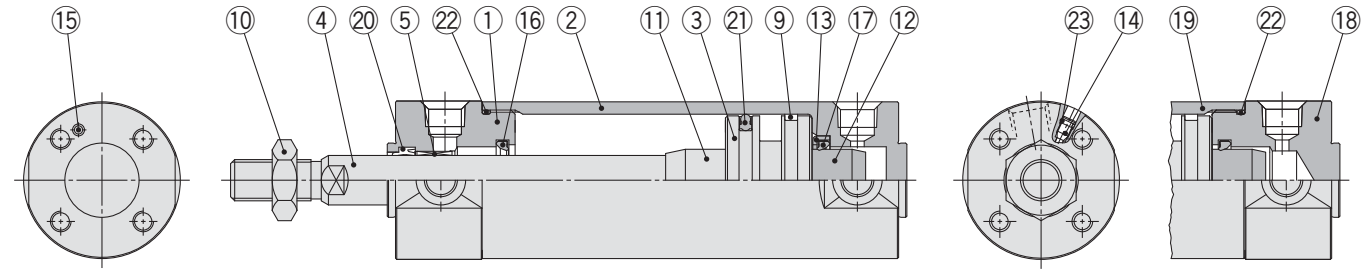

Long stroke

Component Parts

No.	Description	Material	Note
1	**Rod cover**	Aluminium alloy	Hard anodised
2	**Tube cover**	Aluminium alloy	Hard anodised
3	**Piston**	Aluminium alloy	
4	**Piston rod**	Stainless steel	For ø 20 or ø 25 with built-in magnet
		Carbon steel*	Hard chrome plating*
5	**Bushing**	Bearing alloy	
6	**Bumper**	Resin	ø 32 or larger is common.
7	**Bumper**	Resin	
8	**Retaining ring**	Stainless steel	Except ø 80 and ø 100
9	**Wear ring**	Resin	
10	**Rod end nut**	Carbon steel	Zinc chromated
11	**Cushion ring A**	Aluminium alloy	
12	**Cushion ring B**	Aluminium alloy	
13	**Seal retainer**	Rolled steel	Zinc chromated
14	**Cushion valve** ø 40 or smaller	Carbon steel	Electroless nickel plating
	Cushion valve ø 50 or larger	Steel wire	Zinc chromated
15	**Steel ball**	Carbon steel	

Note) For cylinders with auto switches, the magnet is installed in the piston.
∗ The material for ø 20, ø 25 cylinders with auto switches is made of stainless steel.

No.	Description	Material	Note
16	**Cushion seal A**	Urethane	ø 32 or larger is common.
17	**Cushion seal B**	Urethane	
18	**Head cover**	Aluminium alloy	Hard anodised
19	**Cylinder tube**	Aluminium alloy	Hard anodised
20	**Rod seal**	NBR	
21	**Piston seal**	NBR	
22	**Tube gasket**	NBR	
23	**Valve seal**	NBR	

Replacement Parts: Seal Kit

Bore size [mm]	Kit no.	Contents
20	CG1N20Z-PS	Set of the nos. ⑳, ㉑, ㉒
25	CG1N25Z-PS	
32	CG1N32Z-PS	
40	CG1N40Z-PS	

Note) Refer to the Specific Product Precautions on page 10 for Disassembly/Replacement. Order with the kit number according to the bore size.
∗ The seal kit includes a grease pack (10 g).
Order with the following part number when only the grease pack is needed. **Grease pack part number: GR-S-010** (10 g)

Basic: CG1BN

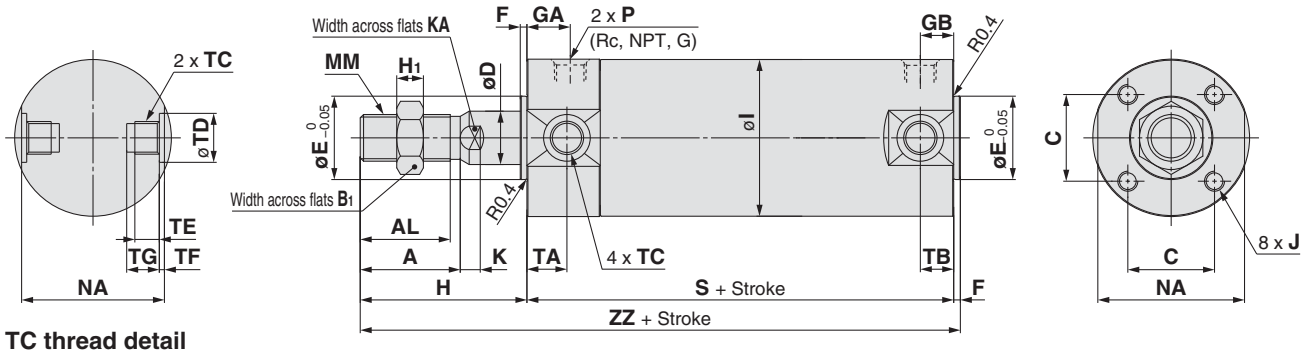

With air cushion

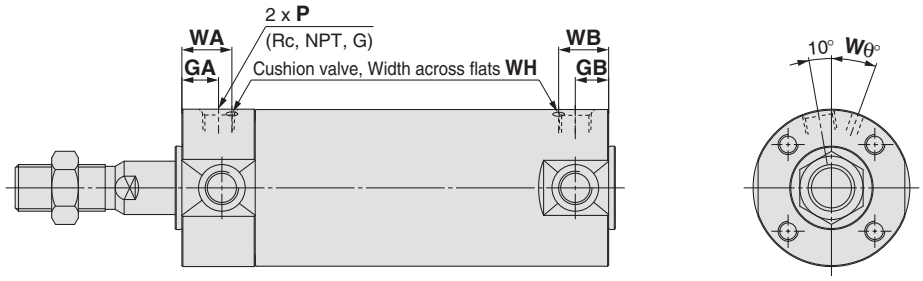

Basic (Without trunnion mounting female thread): CG1ZN

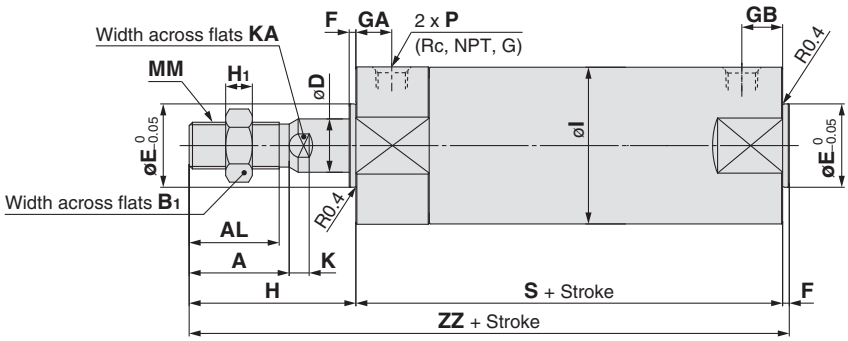

[mm]

Bore size	Stroke range		Rc, NPT port			G port			A	AL	B1	C	D	E	F	H	H1	I	J	K	KA	MM
	Standard	Long stroke	GA	GB	P	GA	GB	P														
20	Up to 200	201 to 1500	12	10 (12)	1/8	12	10 (12)	M5 x 0.8	18	15.5	13	14	8	12	2	35	5	26	M4 x 0.7 depth 7	5	6	M8 x 1.25
25	Up to 300	301 to 1500	12	10 (12)	1/8	12.5	10 (12.5)	M5 x 0.8	22	19.5	17	16.5	10	14	2	40	6	31	M5 x 0.8 depth 7.5	5.5	8	M10 x 1.25
32	Up to 300	301 to 1500	12	10 (12)	1/8	10.5	10 (10.5)	1/8	22	19.5	17	20	12	18	2	40	6	38	M5 x 0.8 depth 8	5.5	10	M10 x 1.25
40	Up to 300	301 to 1500	13	10 (13)	1/8	13	10 (10)	1/8	30	27	19	26	16	25	2	50	8	47	M6 x 1 depth 12	6	14	M14 x 1.5
50	Up to 300	301 to 1500	14	12 (14)	1/4	14	12 (14)	1/4	35	32	27	32	20	30	2	58	11	58	M8 x 1.25 depth 16	7	18	M18 x 1.5
63	Up to 300	301 to 1500	14	12 (14)	1/4	14	12 (14)	1/4	35	32	27	38	20	32	2	58	11	72	M10 x 1.5 depth 16	7	18	M18 x 1.5
80	Up to 300	301 to 1500	20	16 (20)	3/8	17.5	16 (17.5)	3/8	40	37	32	50	25	40	3	71	13	89	M10 x 1.5 depth 22	10	22	M22 x 1.5
100	Up to 300	301 to 1500	20	16 (20)	1/2	17.5	16 (17.5)	1/2	40	37	41	60	30	50	3	71	16	110	M12 x 1.75 depth 22	10	26	M26 x 1.5

[mm]

Bore size	NA	S	TA	TB	ZZ
20	24	69 (77)	11	11	106 (114)
25	29	69 (77)	11	11	111 (119)
32	35.5	71 (79)	11	10 (11)	113 (121)
40	44	78 (87)	12	10 (12)	130 (139)
50	55	90 (102)	13	12 (13)	150 (162)
63	69	90 (102)	13	12 (13)	150 (162)
80	86	108 (122)	—	—	182 (196)
100	106	108 (122)	—	—	182 (196)

Note) ( ): Denotes the dimensions for long stroke.

With Air Cushion

[mm]

Bore size	Rc, NPT, G			WA	WB	Wθ	WH
	GA	GB	P				
20	12	10 (12)	M5 x 0.8	16	15 (16)	25°	1.5
25	12.5	10 (12.5)	M5 x 0.8	16	14.5 (16)	25°	1.5
32	12	10 (12)	1/8	16	14 (16)	25°	1.5
40	13	10 (13)	1/8	17	15 (17)	20°	1.5
50	14	12 (14)	1/4	18	16 (18)	20°	3
63	14	12 (14)	1/4	18	17 (18)	20°	3
80	20	16 (20)	3/8	24	20 (24)	20°	4
100	20	16 (20)	1/2	24	20 (24)	20°	4

TC Thread

[mm]

Bore size	TC	TD	TE	TF	TG
20	M5 x 0.8	$8^{+0.08}_{0}$	4	0.5	5.5
25	M6 x 0.75	$10^{+0.08}_{0}$	5	1	6.5
32	M8 x 1.0	$12^{+0.08}_{0}$	5.5	1	7.5
40	M10 x 1.25	$14^{+0.08}_{0}$	6	1.25	8.5
50	M12 x 1.25	$16^{+0.08}_{0}$	7.5	2	10
63	M14 x 1.5	$18^{+0.08}_{0}$	11.5	3	14.5
80	—	—	—	—	—
100	—	—	—	—	—

∗ Cylinder sizes ø 80 and ø 100 do not have trunnion mounting female thread on the width across flats NA.

Basic: CG1BN

With rod boot

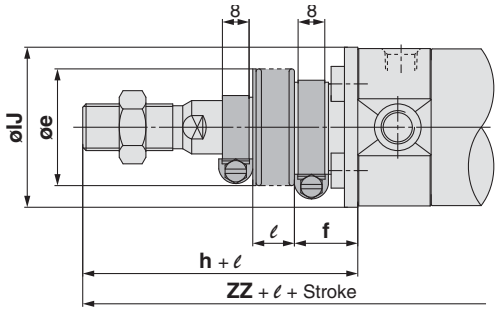

ø 20 to ø 63

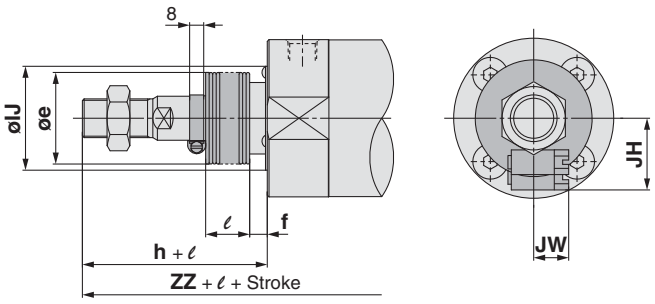

ø 80, ø 100

With Rod Boot [mm]

Bore size	e	f	h	IJ	JH (Reference)	JW (Reference)	ℓ	ZZ
20	30	18	55	27	15.5	10.5	1/4 stroke	126 (134)
25	30	19	62	32	16.5	10.5		133 (141)
32	35	19	62	38	18.5	10.5		135 (143)
40	35	19	70	48	21.5	10.5		150 (159)
50	40	19	78	59	24	10.5		170 (182)
63	40	20	78	72	24	10.5		170 (182)
80	52	10	80	59	—	—		191 (205)
100	62	7	80	71	—	—		191 (205)

∗ The minimum stroke with rod boot is 20 mm.

Female rod end

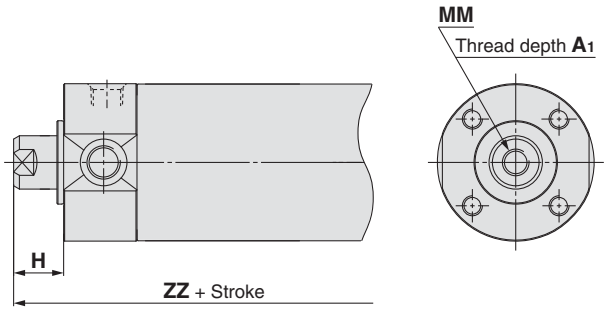

Female Rod End [mm]

Bore size	A_1	H	MM	ZZ
20	8	13	M4 x 0.7	84 (92)
25	8	14	M5 x 0.8	85 (93)
32	12	14	M6 x 1	87 (95)
40	13	15	M8 x 1.25	95 (104)
50	18	16	M10 x 1.5	108 (120)
63	18	16	M10 x 1.5	108 (120)
80	21	19	M14 x 1.5	130 (144)
100	25	22	M16 x 1.5	133 (147)

∗ When female thread is used, use a washer etc. to prevent the contact part at the rod end from being deformed depending on the material of the workpiece.

Axial Foot: CG1LN

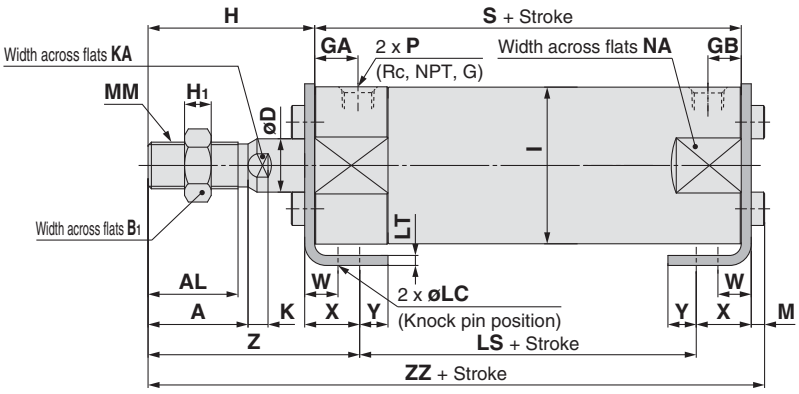

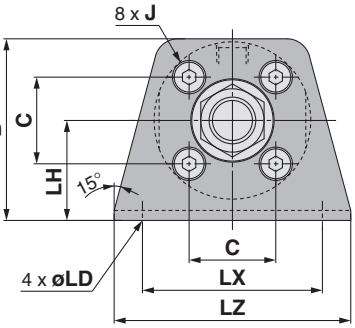

With air cushion

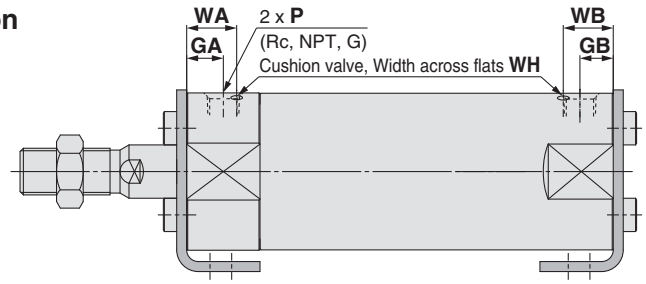

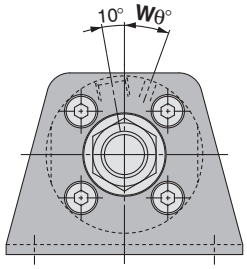

With rod boot

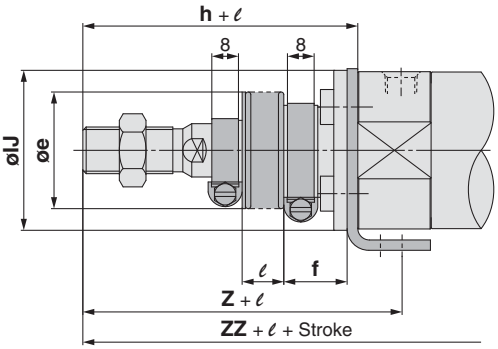

ø 20 to ø 63

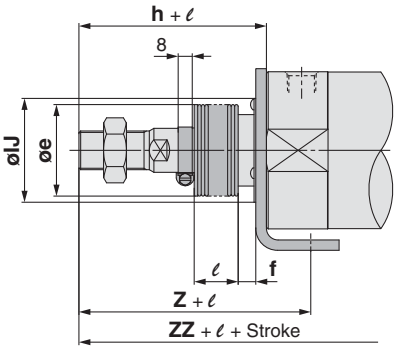

ø 80, ø 100

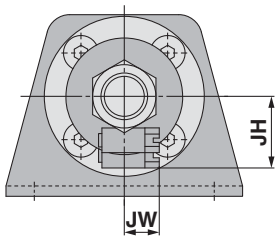

[mm]

Bore size	Stroke range Standard	Stroke range Long stroke	Rc, NPT port GA	Rc, NPT port GB	Rc, NPT port P	G port GA	G port GB	G port P	A	AL	B	B1	C	D	H	H1	I	J	K	KA	LC	LD	LH	LS	LT	LX	LZ	M	MM
20	Up to 200	201 to 1500	12	10 (12)	1/8	12	10 (12)	M5 x 0.8	18	15.5	34	13	14	8	35	5	26	M4 x 0.7	5	6	4	6	20	45 (53)	3	32	44	3	M8 x 1.25
25	Up to 300	301 to 1500	12	10 (12)	1/8	12.5	10 (12.5)	M5 x 0.8	22	19.5	38.5	17	16.5	10	40	6	31	M5 x 0.8	5.5	8	4	6	22	45 (53)	3	36	49	3.5	M10 x 1.25
32	Up to 300	301 to 1500	12	10 (12)	1/8	10.5	10 (10.5)	1/8	22	19.5	45	17	20	12	40	6	38	M5 x 0.8	5.5	10	4	7	25	45 (53)	3	44	58	3.5	M10 x 1.25
40	Up to 300	301 to 1500	13	10 (13)	1/8	13	10 (10)	1/8	30	27	54.5	19	26	16	50	8	47	M6 x 1	6	14	4	7	30	51 (60)	3	54	71	4	M14 x 1.5
50	Up to 300	301 to 1500	14	12 (14)	1/4	14	12 (14)	1/4	35	32	70.5	27	32	20	58	11	58	M8 x 1.25	7	18	5	10	40	55 (67)	4.5	66	86	5	M18 x 1.5
63	Up to 300	301 to 1500	14	12 (14)	1/4	14	12 (14)	1/4	35	32	82.5	27	38	20	58	11	72	M10 x 1.5	7	18	5	12	45	55 (67)	4.5	82	106	5	M18 x 1.5
80	Up to 300	301 to 1500	20	16 (20)	3/8	17.5	16 (17.5)	3/8	40	37	101	32	50	25	71	13	89	M10 x 1.5	10	22	6	11	55	60 (74)	4.5	100	125	5	M22 x 1.5
100	Up to 300	301 to 1500	20	16 (20)	1/2	17.5	16 (17.5)	1/2	40	37	121	41	60	30	71	16	110	M12 x 1.75	10	26	6	14	65	60 (74)	6	120	150	7	M26 x 1.5

[mm]

Bore size	NA	S	W	X	Y	Z	ZZ
20	24	69 (77)	10	15	7	47	110 (118)
25	29	69 (77)	10	15	7	52	115.5 (123.5)
32	35.5	71 (79)	10	16	8	53	117.5 (125.5)
40	44	78 (87)	10	16.5	8.5	63.5	135 (144)
50	55	90 (102)	17.5	22	11	75.5	157.5 (169.5)
63	69	90 (102)	17.5	22	13	75.5	157.5 (169.5)
80	86	108 (122)	20	28.5	14	95	188.5 (202.5)
100	106	108 (122)	20	30	16	95	192 (206)

With Air Cushion

[mm]

Bore size	Rc, NPT, G GA	Rc, NPT, G GB	Rc, NPT, G P	WA	WB	Wθ	WH
20	12	10 (12)	M5 x 0.8	16	15 (16)	25°	1.5
25	12.5	10 (12.5)	M5 x 0.8	16	14.5 (16)	25°	1.5
32	12	10 (12)	1/8	16	14 (16)	25°	1.5
40	13	10 (13)	1/8	17	15 (17)	20°	1.5
50	14	12 (14)	1/4	18	16 (18)	20°	3
63	14	12 (14)	1/4	18	17 (18)	20°	3
80	20	16 (20)	3/8	24	20 (24)	20°	4
100	20	16 (20)	1/2	24	20 (24)	20°	4

With Rod Boot

[mm]

Bore size	e	f	h	IJ	JH (Reference)	JW (Reference)	ℓ	Z	ZZ
20	30	18	55	27	15.5	10.5	1/4 stroke	67	130 (138)
25	30	19	62	32	16.5	10.5		74	137.5 (145.5)
32	35	19	62	38	18.5	10.5		75	139.5 (147.5)
40	35	19	70	48	21.5	10.5		83.5	155 (164)
50	40	19	78	59	24	10.5		95.5	177.5 (189.5)
63	40	20	78	72	24	10.5		95.5	177.5 (189.5)
80	52	10	80	59	—	—		104	197.5 (211.5)
100	62	7	80	71	—	—		104	201 (215)

∗ For female rod end, since the wrench flap (K and KA portions) will be inside of the bracket when the piston rod is retracted at the stroke end, extend the piston rod to tighten the nut using a tool, and mount a workpiece on the rod end.
∗ Refer to the basic type for the female rod end.
Note) ( ): Denotes the dimensions for long stroke.

∗ The minimum stroke with rod boot is 20 mm.

Rod Flange: CG1FN

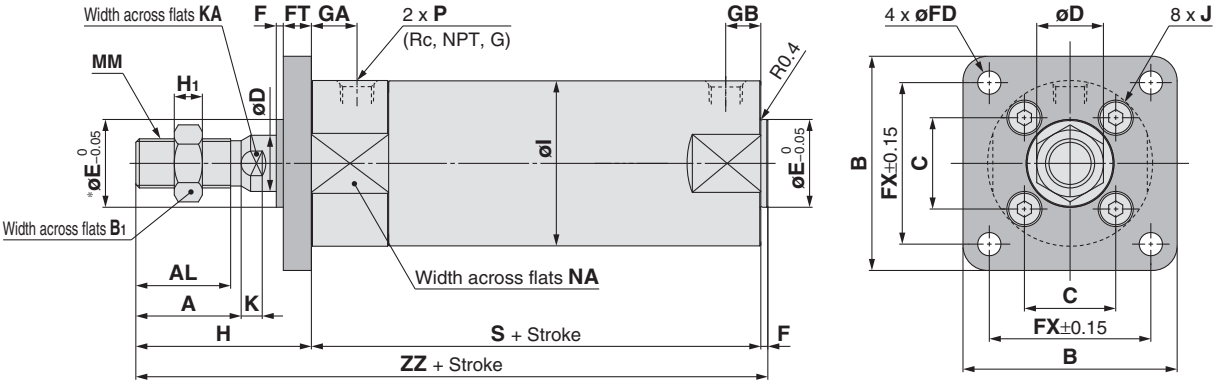

∗ End boss is machined on the flange for øE.

With air cushion

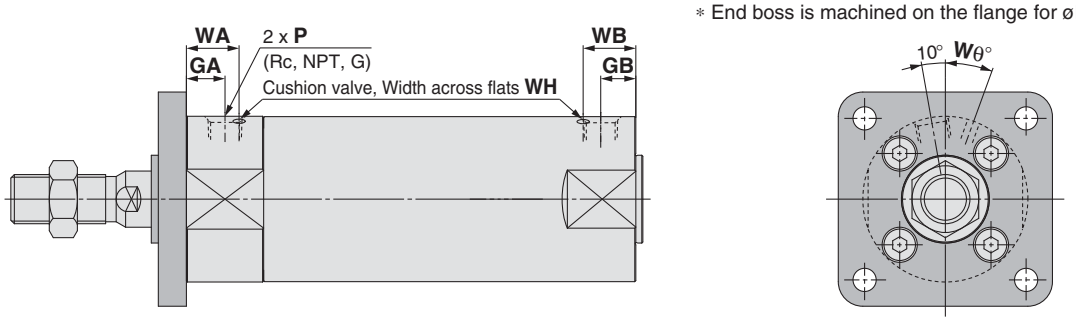

With rod boot

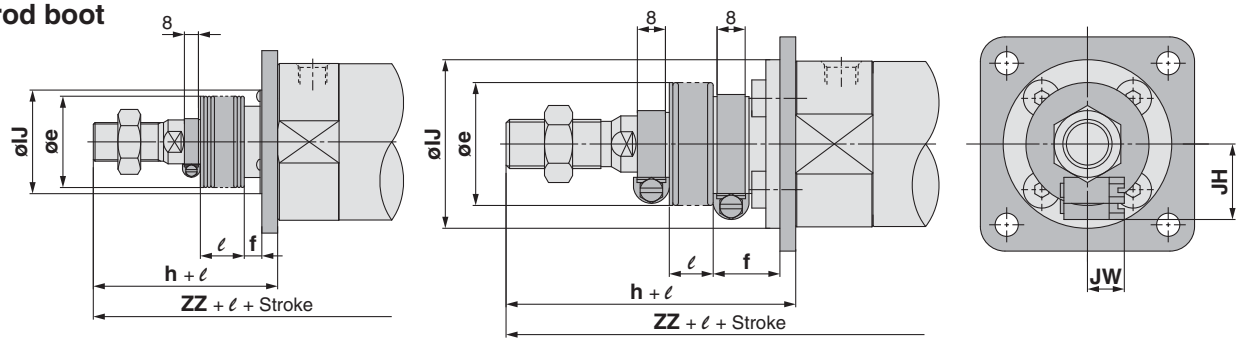

ø 20 to ø 63 **ø 80, ø 100**

[mm]

Bore size	Stroke range		Rc, NPT port			G port			A	AL	B	B1	C	D	E	F	FD	FT	FX	H	H1	I	J	K
	Standard	Long stroke	GA	GB	P	GA	GB	P																
20	Up to 200	201 to 1500	12	10 (12)	1/8	12	10 (12)	M5 x 0.8	18	15.5	40	13	14	8	12	2	5.5	6	28	35	5	26	M4 x 0.7	5
25	Up to 300	301 to 1500	12	10 (12)	1/8	12.5	10 (12.5)	M5 x 0.8	22	19.5	44	17	16.5	10	14	2	5.5	7	32	40	6	31	M5 x 0.8	5.5
32	Up to 300	301 to 1500	12	10 (12)	1/8	10.5	10 (10.5)	1/8	22	19.5	53	17	20	12	18	2	6.6	7	38	40	6	38	M5 x 0.8	5.5
40	Up to 300	301 to 1500	13	10 (13)	1/8	13	10 (10)	1/8	30	27	61	19	26	16	25	2	6.6	8	46	50	8	47	M6 x 1	6
50	Up to 300	301 to 1500	14	12 (14)	1/4	14	12 (14)	1/4	35	32	76	27	32	20	30	2	9	9	58	58	11	58	M8 x 1.25	7
63	Up to 300	301 to 1500	14	12 (14)	1/4	14	12 (14)	1/4	35	32	92	27	38	20	32	2	11	9	70	58	11	72	M10 x 1.5	7
80	Up to 300	301 to 1500	20	16 (20)	3/8	17.5	16 (17.5)	3/8	40	37	104	32	50	25	40	3	11	11	82	71	13	89	M10 x 1.5	10
100	Up to 300	301 to 1500	20	16 (20)	1/2	17.5	16 (17.5)	1/2	40	37	128	41	60	30	50	3	14	14	100	71	16	110	M12 x 1.75	10

[mm]

Bore size	KA	MM	NA	S	ZZ
20	6	M8 x 1.25	24	69 (77)	106 (114)
25	8	M10 x 1.25	29	69 (77)	111 (119)
32	10	M10 x 1.25	35.5	71 (79)	113 (121)
40	14	M14 x 1.5	44	78 (87)	130 (139)
50	18	M18 x 1.5	55	90 (102)	150 (162)
63	18	M18 x 1.5	69	90 (102)	150 (162)
80	22	M22 x 1.5	86	108 (122)	182 (196)
100	26	M26 x 1.5	106	108 (122)	182 (196)

With Air Cushion

[mm]

Bore size	Rc, NPT, G			WA	WB	Wθ	WH
	GA	GB	P				
20	12	10 (12)	M5 x 0.8	16	15 (16)	25°	1.5
25	12.5	10 (12.5)	M5 x 0.8	16	14.5 (16)	25°	1.5
32	12	10 (12)	1/8	16	14 (16)	25°	1.5
40	13	10 (13)	1/8	17	15 (17)	20°	1.5
50	14	12 (14)	1/4	18	16 (18)	20°	3
63	14	12 (14)	1/4	18	17 (18)	20°	3
80	20	16 (20)	3/8	24	20 (24)	20°	4
100	20	16 (20)	1/2	24	20 (24)	20°	4

With Rod Boot

[mm]

Bore size	e	f	h	IJ	JH (Reference)	JW (Reference)	ℓ	ZZ
20	30	18	55	27	15.5	10.5	1/4 stroke	126 (134)
25	30	19	62	32	16.5	10.5		133 (141)
32	35	19	62	38	18.5	10.5		135 (143)
40	35	19	70	48	21.5	10.5		150 (159)
50	40	19	78	59	24	10.5		170 (182)
63	40	20	78	72	24	10.5		170 (182)
80	52	10	80	59	—	—		191 (205)
100	62	7	80	71	—	—		191 (205)

∗ For female rod end, since the wrench flap (K and KA portions) will be inside of the bracket when the piston rod is retracted at the stroke end, extend the piston rod to tighten the nut using a tool, and mount a workpiece on the rod end.
∗ Refer to the basic type for the female rod end.
Note) ( ): Denotes the dimensions for long stroke.

∗ The minimum stroke with rod boot is 20 mm.

Head Flange: CG1GN

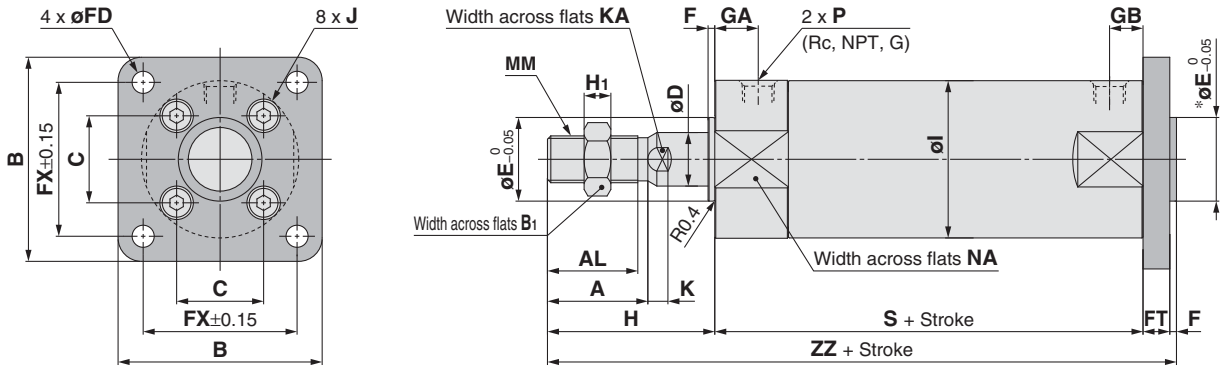

∗ End boss is machined on the flange for øE.

With air cushion

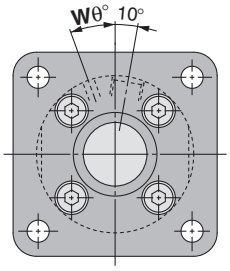

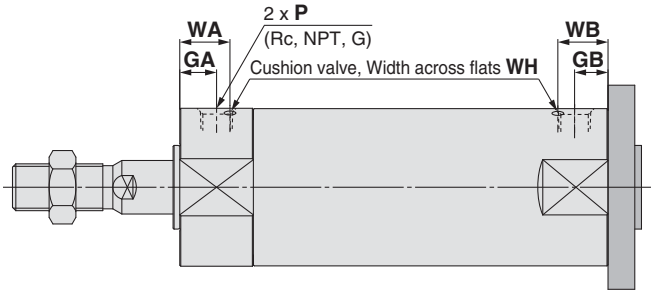

With rod boot

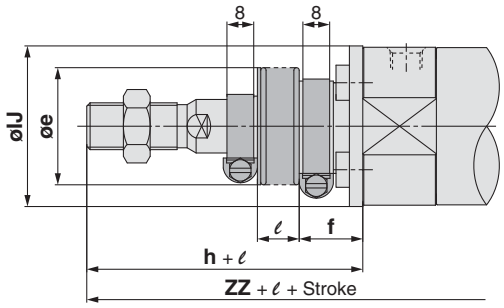

ø 20 to ø 63

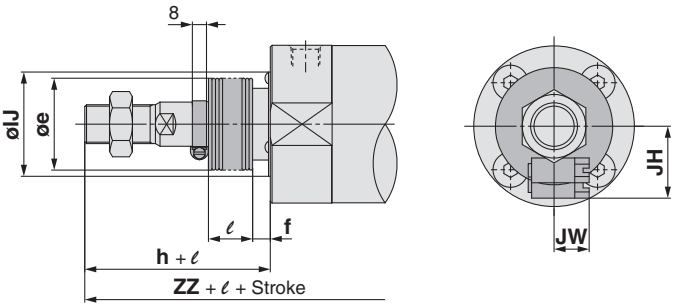

ø 80, ø 100

[mm]

Bore size	Stroke range		Rc, NPT port			G port			A	AL	B	B1	C	D	E	F	FD	FT	FX	H	H1	I	J	K
	Standard	Long stroke	GA	GB	P	GA	GB	P																
20	Up to 200	201 to 1500	12	10 (12)	1/8	12	10 (12)	M5 x 0.8	18	15.5	40	13	14	8	12	2	5.5	6	28	35	5	26	M4 x 0.7	5
25	Up to 300	301 to 1500	12	10 (12)	1/8	12.5	10 (12.5)	M5 x 0.8	22	19.5	44	17	16.5	10	14	2	5.5	7	32	40	6	31	M5 x 0.8	5.5
32	Up to 300	301 to 1500	12	10 (12)	1/8	10.5	10 (10.5)	1/8	22	19.5	53	17	20	12	18	2	6.6	7	38	40	6	38	M5 x 0.8	5.5
40	Up to 300	301 to 1500	13	10 (13)	1/8	13	10 (10)	1/8	30	27	61	19	26	16	25	2	6.6	8	46	50	8	47	M6 x 1	6
50	Up to 300	301 to 1500	14	12 (14)	1/4	14	12 (14)	1/4	35	32	76	27	32	20	30	2	9	9	58	58	11	58	M8 x 1.25	7
63	Up to 300	301 to 1500	14	12 (14)	1/4	14	12 (14)	1/4	35	32	92	27	38	20	32	2	11	9	70	58	11	72	M10 x 1.5	7
80	Up to 300	301 to 1500	20	16 (20)	3/8	17.5	16 (17.5)	3/8	40	37	104	32	50	25	40	3	11	11	82	71	13	89	M10 x 1.5	10
100	Up to 300	301 to 1500	20	16 (20)	1/2	17.5	16 (17.5)	1/2	40	37	128	41	60	30	50	3	14	14	100	71	16	110	M12 x 1.75	10

[mm]

Bore size	KA	MM	NA	S	ZZ
20	6	M8 x 1.25	24	69 (77)	112 (120)
25	8	M10 x 1.25	29	69 (77)	118 (126)
32	10	M10 x 1.25	35.5	71 (79)	120 (128)
40	14	M14 x 1.5	44	78 (87)	138 (147)
50	18	M18 x 1.5	55	90 (102)	159 (171)
63	18	M18 x 1.5	69	90 (102)	159 (171)
80	22	M22 x 1.5	86	108 (122)	193 (207)
100	26	M26 x 1.5	106	108 (122)	196 (210)

∗ Refer to the basic type for the female rod end.
Note) ( ): Denotes the dimensions for long stroke.

With Air Cushion

[mm]

Bore size	Rc, NPT, G			WA	WB	Wθ	WH
	GA	GB	P				
20	12	10 (12)	M5 x 0.8	16	15 (16)	25°	1.5
25	12.5	10 (12.5)	M5 x 0.8	16	14.5 (16)	25°	1.5
32	12	10 (12)	1/8	16	14 (16)	25°	1.5
40	13	10 (13)	1/8	17	15 (17)	20°	1.5
50	14	12 (14)	1/4	18	16 (18)	20°	3
63	14	12 (14)	1/4	18	17 (18)	20°	3
80	20	16 (20)	3/8	24	20 (24)	20°	4
100	20	16 (20)	1/2	24	20 (24)	20°	4

With Rod Boot

[mm]

Bore size	e	f	h	IJ	JH (Reference)	JW (Reference)	ℓ	ZZ
20	30	18	55	27	15.5	10.5	1/4 stroke	132 (140)
25	30	19	62	32	16.5	10.5		140 (148)
32	35	19	62	38	18.5	10.5		142 (150)
40	35	19	70	48	21.5	10.5		158 (167)
50	40	19	78	59	24	10.5		179 (191)
63	40	20	78	72	24	10.5		179 (191)
80	52	10	80	59	—	—		202 (216)
100	62	7	80	71	—	—		205 (219)

∗ The minimum stroke with rod boot is 20 mm.

Rod Trunnion: CG1UN

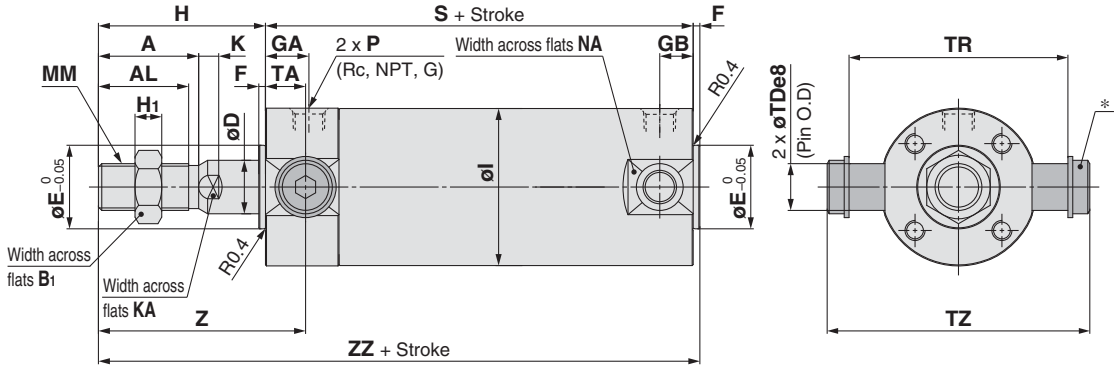

∗ Constructed of a trunnion pin, flat washer and hexagon socket head cap bolt.

With air cushion

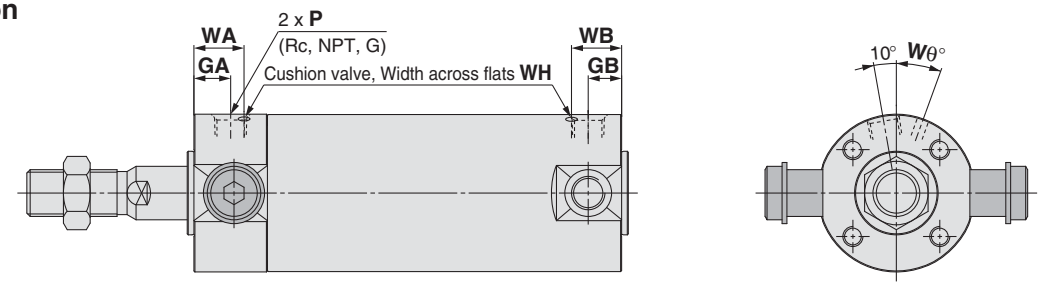

With rod boot

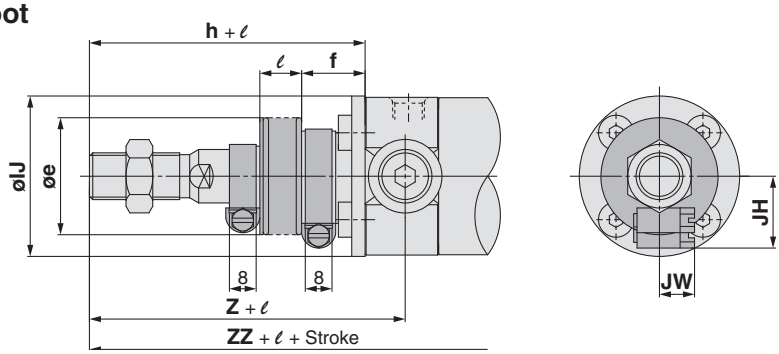

[mm]

Bore size	Stroke range Standard	Stroke range Long stroke	Rc, NPT port GA	Rc, NPT port GB	Rc, NPT port P	G port GA	G port GB	G port P	A	AL	B1	D	E	F	H	H1	I	K	KA	MM	NA	S
20	Up to 200	201 to 1500	12	10 (12)	1/8	12	10 (12)	M5 x 0.8	18	15.5	13	8	12	2	35	5	26	5	6	M8 x 1.25	24	69 (77)
25	Up to 300	301 to 1500	12	10 (12)	1/8	12.5	10 (12.5)	M5 x 0.8	22	19.5	17	10	14	2	40	6	31	5.5	8	M10 x 1.25	29	69 (77)
32	Up to 300	301 to 1500	12	10 (12)	1/8	10.5	10 (10.5)	1/8	22	19.5	17	12	18	2	40	6	38	5.5	10	M10 x 1.25	35.5	71 (79)
40	Up to 300	301 to 1500	13	10 (13)	1/8	13	10 (10)	1/8	30	27	19	16	25	2	50	8	47	6	14	M14 x 1.5	44	78 (87)
50	Up to 300	301 to 1500	14	12 (14)	1/4	14	12 (14)	1/4	35	32	27	20	30	2	58	11	58	7	18	M18 x 1.5	55	90 (102)
63	Up to 300	301 to 1500	14	12 (14)	1/4	14	12 (14)	1/4	35	32	27	20	32	2	58	11	72	7	18	M18 x 1.5	69	90 (102)

[mm]

Bore size	TA	TDe8	TR	TZ	Z	ZZ
20	11	$8^{-0.025}_{-0.047}$	39	47.6	46	106 (114)
25	11	$10^{-0.025}_{-0.047}$	43	53	51	111 (119)
32	11	$12^{-0.032}_{-0.059}$	54.5	67.7	51	113 (121)
40	12	$14^{-0.032}_{-0.059}$	65.5	78.7	62	130 (139)
50	13	$16^{-0.032}_{-0.059}$	80	98.6	71	150 (162)
63	13	$18^{-0.032}_{-0.059}$	98	119.2	71	150 (162)

∗ Refer to the basic type for the female rod end.

Note) ( ): Denotes the dimensions for long stroke.

With Air Cushion

[mm]

Bore size	Rc, NPT, G GA	Rc, NPT, G GB	Rc, NPT, G P	WA	WB	Wθ	WH
20	12	10 (12)	M5 x 0.8	16	15 (16)	25°	1.5
25	12.5	10 (12.5)	M5 x 0.8	16	14.5 (16)	25°	1.5
32	12	10 (12)	1/8	16	14 (16)	25°	1.5
40	13	10 (13)	1/8	17	15 (17)	20°	1.5
50	14	12 (14)	1/4	18	16 (18)	20°	3
63	14	12 (14)	1/4	18	17 (18)	20°	3

With Rod Boot

[mm]

Bore size	e	f	h	IJ	JH (Reference)	JW (Reference)	ℓ	Z	ZZ
20	30	18	55	27	15.5	10.5	1/4 stroke	66	126 (134)
25	30	19	62	32	16.5	10.5		73	133 (141)
32	35	19	62	38	18.5	10.5		73	135 (143)
40	35	19	70	48	21.5	10.5		82	150 (159)
50	40	19	78	59	24	10.5		91	170 (182)
63	40	20	78	72	24	10.5		91	170 (182)

∗ The minimum stroke with rod boot is 20 mm.

Head Trunnion: CG1TN

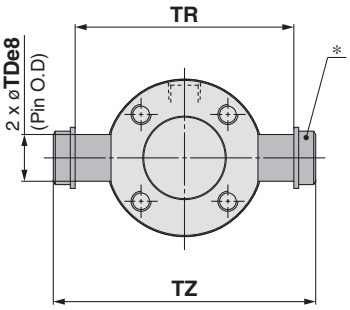

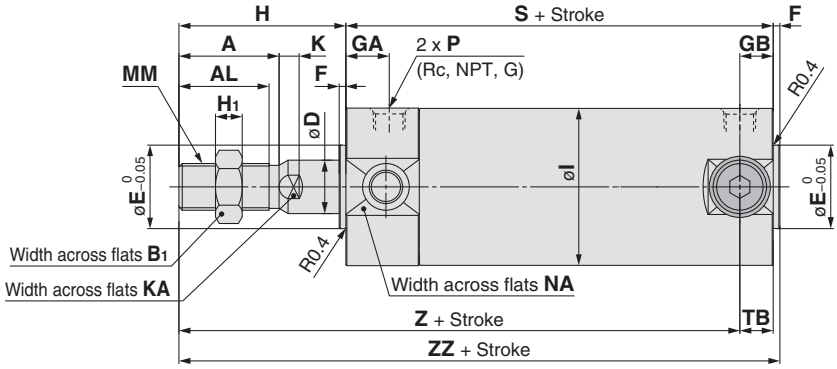

∗ Constructed of a trunnion pin, flat washer and hexagon socket head cap bolt.

With air cushion

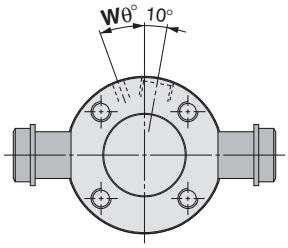

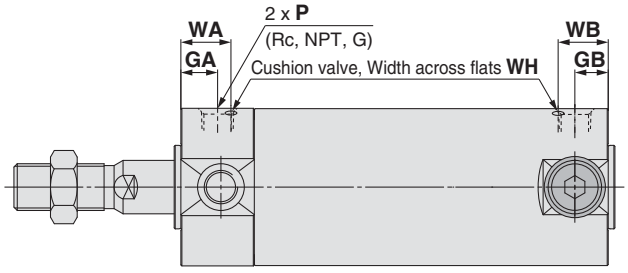

With rod boot

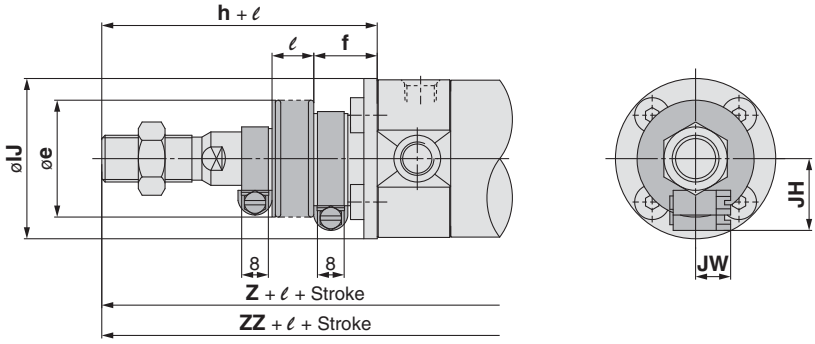

[mm]

Bore size	Stroke range		Rc, NPT port			G port			A	AL	B1	D	E	F	H	H1	I	K	KA	MM	NA	S
	Standard	Long stroke	GA	GB	P	GA	GB	P														
20	Up to 200	201 to 1500	12	10 (12)	1/8	12	10 (12)	M5 x 0.8	18	15.5	13	8	12	2	35	5	26	5	6	M8 x 1.25	24	69 (77)
25	Up to 300	301 to 1500	12	10 (12)	1/8	12.5	10 (12.5)	M5 x 0.8	22	19.5	17	10	14	2	40	6	31	5.5	8	M10 x 1.25	29	69 (77)
32	Up to 300	301 to 1500	12	10 (12)	1/8	10.5	10 (10.5)	1/8	22	19.5	17	12	18	2	40	6	38	5.5	10	M10 x 1.25	35.5	71 (79)
40	Up to 300	301 to 1500	13	10 (13)	1/8	13	10 (10)	1/8	30	27	19	16	25	2	50	8	47	6	14	M14 x 1.5	44	78 (87)
50	Up to 300	301 to 1500	14	12 (14)	1/4	14	12 (14)	1/4	35	32	27	20	30	2	58	11	58	7	18	M18 x 1.5	55	90 (102)
63	Up to 300	301 to 1500	14	12 (14)	1/4	14	12 (14)	1/4	35	32	27	20	32	2	58	11	72	7	18	M18 x 1.5	69	90 (102)

[mm]

Bore size	TB	TDe8	TR	TZ	Z	ZZ
20	11	$8^{-0.025}_{-0.047}$	39	47.6	93 (101)	106 (114)
25	11	$10^{-0.025}_{-0.047}$	43	53	98 (106)	111 (119)
32	10 (11)	$12^{-0.032}_{-0.059}$	54.5	67.7	101 (108)	113 (121)
40	10 (12)	$14^{-0.032}_{-0.059}$	65.5	78.7	118 (125)	130 (139)
50	12 (13)	$16^{-0.032}_{-0.059}$	80	98.6	136 (147)	150 (162)
63	12 (13)	$18^{-0.032}_{-0.059}$	98	119.2	136 (147)	150 (162)

∗ Refer to the basic type for the female rod end.
Note) ( ): Denotes the dimensions for long stroke.

With Air Cushion

[mm]

Bore size	Rc, NPT, G			WA	WB	Wθ	WH
	GA	GB	P				
20	12	10 (12)	M5 x 0.8	16	15 (16)	25°	1.5
25	12.5	10 (12.5)	M5 x 0.8	16	14.5 (16)	25°	1.5
32	12	10 (12)	1/8	16	14 (16)	25°	1.5
40	13	10 (13)	1/8	17	15 (17)	20°	1.5
50	14	12 (14)	1/4	18	16 (18)	20°	3
63	14	12 (14)	1/4	18	17 (18)	20°	3

With Rod Boot

[mm]

Bore size	e	f	h	IJ	JH Reference	JW Reference	ℓ	Z	ZZ
20	30	18	55	27	15.5	10.5	1/4 stroke	113 (121)	126 (134)
25	30	19	62	32	16.5	10.5		120 (128)	133 (141)
32	35	19	62	38	18.5	10.5		123 (130)	135 (143)
40	35	19	70	48	21.5	10.5		138 (145)	150 (159)
50	40	19	78	59	24	10.5		156 (167)	170 (182)
63	40	20	78	72	24	10.5		156 (167)	170 (182)

∗ The minimum stroke with rod boot is 20 mm.

Clevis: CG1DN (ø 20 to ø 63)

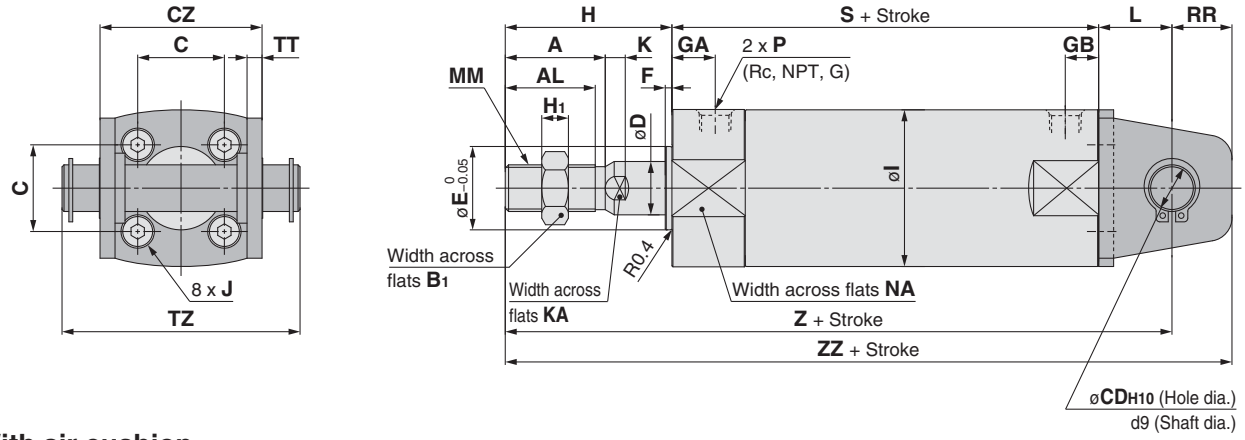

With air cushion

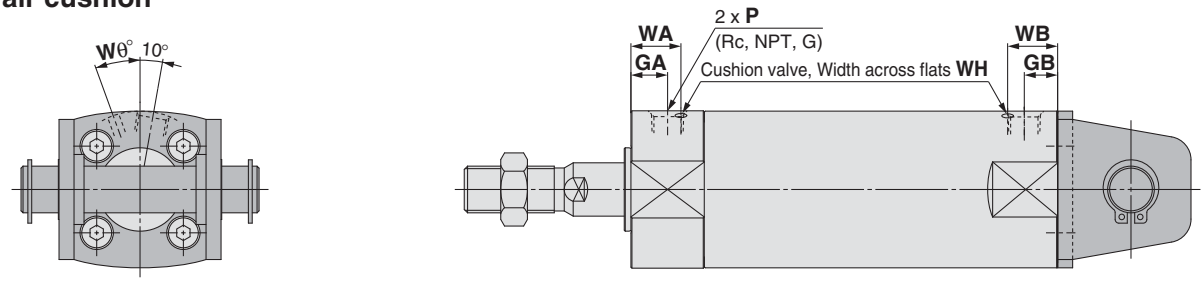

With rod boot

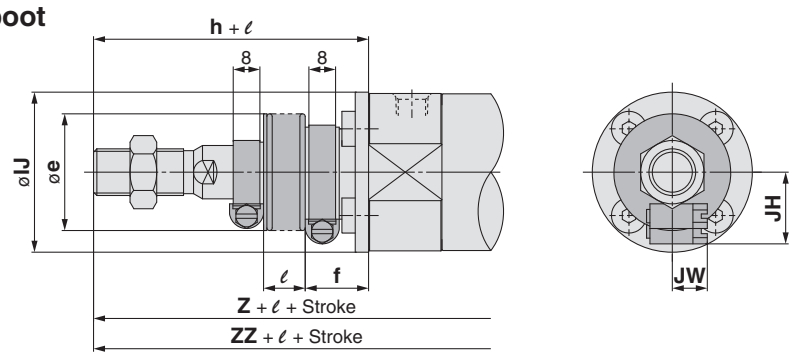

[mm]

Bore size	Stroke range		Rc, NPT port			G port			A	AL	B1	C	CD	CZ	D	E	F	H	H1	I	J	K	KA	L	MM	NA
	Standard	Long stroke	GA	GB	P	GA	GB	P																		
20	Up to 200	201 to 1500	12	10 (12)	1/8	12	10 (12)	M5 x 0.8	18	15.5	13	14	8	29	8	12	2	35	5	26	M4 x 0.7	5	6	14	M8 x 1.25	24
25	Up to 300	301 to 1500	12	10 (12)	1/8	12.5	10 (12.5)	M5 x 0.8	22	19.5	17	16.5	10	33	10	14	2	40	6	31	M5 x 0.8	5.5	8	16	M10 x 1.25	29
32	Up to 300	301 to 1500	12	10 (12)	1/8	10.5	10 (10.5)	1/8	22	19.5	17	20	12	40	12	18	2	40	6	38	M5 x 0.8	5.5	10	20	M10 x 1.25	35.5
40	Up to 300	301 to 1500	13	10 (13)	1/8	13	10 (10)	1/8	30	27	19	26	14	49	16	25	2	50	8	47	M6 x 1	6	14	22	M14 x 1.5	44
50	Up to 300	301 to 1500	14	12 (14)	1/4	14	12 (14)	1/4	35	32	27	32	16	60	20	30	2	58	11	58	M8 x 1.25	7	18	25	M18 x 1.5	55
63	Up to 300	301 to 1500	14	12 (14)	1/4	14	12 (14)	1/4	35	32	27	38	18	74	20	32	2	58	11	72	M10 x 1.5	7	18	30	M18 x 1.5	69

[mm]

Bore size	RR	S	TT	TZ	Z	ZZ	Applicable pin part no.
20	11	69 (77)	3.2	43.4	118 (126)	129 (137)	CD-G02
25	13	69 (77)	3.2	48	125 (133)	138 (146)	CD-G25
32	15	71 (79)	4.5	59.4	131 (139)	146 (154)	CD-G03
40	18	78 (87)	4.5	71.4	150 (159)	168 (177)	CD-G04
50	20	90 (102)	6	86	173 (185)	193 (205)	CD-G05
63	22	90 (102)	8	105.4	178 (190)	200 (212)	CD-G06

With Air Cushion

[mm]

Bore size	Rc, NPT, G			WA	WB	Wθ	WH
	GA	GB	P				
20	12	10 (12)	M5 x 0.8	16	15 (16)	25°	1.5
25	12.5	10 (12.5)	M5 x 0.8	16	14.5 (16)	25°	1.5
32	12	10 (12)	1/8	16	14 (16)	25°	1.5
40	13	10 (13)	1/8	17	15 (17)	20°	1.5
50	14	12 (14)	1/4	18	16 (18)	20°	3
63	14	12 (14)	1/4	18	17 (18)	20°	3

With Rod Boot

[mm]

Bore size	e	f	h	IJ	JH (Reference)	JW (Reference)	ℓ	Z	ZZ
20	30	18	55	27	15.5	10.5	1/4 stroke	138 (146)	149 (157)
25	30	19	62	32	16.5	10.5		147 (155)	160 (168)
32	35	19	62	38	18.5	10.5		153 (161)	168 (176)
40	35	19	70	48	21.5	10.5		170 (179)	188 (197)
50	40	19	78	59	24	10.5		193 (205)	213 (225)
63	40	20	78	72	24	10.5		198 (210)	220 (232)

∗ A clevis pin, retaining rings and mounting bolts are included. Refer to the basic type for the female rod end.
Note) ( ): Denotes the dimensions for long stroke.

∗ The minimum stroke with rod boot is 20 mm.

Clevis: CG1DN (ø 80, ø 100)

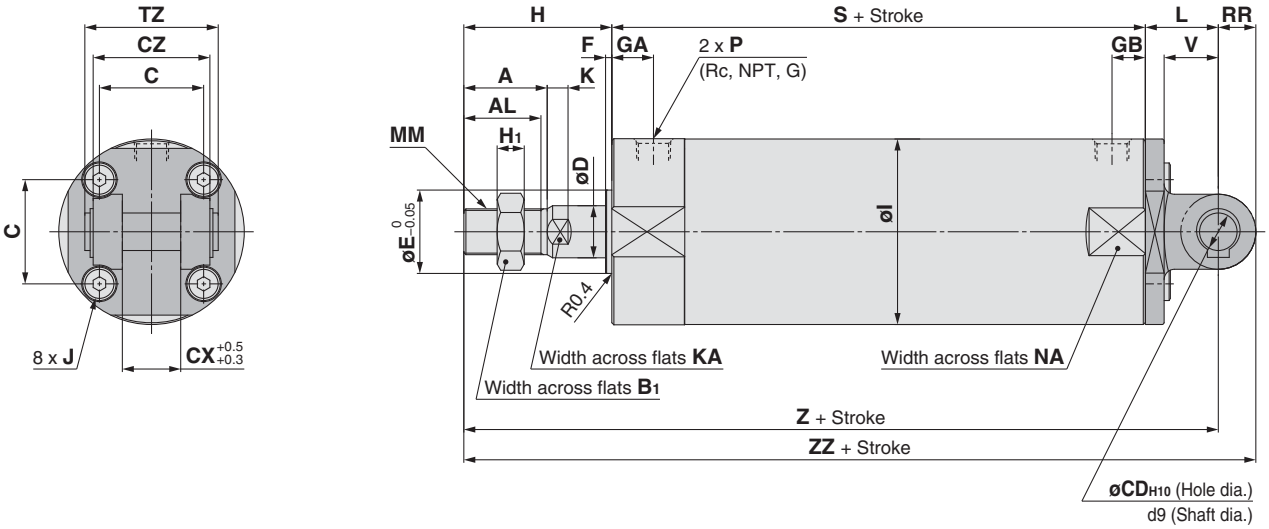

With air cushion

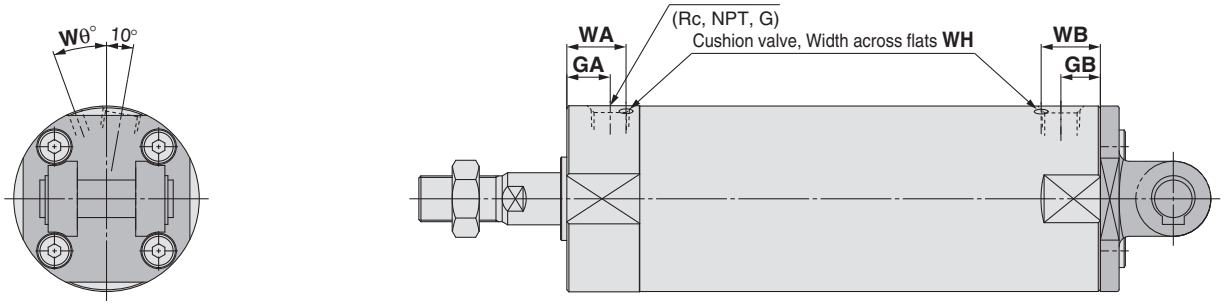

With rod boot

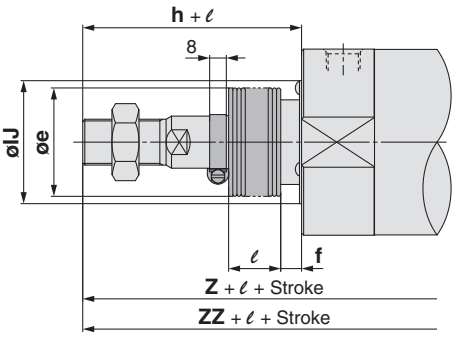

[mm]

Bore size	Stroke range		Rc, NPT port			G port			A	AL	B1	C	CD	CX	CZ	D	E	F	H	H1	I	J	K	KA	L	MM	NA
	Standard	Long stroke	GA	GB	P	GA	GB	P																			
80	Up to 300	301 to 1500	20	16 (20)	3/8	17.5	16 (17.5)	3/8	40	37	32	50	18	28	56	25	40	3	71	13	89	M10 x 1.5	10	22	35	M22 x 1.5	86
100	Up to 300	301 to 1500	20	16 (20)	1/2	17.5	16 (17.5)	1/2	40	37	41	60	22	32	64	30	50	3	71	16	110	M12 x 1.75	10	26	43	M26 x 1.5	106

[mm]

Bore size	RR	S	TZ	V	Z	ZZ	Applicable pin part no.
80	18	108 (122)	64	26	214 (228)	232 (246)	IY-G08
100	22	108 (122)	72	32	222 (236)	244 (258)	IY-G10

∗ Refer to the basic type for the female rod end.
Note) ( ): Denotes the dimensions for long stroke.

With Air Cushion

[mm]

Bore size	Rc, NPT, G			WA	WB	Wθ	WH
	GA	GB	P				
80	20	16 (20)	3/8	24	20 (24)	20°	4
100	20	16 (20)	1/2	24	20 (24)	20°	4

With Rod Boot

[mm]

Bore size	e	f	h	IJ	ℓ	Z	ZZ
80	52	10	80	59	1/4 stroke	223 (237)	241 (255)
100	62	7	80	71		231 (245)	253 (267)

∗ The minimum stroke with rod boot is 20 mm.

With Pivot Bracket [( ): Denotes the dimensions for long stroke.]

Rod Trunnion (U) with Pivot Bracket

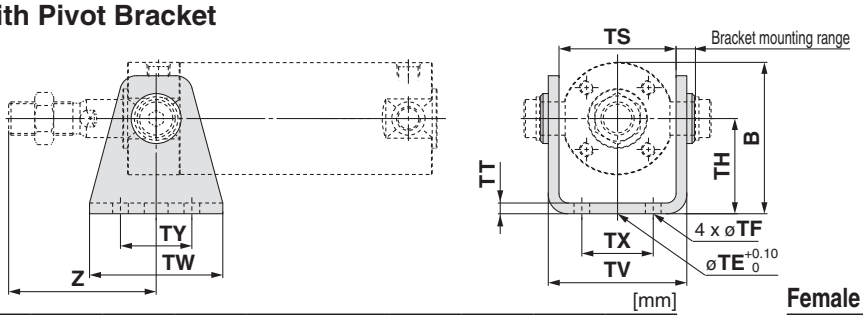

Male Thread [mm]

Bore size	B	TE	TF	TH	TS	TT	TV	TW	TX	TY	Z
20	38	10	5.5	25	28	3.2	35.8	42	16	28	46
25	45.5	10	5.5	30	33	3.2	39.8	42	20	28	51
32	54	10	6.6	35	40	4.5	49.4	48	22	28	51
40	63.5	10	6.6	40	49	4.5	58.4	56	30	30	62
50	79	20	9	50	60	6	72.4	64	36	36	71
63	96	20	11	60	74	8	90.4	74	46	46	71

Female Thread [mm]

Bore size	Z
20	24
25	25
32	25
40	27
50	29
63	29

Head Trunnion (T) with Pivot Bracket

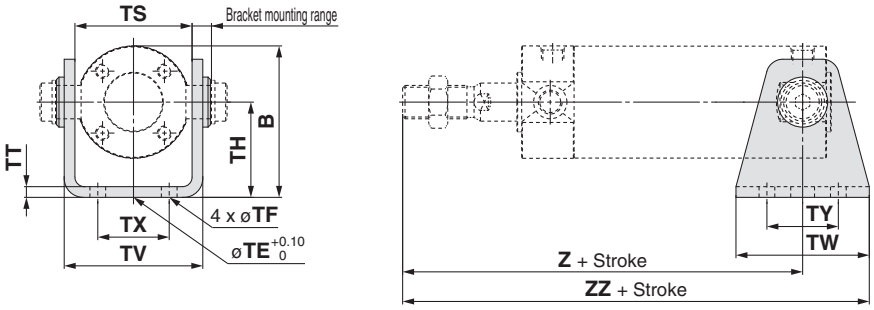

Male Thread [mm]

Bore size	B	TE	TF	TH	TS	TT	TV	TW	TX	TY	Z	ZZ
20	38	10	5.5	25	28	3.2	35.8	42	16	28	93 (101)	114 (122)
25	45.5	10	5.5	30	33	3.2	39.8	42	20	28	98 (106)	119 (127)
32	54	10	6.6	35	40	4.5	49.4	48	22	28	101 (108)	125 (132)
40	63.5	10	6.6	40	49	4.5	58.4	56	30	30	118 (125)	146 (153)
50	79	20	9	50	60	6	72.4	64	36	36	136 (147)	168 (179)
63	96	20	11	60	74	8	90.4	74	46	46	136 (147)	173 (184)

Female Thread [mm]

Bore size	Z	ZZ
20	71 (79)	92 (100)
25	72 (80)	93 (101)
32	75 (82)	99 (106)
40	83 (90)	111 (118)
50	94 (105)	126 (137)
63	94 (105)	131 (142)

Clevis (D) with Pivot Bracket ø 20 to ø 63

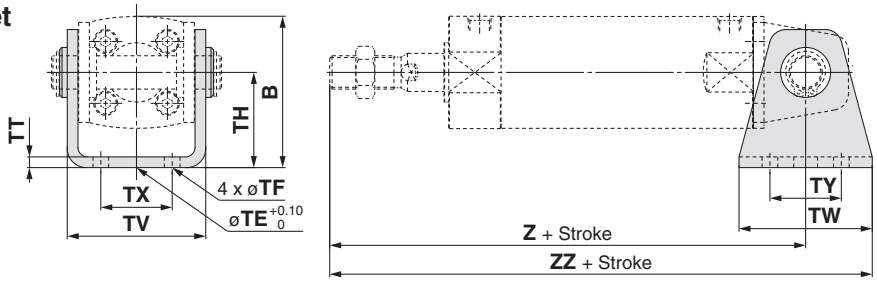

Male Thread [mm]

Bore size	B	TE	TF	TH	TT	TV	TW	TX	TY	Z	ZZ
20	38	10	5.5	25	3.2	35.8	42	16	28	118 (126)	139 (147)
25	45.5	10	5.5	30	3.2	39.8	42	20	28	125 (133)	146 (154)
32	54	10	6.6	35	4.5	49.4	48	22	28	131 (139)	155 (163)
40	63.5	10	6.6	40	4.5	58.4	56	30	30	150 (159)	178 (187)
50	79	20	9	50	6	72.4	64	36	36	173 (185)	205 (217)
63	96	20	11	60	8	90.4	74	46	46	178 (190)	215 (227)

Female Thread [mm]

Bore size	Z	ZZ
20	96 (104)	117 (125)
25	99 (107)	120 (128)
32	105 (113)	129 (137)
40	115 (124)	143 (152)
50	131 (143)	163 (175)
63	136 (148)	173 (185)

Clevis (D) with Pivot Bracket ø 80, ø 100

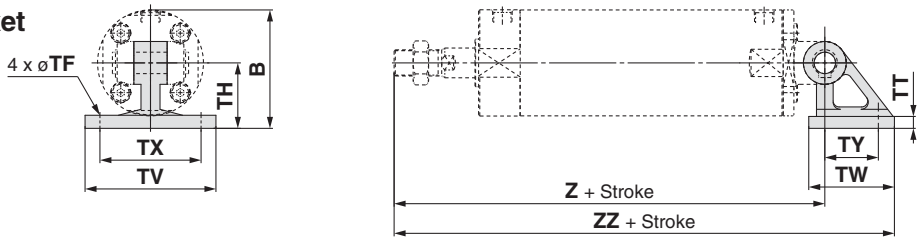

Male Thread [mm]

Bore size	B	TF	TH	TT	TV	TW	TX	TY	Z	ZZ
80	99.5	11	55	11	110	72	85	45	214 (228)	272.5 (286.5)
100	120	13.5	65	12	130	93	100	60	222 (236)	298.5 (312.5)

Female Thread [mm]

Bore size	Z	ZZ
80	162 (176)	220.5 (234.5)
100	173 (187)	249.5 (263.5)

Dimensions of Accessories

Single Knuckle Joint

I-G02, G03
Material: Carbon steel

I-G04, G05, G08, G10
Material: Cast iron

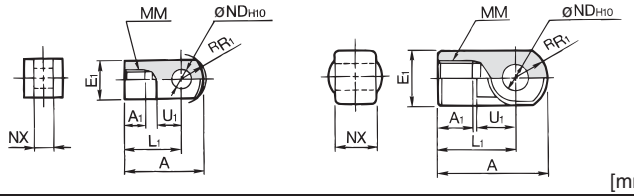

[mm]

Part no.	Applicable bore size [mm]	A	A1	E1	L1	MM	R1	U1	ND H10	NX
I-G02	20	34	8.5	□16	25	M8 x 1.25	10.3	11.5	$8^{+0.058}_{0}$	$8^{-0.2}_{-0.4}$
I-G03	25, 32	41	10.5	□20	30	M10 x 1.25	12.8	14	$10^{+0.058}_{0}$	$10^{-0.2}_{-0.4}$
I-G04	40	42	14	ø 22	30	M14 x 1.5	12	14	$10^{+0.058}_{0}$	$18^{-0.3}_{-0.5}$
I-G05	50, 63	56	18	ø 28	40	M18 x 1.5	16	20	$14^{+0.070}_{0}$	$22^{-0.3}_{-0.5}$
I-G08	80	71	21	ø 38	50	M22 x 1.5	21	27	$18^{+0.070}_{0}$	$28^{-0.3}_{-0.5}$
I-G10	100	79	21	ø 44	55	M26 x 1.5	24	31	$22^{+0.084}_{0}$	$32^{-0.3}_{-0.5}$

Knuckle Pin

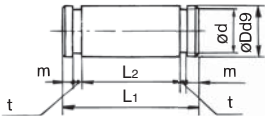

Material: Carbon steel [mm]

Part no.	Applicable bore size [mm]	Dd9	L1	d	L2	m	t	Included retaining ring
IY-G02	20	$8^{-0.040}_{-0.076}$	21	7.6	16.2	1.5	0.9	Type C8 for axis
IY-G03	25, 32	$10^{-0.040}_{-0.076}$	25.6	9.6	20.2	1.55	1.15	Type C10 for axis
IY-G04	40	$10^{-0.040}_{-0.076}$	41.6	9.6	36.2	1.55	1.15	Type C10 for axis
IY-G05	50, 63	$14^{-0.050}_{-0.093}$	50.6	13.4	44.2	2.05	1.15	Type C14 for axis
IY-G08	80	$18^{-0.050}_{-0.093}$	64	17	56.2	2.55	1.35	Type C18 for axis
IY-G10	100	$22^{-0.065}_{-0.117}$	72	21	64.2	2.55	1.35	Type C22 for axis

∗ Retaining rings are included.

Clevis Pin

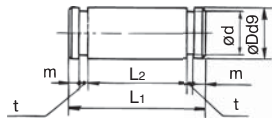

Material: Carbon steel [mm]

Part no.	Applicable bore size [mm]	Dd9	L1	d	L2	m	t	Included retaining ring
CD-G02	20	$8^{-0.040}_{-0.076}$	43.4	7.6	38.6	1.5	0.9	Type C8 for axis
CD-G25	25	$10^{-0.040}_{-0.076}$	48	9.6	42.6	1.55	1.15	Type C10 for axis
CD-G03	32	$12^{-0.050}_{-0.093}$	59.4	11.5	54	1.55	1.15	Type C12 for axis
CD-G04	40	$14^{-0.050}_{-0.093}$	71.4	13.4	65	2.05	1.15	Type C14 for axis
CD-G05	50	$16^{-0.050}_{-0.093}$	86	15.2	79.6	2.05	1.15	Type C16 for axis
CD-G06	63	$18^{-0.050}_{-0.093}$	105.4	17	97.8	2.45	1.35	Type C18 for axis

∗ Retaining rings are included.
∗ A clevis pin and a knuckle pin are common for the bore size ø 80 and ø 100.

Rod End Nut

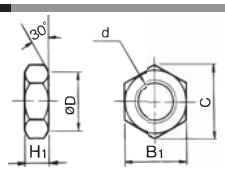

Material: Carbon steel [mm]

Part no.	Applicable bore size [mm]	d	H1	B1	C	D
NT-02	20	M8 x 1.25	5	13	(15)	12.5
NT-03	25, 32	M10 x 1.25	6	17	(19.6)	16.5
NT-G04	40	M14 x 1.5	8	19	(21.9)	18
NT-05	50, 63	M18 x 1.5	11	27	(31.2)	26
NT-08	80	M22 x 1.5	13	32	(37.0)	31
NT-10	100	M26 x 1.5	16	41	(47.3)	39

Double Knuckle Joint

Y-G02, G03
Material: Carbon steel

Y-G04, G05, G08, G10
Material: Cast iron

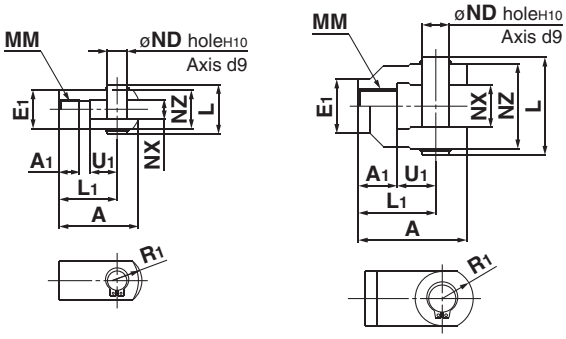

[mm]

Part no.	Applicable bore size [mm]	A	A1	E1	L1	MM	R1	U1	ND	NX	NZ	L	Included pin part no.
Y-G02	20	34	8.5	□16	25	M8 x 1.25	10.3	11.5	8	$8^{+0.4}_{+0.2}$	16	21	IY-G02
Y-G03	25, 32	41	10.5	□20	30	M10 x 1.25	12.8	14	10	$10^{+0.4}_{+0.2}$	20	25.6	IY-G03
Y-G04	40	42	16	ø 22	30	M14 x 1.5	12	14	10	$18^{+0.5}_{+0.3}$	36	41.6	IY-G04
Y-G05	50, 63	56	20	ø 28	40	M18 x 1.5	16	20	14	$22^{+0.5}_{+0.3}$	44	50.6	IY-G05
Y-G08	80	71	23	ø 38	50	M22 x 1.5	21	27	18	$28^{+0.5}_{+0.3}$	56	64	IY-G08
Y-G10	100	79	24	ø 44	55	M26 x 1.5	24	31	22	$32^{+0.5}_{+0.3}$	64	72	IY-G10

∗ A knuckle pin and retaining rings are included.

Pivot Bracket

ø 20 to ø 63
Material: Carbon steel

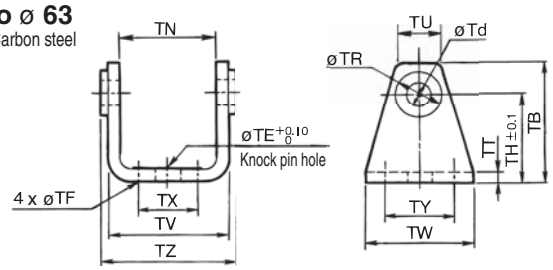

ø 80, ø 100
Material: Cast iron

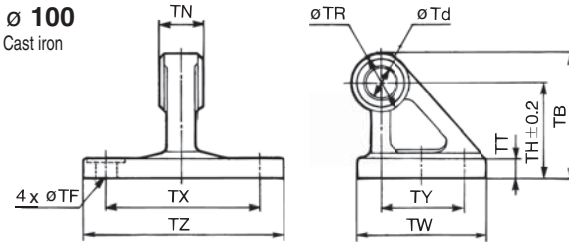

[mm]

Part no.	Applicable bore size [mm]	TB	Td	TE	TF	TH	TN	TR	TT
CG-020-24A	20	36	8	10	5.5	25	(29.3)	13	3.2
CG-025-24A	25	43	10	10	5.5	30	(33.1)	15	3.2
CG-032-24A	32	50	12	10	6.6	35	(40.4)	17	4.5
CG-040-24A	40	58	14	10	6.6	40	(49.2)	21	4.5
CG-050-24A	50	70	16	20	9	50	(60.4)	24	6
CG-063-24A	63	82	18	20	11	60	(74.6)	26	8
CG-080-24A	80	73	18	—	11	55	$28^{-0.1}_{-0.3}$	36	11
CG-100-24A	100	90	22	—	13.5	65	$32^{-0.1}_{-0.3}$	50	12

Part no.	Applicable bore size [mm]	TU	TV	TW	TX	TY	TZ	Applicable pin O.D.
CG-020-24A	20	(18.1)	(35.8)	42	16	28	38.3	$8d9^{-0.040}_{-0.076}$
CG-025-24A	25	(20.7)	(39.8)	42	20	28	42.1	$10d9^{-0.040}_{-0.076}$
CG-032-24A	32	(23.6)	(49.4)	48	22	28	53.8	$12d9^{-0.050}_{-0.093}$
CG-040-24A	40	(27.3)	(58.4)	56	30	30	64.6	$14d9^{-0.050}_{-0.093}$
CG-050-24A	50	(29.7)	(72.4)	64	36	36	79.2	$16d9^{-0.050}_{-0.093}$
CG-063-24A	63	(34.3)	(90.4)	74	46	46	97.2	$18d9^{-0.050}_{-0.093}$
CG-080-24A	80	—	—	72	85	45	110	$18d9^{-0.050}_{-0.093}$
CG-100-24A	100	—	—	93	100	60	130	$22d9^{-0.065}_{-0.117}$

Air Cylinder: Standard Type
Double Acting, Double Rod
Series CG1W
ø 20, ø 25, ø 32, ø 40, ø 50, ø 63, ø 80, ø 100

How to Order

CG1W L N 25 – 100 □ □ Z – □

With auto switch **CDG1W L N 25 – 100 □ □ Z – M9BW □ – □**

With auto switch
(Built-in magnet)

Double acting, Double rod type

Mounting

B	Basic
Z*	Basic (without trunnion mounting female thread)
L	Axial foot
F	Flange
U*	Trunnion

∗ Not available for ø 80 and ø 100.
∗ Mounting bracket is shipped together with the product, but not assembled.
∗ The cylinder for F, L mounting types is Z: Basic (without trunnion mounting female thread).

Type

N	Rubber bumper
A	Air cushion

Bore size

20	20 mm	50	50 mm
25	25 mm	63	63 mm
32	32 mm	80	80 mm
40	40 mm	100	100 mm

Auto switch

—	Without auto switch

∗ For applicable auto switches, refer to the table below.

Number of auto switches

—	2 pcs.
S	1 pc.
n	"n" pcs.

Suffix for cylinder (Rod boot)

—		Without rod boot
One side	J	Nylon tarpaulin
	K	Heat resistant tarpaulin
Both sides	JJ	Nylon tarpaulin
	KK	Heat resistant tarpaulin

Note) In the case of w/rod boot, and a foot bracket or rod flange as a bracket, those parts are to be assembled at the time of shipment.
∗ For female rod end, no rod boot is provided.

Rod end thread

—	Male rod end
F	Female rod end

Cylinder stroke [mm]
Refer to "Standard Strokes" on page 24.

Made to Order
For details, refer to page 24.

Built-in Magnet Cylinder Model

If a built-in magnet cylinder without an auto switch is required, there is no need to enter the symbol for the auto switch.
(Example) CDG1WFA32-100Z

Applicable Auto Switches/Refer to the **Auto Switch Guide** for further information on auto switches.

Type	Special function	Electrical entry	Indicator light	Wiring (Output)	Load voltage DC		Load voltage AC	Auto switch model: Applicable bore size ø 20 to ø 63 Perpendicular	ø 20 to ø 63 In-line	ø 80, ø 100 In-line	Lead wire length [m] 0.5 (—)	1 (M)	3 (L)	5 (Z)	None (N)	Pre-wired connector	Applicable load	
Solid state auto switch	——	Grommet	Yes	3-wire (NPN)	24 V	5 V, 12 V	—	M9NV	M9N	—	●	●	●	○	—	○	IC circuit	Relay, PLC
								—	—	G59	●	—	●	○	—	○		
				3-wire (PNP)				M9PV	M9P	—	●	●	●	○	—	○		
								—	—	G5P	●	—	●	○	—	○		
				2-wire		12 V		M9BV	M9B	—	●	●	●	○	—	○	—	
								—	—	K59	●	—	●	○	—	○		
		Connector						—	H7C	—	●	—	●	●	●	—		
	Diagnostic indication (2-colour indication)	Grommet		3-wire (NPN)		5 V, 12 V		M9NWV	M9NW	—	●	●	●	○	—	○	IC circuit	
								—	—	G59W	●	—	●	○	—	○		
				3-wire (PNP)				M9PWV	M9PW	—	●	●	●	○	—	○		
								—	—	G5PW	●	—	●	○	—	○		
				2-wire		12 V		M9BWV	M9BW	—	●	●	●	○	—	○	—	
								—	—	K59W	●	—	●	○	—	○		
	Water resistant (2-colour indication)			3-wire (NPN)		5 V, 12 V		M9NAV**	M9NA**	—	○	○	●	○	—	○	IC circuit	
				3-wire (PNP)				M9PAV**	M9PA**	—	○	○	●	○	—	○		
				2-wire		12 V		M9BAV**	M9BA**	—	○	○	●	○	—	○	—	
								—	—	G5BA**	—	—	●	○	—	○		
	Diagnostic output (2-colour indication)			4-wire (NPN)		5 V, 12 V		—	H7NF	—	●	—	●	○	—	○	IC circuit	
Reed auto switch	——	Grommet	Yes	3-wire (Equiv. to NPN)	—	5 V	—	A96V	A96	—	●	—	●	—	—	—	IC circuit	—
				2-wire	24 V	12 V	100 V	A93V	A93	—	●	—	●	●	—	—	—	Relay, PLC
			No				100 V or less	A90V	A90	—	●	—	●	—	—	—	IC circuit	
			Yes				100 V, 200 V	—	B54		●	—	●	●	—	—	—	
			No				200 V or less	—	B64		●	—	●	—	—	—		
		Connector	Yes				—	—	C73C	—	●	—	●	●	●	—		
			No				24 V or less	—	C80C	—	●	—	●	●	●	—	IC circuit	
	Diagnostic indication (2-colour indication)	Grommet	Yes			—	—	—	B59W		●	—	●	—	—	—	—	

∗∗ Water resistant type auto switches can be mounted on the above models, but in such case SMC cannot guarantee water resistance. Please consult with SMC regarding water resistant types with the above model numbers.
∗ Lead wire length symbols: 0.5 m····· — (Example) M9NW
1 m····· M (Example) M9NWM
3 m····· L (Example) M9NWL
5 m····· Z (Example) M9NWZ
None····· N (Example) H7CN
∗ Solid state auto switches marked with "○" are produced upon receipt of order.
∗ Since there are other applicable auto switches than listed above, refer to page 74 for details.
∗ For details about auto switches with pre-wired connector, refer to **Auto Switch Guide.**
∗ The D-A9□□/M9□□□ auto switches are shipped together, (but not assembled). (However, only the auto switch mounting brackets are assembled before shipment.)

Symbol

Rubber bumper

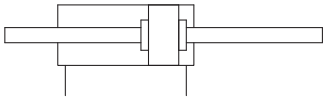

Air cushion

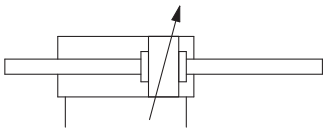

Made to Order
(For details, refer to pages 77 to 93.)

Symbol	Specifications
-XA□	Change of rod end shape
-XB6	Heat resistant cylinder (–10 to 150 °C)*1
-XB7	Cold resistant cylinder (–40 to 70 °C)*2
-XC6	Made of stainless steel
-XC13	Auto switch rail mounting
-XC22	Fluororubber seal*1
-XC37	Larger throttle diameter of connection port
-XC85	Grease for food processing equipment

*1 Cylinders with rubber bumper have no bumper.
*2 Only compatible with cylinders with rubber bumper, but has no bumper.

Rod Boot Material

Symbol	Rod boot material	Maximum operating temperature
J	Nylon tarpaulin	70 °C
K	Heat resistant tarpaulin	110 °C*

* Maximum ambient temperature for the rod boot itself.

Refer to pages 68 to 74 for cylinders with auto switches.

- Auto switch proper mounting position (detection at stroke end) and its mounting height
- Minimum stroke for auto switch mounting
- Auto switch mounting brackets/Part no.
- Operating range
- Cylinder mounting bracket, by stroke/ Auto switch mounting surfaces

Specifications

Bore size [mm]			20	25	32	40	50	63	80	100
Action			Double acting, Double rod							
Lubricant			Not required (Non-lube)							
Fluid			Air							
Proof pressure			1.5 MPa							
Maximum operating pressure			1.0 MPa							
Minimum operating pressure			0.08 MPa							
Ambient and fluid temperature			Without auto switch: –10 °C to 70 °C With auto switch : –10 °C to 60 °C (No freezing)							
Piston speed			50 to 1000 mm/s						50 to 700 mm/s	
Stroke length tolerance			Up to 1000 st $^{+1.4}_{0}$ mm, Up to 1500 st $^{+1.8}_{0}$ mm							
Cushion			Rubber bumper, Air cushion							
Mounting**			Basic, Basic (without trunnion mounting female thread), Axial foot, Flange, Trunnion							
Allowable kinetic energy (J)	**Rubber bumper**	**Male rod end**	0.28	0.41	0.66	1.20	2.00	3.40	5.90	9.90
		Female rod end	0.11	0.18	0.29	0.52	0.91	1.54	2.71	4.54
	Air cushion	**Male rod end**	R: 0.35 H: 0.42	R: 0.56 H: 0.65	0.91	1.80	3.40	4.90	11.80	16.70
		Female rod end	0.11	0.18	0.29	0.52	0.91	1.54	2.71	4.54

* R: Rod side, H: Head side
** Rod trunnion type is not available for ø 80 and ø 100.
Foot and flange types of cylinder sizes from ø 20 to ø 63 do not have trunnion mounting female thread. Operate the cylinder within the allowable kinetic energy.

Accessories

Mounting		Basic	Axial foot	Rod flange	Rod trunnion
Standard	Rod end nut	●	●	●	●
Option	Single knuckle joint	●	●	●	●
	Double knuckle joint** (with pin)	●	●	●	●
	Pivot bracket*	—	—	—	●*
	Rod boot	●	●	●	●

* Not available for ø 80 and ø 100.
** A double knuckle joint pin and retaining rings are shipped together.

Standard Strokes

Bore size [mm]	Standard stroke [mm] Note1)	Maximum manufacturable stroke [mm] Note 2)
20	25, 50, 75, 100, 125, 150, 200	201 to 1500
25	25, 50, 75, 100, 125, 150, 200, 250, 300	301 to 1500
32		
40		
50, 63		
80		
100		

Note 1) Intermediate strokes not listed above are produced upon receipt of order. Manufacture of intermediate strokes at 1 mm intervals is possible. (Spacers are not used.)
Note 2) The maximum manufacturable stroke shows the long stroke.
Note 3) Applicable strokes should be confirmed according to the usage. For details, refer to "Air Cylinders Model Selection". In addition, the products that exceed the standard stroke might not be able to fulfill the specifications due to the deflection etc.

Weights

(kg)

Bore size [mm]		20	25	32	40	50	63	80	100
Basic weight	Basic	0.13	0.22	0.33	0.55	1.02	1.37	2.64	4.09
	Axial foot	0.24	0.35	0.49	0.77	1.50	2.09	3.60	5.84
	Flange	0.21	0.32	0.47	0.75	1.36	1.87	3.35	5.44
	Trunnion	0.14	0.24	0.36	0.60	1.16	1.51	—	—
Pivot bracket		0.08	0.09	0.17	0.25	0.44	0.80	—	—
Single knuckle joint		0.05	0.09	0.09	0.10	0.22	0.22	0.39	0.57
Double knuckle joint (with pin)		0.05	0.09	0.09	0.13	0.26	0.26	0.64	1.31
Additional weight per 50 mm of stroke		0.07	0.10	0.13	0.23	0.34	0.38	0.54	0.77
Additional weight with air cushion		0	0.01	0.04	0	0.01	0.04	0	0.04
Weight reduction for female rod end		–0.02	–0.04	–0.04	–0.10	–0.20	–0.20	–0.38	–0.54

Calculation (Example) **CG1WLN32-100Z**
(Foot, ø 32, 100 stroke)

- Basic weight ····· 0.49 (Foot, ø 32)
- Additional weight ····· 0.13/50 stroke
- Air cylinder stroke····· 100 stroke

0.49 x 0.13 x 100/50 = **0.75 kg**

⚠ Precautions

Be sure to read this before handling. Refer to the back cover for Safety Instructions. For Actuator and Auto Switch Precautions, refer to "Handling Precautions for SMC Products" and the Operation Manual on SMC website, http://www.smc.eu

Refer to page 10 for Handling and Disassembly/Replacement.

Mounting Brackets/Part No.

Mounting bracket	Order q'ty.	Bore size [mm]								Contents
		20	25	32	40	50	63	80	100	
Axial foot	2 Note)	CG-L020	CG-L025	CG-L032	CG-L040	CG-L050	CG-L063	CG-L080	CG-L100	2 foots, 8 mounting bolts
Flange	1	CG-F020	CG-F025	CG-F032	CG-F040	CG-F050	CG-F063	CG-F080	CG-F100	1 flange, 4 mounting bolts
Trunnion pin	1	CG-T020	CG-T025	CG-T032	CG-T040	CG-T050	CG-T063	—	—	2 trunnion pins, 2 trunnion bolts, 2 flat washers
Pivot bracket	1	CG-020-24A	CG-025-24A	CG-032-24A	CG-040-24A	CG-050-24A	CG-063-24A	—	—	1 pivot bracket

Note) Order two foots per cylinder.

Construction

With rubber bumper

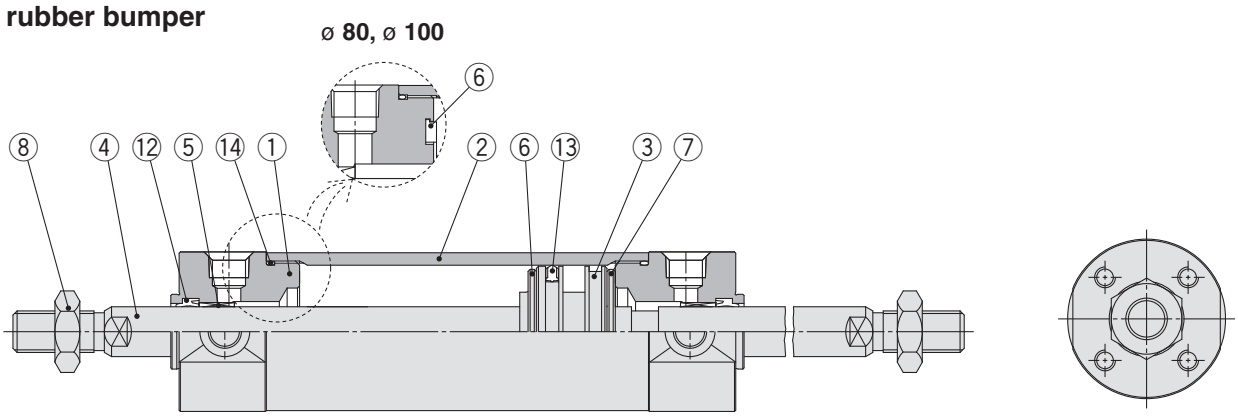

With air cushion

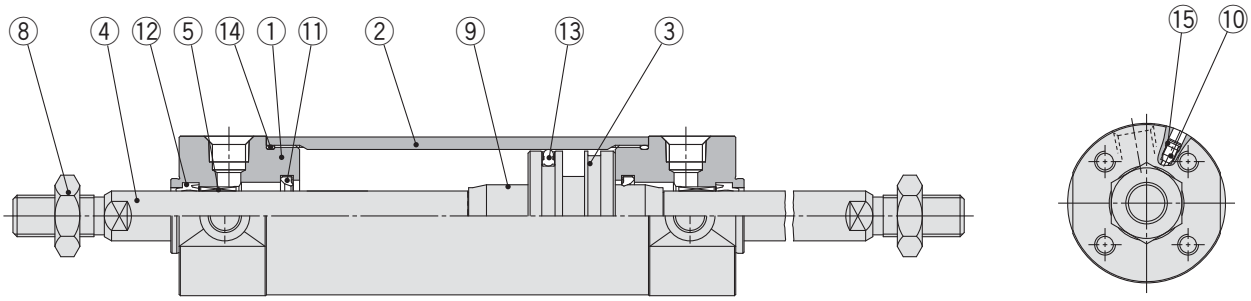

Component Parts

No.	Description		Material	Note
1	**Rod cover**		Aluminium alloy	Hard anodised
2	**Cylinder tube**		Aluminium alloy	Hard anodised
3	**Piston**		Aluminium alloy	
4	**Piston rod**		Stainless steel	For ø 20 or ø 25 with built-in magnet
			Carbon steel*	Hard chrome plating*
5	**Bushing**		Bearing alloy	
6	**Bumper**		Resin	ø 32 or larger is common.
7	**Bumper**		Resin	
8	**Rod end nut**		Carbon steel	Zinc chromated
9	**Cushion ring**		Aluminium alloy	
10	**Cushion valve**	ø 40 or smaller	Carbon steel	Electroless nickel plating
		ø 50 or larger	Steel wire	Zinc chromated
11	**Cushion seal**		Urethane	
12	**Rod seal**		NBR	
13	**Piston seal**		NBR	
14	**Tube gasket**		NBR	
15	**Valve seal**		NBR	

Note) For cylinders with auto switches, the magnet is installed in the piston.
∗ The material for ø 20, ø 25 cylinders with auto switches is made of stainless steel.

Replacement Parts: Seal Kit

Bore size [mm]	Kit no.	Contents
20	CG1WN20Z-PS	Set of the nos. ⑫, ⑬, ⑭
25	CG1WN25Z-PS	
32	CG1WN32Z-PS	
40	CG1WN40Z-PS	

Note) Refer to the Specific Product Precautions on page 10 for Disassembly/Replacement. Order with the kit number according to the bore size.
∗ The seal kit includes a grease pack (10 g).
Order with the following part number when only the grease pack is needed.
Grease pack part number: GR-S-010 (10 g)

Basic with Rubber Bumper: CG1WBN

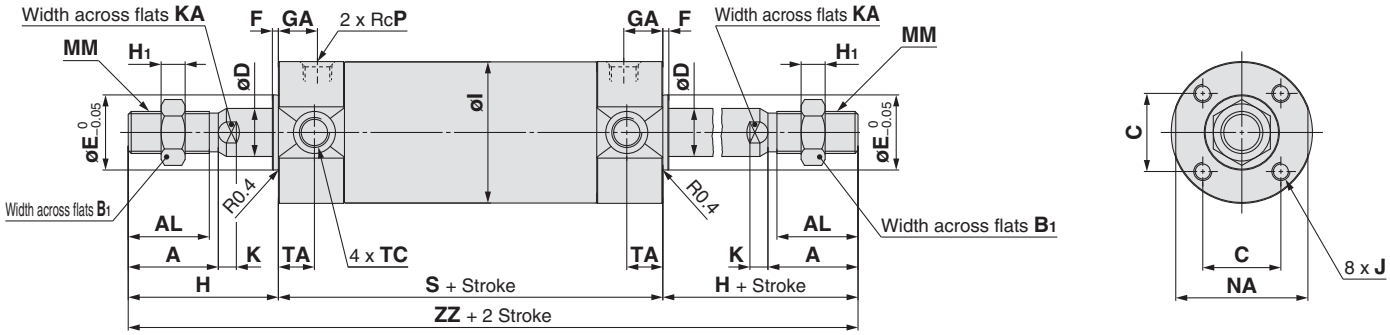

<With rod boot on one side>

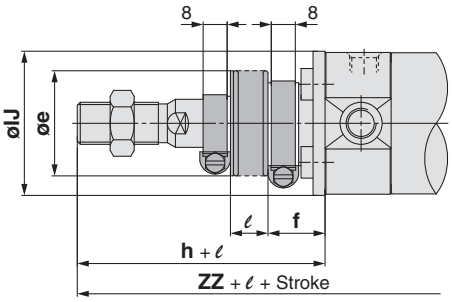

Female rod end

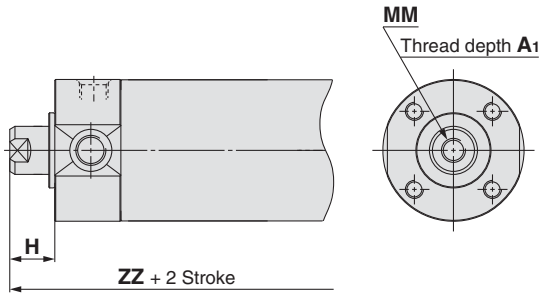

<With rod boot on both sides>

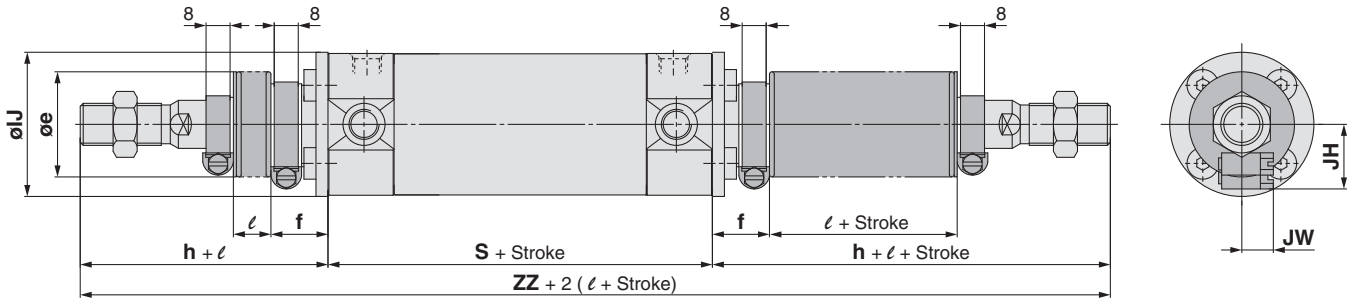

[mm]

Bore size	Stroke range		A	AL	B1	C	D	E	F	GA	H1	I	J	K	KA	MM	NA	P	S
	Standard	Long stroke																	
20	Up to 200	201 to 1500	18	15.5	13	14	8	12	2	12	5	26	M4 x 0.7 depth 7	5	6	M8 x 1.25	24	1/8	77
25	Up to 300	301 to 1500	22	19.5	17	16.5	10	14	2	12	6	31	M5 x 0.8 depth 7.5	5.5	8	M10 x 1.25	29	1/8	77
32	Up to 300	301 to 1500	22	19.5	17	20	12	18	2	12	6	38	M5 x 0.8 depth 8	5.5	10	M10 x 1.25	35.5	1/8	79
40	Up to 300	301 to 1500	30	27	19	26	16	25	2	13	8	47	M6 x 1 depth 12	6	14	M14 x 1.5	44	1/8	87
50	Up to 300	301 to 1500	35	32	27	32	20	30	2	14	11	58	M8 x 1.25 depth 16	7	18	M18 x 1.5	55	1/4	102
63	Up to 300	301 to 1500	35	32	27	38	20	32	2	14	11	72	M10 x 1.5 depth 16	7	18	M18 x 1.5	69	1/4	102
80	Up to 300	301 to 1500	40	37	32	50	25	40	3	20	13	89	M10 x 1.5 depth 22	10	22	M22 x 1.5	86	3/8	122
100	Up to 300	301 to 1500	40	37	41	60	30	50	3	20	16	110	M12 x 1.75 depth 22	10	26	M26 x 1.5	106	1/2	122

Bore size	TA	TC**	Without rod boot		With rod boot on one side*								With rod boot* on both sides
			H	ZZ	e	f	h	lJ	JH (Reference)	JW (Reference)	ℓ	ZZ	ZZ
20	11	M5 x 0.8	35	147	30	18	55	27	15.5	10.5	1/4 stroke	167	187
25	11	M6 x 0.75	40	157	30	19	62	32	16.5	10.5		179	201
32	11	M8 x 1.0	40	159	35	19	62	38	18.5	10.5		181	203
40	12	M10 x 1.25	50	187	35	19	70	48	21.5	10.5		207	227
50	13	M12 x 1.25	58	218	40	19	78	59	24	10.5		238	258
63	13	M14 x 1.5	58	218	40	20	78	72	24	10.5		238	258
80	—	—	71	264	52	10	80	59	—	—		273	282
100	—	—	71	264	62	7	80	71	—	—		273	282

Female Rod End

[mm]

Bore size	A1	H	MM	ZZ
20	8	13	M4 x 0.7	103
25	8	14	M5 x 0.8	105
32	12	14	M6 x 1	107
40	13	15	M8 x 1.25	117
50	18	16	M10 x 1.5	134
63	18	16	M10 x 1.5	134
80	21	19	M14 x 1.5	160
100	25	22	M16 x 1.5	166

∗ The minimum stroke with rod boot is 20 mm.
∗∗ Cylinder sizes ø 80 and ø 100 do not have trunnion mounting female thread on the width across flats NA.

Basic with Air Cushion: CG1WBA

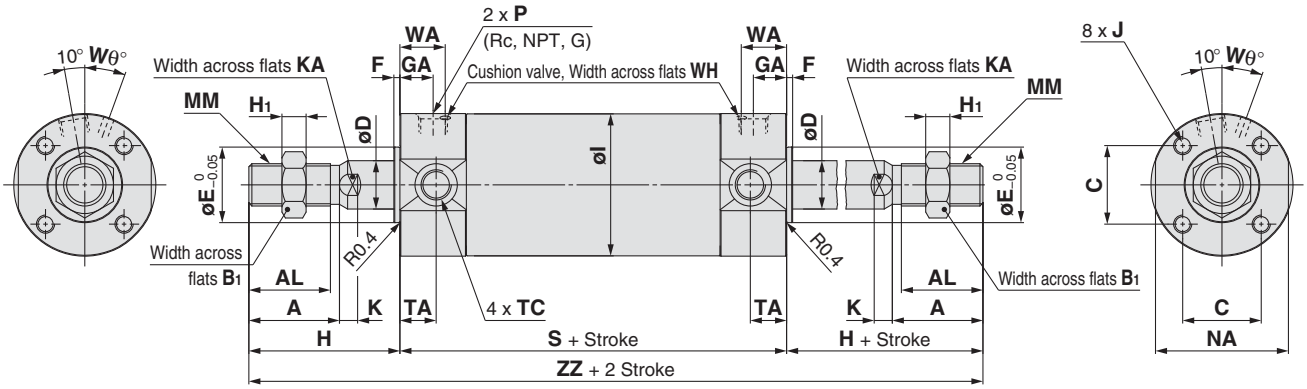

★ For the one with rod boot, refer to w/rubber bumper. [mm]

Bore size	Stroke range		A	AL	B1	C	D	E	F	GA	H	H1	I	J	K	KA
	Standard	Long stroke														
20	Up to 200	201 to 1500	18	15.5	13	14	8	12	2	12	35	5	26	M4 x 0.7 depth 7	5	6
25	Up to 300	301 to 1500	22	19.5	17	16.5	10	14	2	12.5	40	6	31	M5 x 0.8 depth 7.5	5.5	8
32	Up to 300	301 to 1500	22	19.5	17	20	12	18	2	12	40	6	38	M5 x 0.8 depth 8	5.5	10
40	Up to 300	301 to 1500	30	27	19	26	16	25	2	13	50	8	47	M6 x 1 depth 12	6	14
50	Up to 300	301 to 1500	35	32	27	32	20	30	2	14	58	11	58	M8 x 1.25 depth 16	7	18
63	Up to 300	301 to 1500	35	32	27	38	20	32	2	14	58	11	72	M10 x 1.5 depth 16	7	18
80	Up to 300	301 to 1500	40	37	32	50	25	40	3	20	71	13	89	M10 x 1.5 depth 22	10	22
100	Up to 300	301 to 1500	40	37	41	60	30	50	3	20	71	16	110	M12 x 1.75 depth 22	10	26

Bore size	MM	NA	P	S	TA	TC**	ZZ	WA	Wθ	WH
20	M8 x 1.25	24	M5 x 0.8	77	11	M5 x 0.8	147	16	25°	1.5
25	M10 x 1.25	29	M5 x 0.8	77	11	M6 x 0.75	157	16	25°	1.5
32	M10 x 1.25	35.5	Rc1/8	79	11	M8 x 1.0	159	16	25°	1.5
40	M14 x 1.5	44	Rc1/8	87	12	M10 x 1.25	187	17	20°	1.5
50	M18 x 1.5	55	Rc1/4	102	13	M12 x 1.25	218	18	20°	3
63	M18 x 1.5	69	Rc1/4	102	13	M14 x 1.5	218	18	20°	3
80	M22 x 1.5	86	Rc3/8	122	—	—	264	24	20°	4
100	M26 x 1.5	106	Rc1/2	122	—	—	264	24	20°	4

∗ Refer to w/rubber bumper for the female rod end.

∗ For mounting brackets, refer to page 22.
∗∗ Cylinder sizes ø 80 and ø 100 do not have trunnion mounting female thread on the width across flats NA.

With Mounting Bracket

Axial foot: CG1WL□

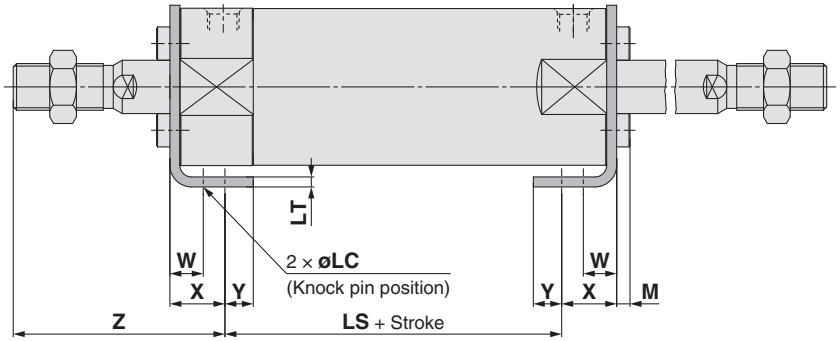

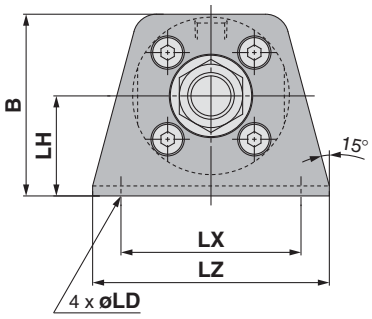

[mm]

Bore size	Stroke range	B	LC	LD	LH	LS	LT	LX	LZ	M	W	X	Y	Z
20	Up to 1500	34	4	6	20	53	3	32	44	3	10	15	7	47
25	Up to 1500	38.5	4	6	22	53	3	36	49	3.5	10	15	7	52
32	Up to 1500	45	4	7	25	53	3	44	58	3.5	10	16	8	53
40	Up to 1500	54.5	4	7	30	60	3	54	71	4	10	16.5	8.5	63.5
50	Up to 1500	70.5	5	10	40	67	4.5	66	86	5	17.5	22	11	75.5
63	Up to 1500	82.5	5	12	45	67	4.5	82	106	5	17.5	22	13	75.5
80	Up to 1500	101	6	11	55	74	4.5	100	125	5	20	28.5	14	95
100	Up to 1500	121	6	14	65	74	6	120	150	7	20	30	16	95

∗ Other dimensions are the same as basic type.

Flange: CG1WF□

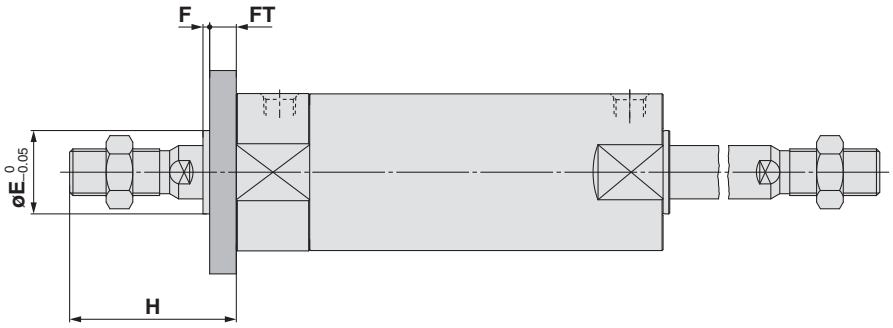

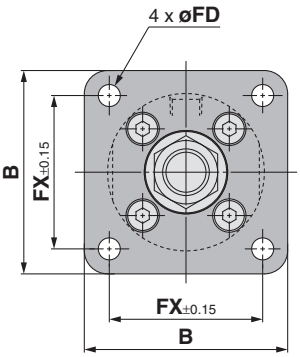

[mm]

Bore size	Stroke range	B	E	F	FX	FD	FT	H
20	Up to 1500	40	12	2	28	5.5	6	35
25	Up to 1500	44	14	2	32	5.5	7	40
32	Up to 1500	53	18	2	38	6.6	7	40
40	Up to 1500	61	25	2	46	6.6	8	50
50	Up to 1500	76	30	2	58	9	9	58
63	Up to 1500	92	32	2	70	11	9	58
80	Up to 1500	104	40	3	82	11	11	71
100	Up to 1500	128	50	3	100	14	14	71

∗ End boss is machined on the flange for ø E.
∗ Other dimensions are the same as basic type.

With Mounting Bracket

Trunnion: CG1WU□

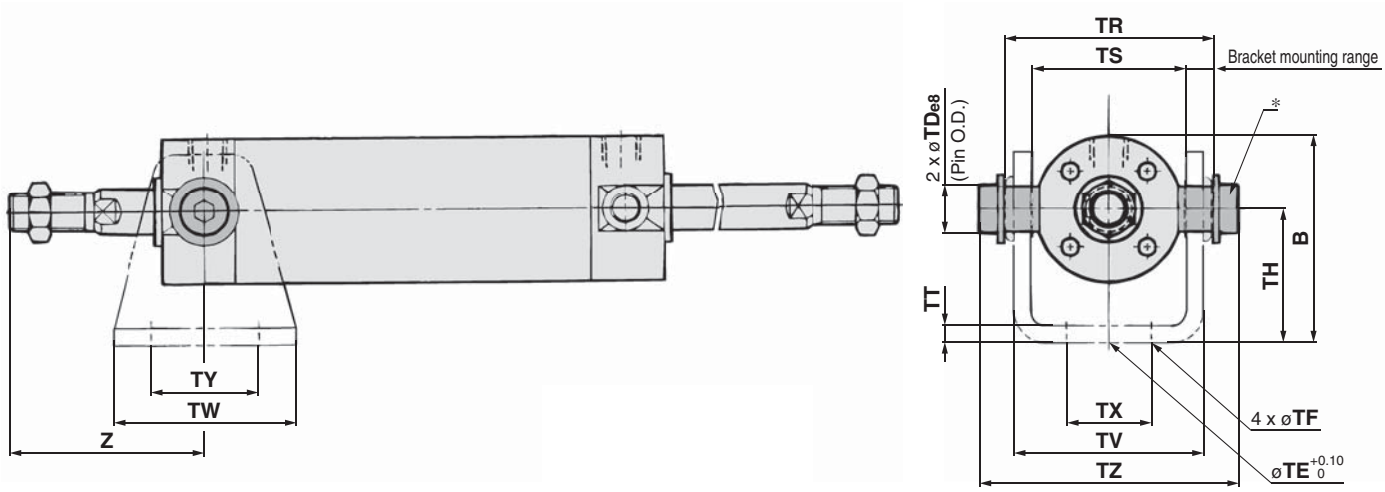

[mm]

Bore size	Stroke range	B	TDe8	TE	TF	TH	TR	TS	TT	TV	TW	TX	TY	TZ	Z	
															Without rod boot	With rod boot
20	Up to 1500	38	$8^{-0.025}_{-0.047}$	10	5.5	25	39	28	3.2	(35.8)	42	16	28	47.6	46	66 + ℓ
25	Up to 1500	45.5	$10^{-0.025}_{-0.047}$	10	5.5	30	43	33	3.2	(39.8)	42	20	28	53	51	73 + ℓ
32	Up to 1500	54	$12^{-0.032}_{-0.059}$	10	6.6	35	54.5	40	4.5	(49.4)	48	22	28	67.7	51	73 + ℓ
40	Up to 1500	63.5	$14^{-0.032}_{-0.059}$	10	6.6	40	65.5	49	4.5	(58.4)	56	30	30	78.7	62	82 + ℓ
50	Up to 1500	79	$16^{-0.032}_{-0.059}$	20	9	50	80	60	6	(72.4)	64	36	36	98.6	71	91 + ℓ
63	Up to 1500	96	$18^{-0.032}_{-0.059}$	20	11	60	98	74	8	(90.4)	74	46	46	119.2	71	91 + ℓ

∗ Constructed of a pin, flat washer and hexagon socket head cap bolt.
∗ Other dimensions are the same as basic type.

Air Cylinder: Standard Type
Single Acting, Spring Return/Extend

Series CG1

ø 20, ø 25, ø 32, ø 40

How to Order

Cylinder stroke [mm]
Refer to "Standard Strokes" on page 32.

Action

S	Single acting, Spring return
T	Single acting, Spring extend

Pivot bracket

—	None
N	Pivot bracket is shipped together with the product.

∗ Only for D, U, T mounting types
∗ Pivot bracket is shipped together with the product, but not assembled.

Type

N	Rubber bumper

CG1 B N 25 – 100 S □ Z – □ □ – □

With auto switch CDG1 B N 25 – 100 S □ Z – □ □ – M9BW □ – □

With auto switch
(Built-in magnet)

B	Basic
Z	Basic (without trunnion mounting female thread)
L	Axial foot
F	Rod flange

Mounting

G	Head flange
U	Rod trunnion
T	Head trunnion
D	Clevis

∗ Mounting bracket is shipped together with the product, but not assembled.
∗ The cylinder for F, G, L, D mounting types is Z: Basic (without trunnion mounting female thread).

Bore size

20	20 mm
25	25 mm
32	32 mm
40	40 mm

Rod end thread

—	Male rod end
F	Female rod end

Rod end bracket

—	None
V	Single knuckle joint
W	Double knuckle joint

∗ No bracket is provided for the female rod end.
∗ Rod end bracket is shipped together with the product, but not assembled.
∗ A knuckle joint pin is not provided with the single knuckle joint.

Auto switch

—	Without auto switch

∗ For applicable auto switches, refer to the table below.

Number of auto switches

—	2 pcs.
S	1 pc.
n	"n" pcs.

Made to Order
For details, refer to page 32.

Built-in Magnet Cylinder Model

If a built-in magnet cylinder without an auto switch is required, there is no need to enter the symbol for the auto switch.
(Example) CDG1FN32-100TZ

Applicable Auto Switches/Refer to the **Auto Switches Guide** for further information on auto switches.

Type	Special function	Electrical entry	Indicator light	Wiring (Output)	Load voltage DC		Load voltage AC	Auto switch model: Applicable bore size ø 20 to ø 40 Perpendicular	In-line	Lead wire length [m] 0.5 (—)	1 (M)	3 (L)	5 (Z)	None (N)	Pre-wired connector	Applicable load	
Solid state auto switch	——	Grommet	Yes	3-wire (NPN)	24 V	5 V, 12 V	—	M9NV	M9N	●	●	●	○	—	○	IC circuit	Relay, PLC
				3-wire (PNP)				M9PV	M9P	●	●	●	○	—	○		
				2-wire		12 V		M9BV	M9B	●	●	●	○	—	○	—	
		Connector						—	H7C	●	—	●	●	●	—		
	Diagnostic indication (2-colour indication)	Grommet		3-wire (NPN)		5 V, 12 V		M9NWV	M9NW	●	●	●	○	—	○	IC circuit	
				3-wire (PNP)				M9PWV	M9PW	●	●	●	○	—	○		
				2-wire		12 V		M9BWV	M9BW	●	●	●	○	—	○	—	
	Water resistant (2-colour indication)			3-wire (NPN)		5 V, 12 V		M9NAV**	M9NA**	○	○	●	○	—	○	IC circuit	
				3-wire (PNP)				M9PAV**	M9PA**	○	○	●	○	—	○		
				2-wire		12 V		M9BAV**	M9BA**	○	○	●	○	—	○	—	
	Diagnostic output (2-colour indication)			4-wire (NPN)		5 V, 12 V		—	H7NF	●	—	●	○	—	○	IC circuit	
Reed auto switch	——	Grommet	Yes	3-wire (Equiv. to NPN)	—	5 V	—	A96V	A96	●	—	●	—	—	—	IC circuit	—
			No	2-wire	24 V	12 V	100 V	A93V	A93	●	—	●	●	—	—	—	Relay, PLC
							100 V or less	A90V	A90	●	—	●	—	—	—	IC circuit	
			Yes				100 V, 200 V	—	B54	●	—	●	●	—	—	—	
			No				200 V or less	—	B64	●	—	●	—	—	—		
		Connector	Yes				—	—	C73C	●	—	●	●	●	—		
			No				24 V or less	—	C80C	●	—	●	●	●	—	IC circuit	
	Diagnostic indication (2-colour indication)	Grommet	Yes			—	—	—	B59W	●	—	●	—	—	—	—	

∗∗ Water resistant type auto switches can be mounted on the above models, but in such case SMC cannot guarantee water resistance. Please consult with SMC regarding water resistant types with the above model numbers.

∗ Lead wire length symbols: 0.5 m····· — (Example) M9NW
1 m····· M (Example) M9NWM
3 m····· L (Example) M9NWL
5 m····· Z (Example) M9NWZ
None····· N (Example) H7CN

∗ Solid state auto switches marked with "○" are produced upon receipt of order.

∗ Since there are other applicable auto switches than listed above, refer to page 74 for details.
∗ For details about auto switches with pre-wired connector, refer to the **Auto Switches Guide**.
∗ The D-A9□□/M9□□□ auto switches are shipped together, (but not assembled). (However, only the auto switch mounting brackets are assembled before shipment.)

Symbol

Spring return, Rubber bumper

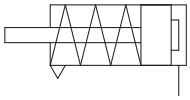

Spring extend, Rubber bumper

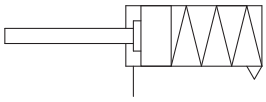

Made to Order
(For details, refer to pages 77 to 93.)

Symbol	Specifications
-XC6	Made of stainless steel*1
-XC20	Head cover axial port*2
-XC27	Double clevis and double knuckle joint pins made of stainless steel
-XC29	Double knuckle joint with spring pin*1
-XC85	Grease for food processing equipment

*1 Applicable only to single acting, spring return type. For single acting, spring extend type, please contact SMC.
*2 Only compatible with cylinders with rubber bumper.

Refer to pages 68 to 74 for cylinders with auto switches.

- Auto switch proper mounting position (detection at stroke end) and its mounting height
- Minimum stroke for auto switch mounting
- Auto switch mounting brackets/Part no.
- Operating range
- Cylinder mounting bracket, by stroke/ Auto switch mounting surfaces

⚠ Precautions

Be sure to read this before handling. Refer to the back cover for Safety Instructions. For Actuator and Auto Switch Precautions, refer to "Handling Precautions for SMC Products" and the Operation Manual on SMC website, http://www.smc.eu

Refer to page 10 for Handling and Disassembly/ Replacement.

Specifications

Bore size [mm]	20	25	32	40	20	25	32	40
Action	Single acting, Spring return				Single acting, Spring extend			
Lubricant	Not required (Non-lube)							
Fluid	Air							
Proof pressure	1.5 MPa							
Maximum operating pressure	1.0 MPa							
Minimum operating pressure	0.18 MPa				0.23 MPa			
Ambient and fluid temperature	Without auto switch: –10 °C to 70 °C With auto switch : –10 °C to 60 °C (No freezing)							
Piston speed	50 to 1000 mm/s							
Stroke length tolerance	Up to 200 st $^{+1.4}_{0}$ mm							
Cushion	Rubber bumper							
Mounting	Basic, Basic (without trunnion mounting female thread), Axial foot, Rod flange, Head flange, Rod trunnion, Head trunnion, Clevis (used for changing the port location by 90°)							

Accessories

Mounting		Basic	Axial foot	Rod flange	Head flange	Rod trunnion	Head trunnion	Clevis
Standard	Rod end nut	●	●	●	●	●	●	●
	Clevis pin	—	—	—	—	—	—	●
Option	Single knuckle joint	●	●	●	●	●	●	●
	Double knuckle joint* (with pin)	●	●	●	●	●	●	●
	Pivot bracket	—	—	—	—	●	●	●

* A double knuckle joint pin and retaining rings are shipped together.

Standard Strokes

[mm]

Bore size	Standard stroke Note1)
20	25, 50, 75, 100, 125
25, 32, 40	25, 50, 75, 100, 125, 150, 200

Note 1) Manufacture of intermediate strokes at 1 mm intervals is possible. (Spacers are not used.)
Note 2) Applicable strokes should be confirmed according to the usage. For details, refer to "Air Cylinders Model Selection". In addition, the products that exceed the standard stroke might not be able to fulfill the specifications due to the deflection etc.

Theoretical Output

Consult SMC

Spring Reaction Force

Consult SMC

Mounting Brackets/Part No.

Mounting bracket	Order q'ty.	Bore size [mm] 20	25	32	40	Contents
Axial foot	2 Note)	CG-L020	CG-L025	CG-L032	CG-L040	2 foots, 8 mounting bolts
Flange	1	CG-F020	CG-F025	CG-F032	CG-F040	1 flange, 4 mounting bolts
Trunnion pin	1	CG-T020	CG-T025	CG-T032	CG-T040	2 trunnion pins, 2 trunnion bolts, 2 flat washers
Clevis	1	CG-D020	CG-D025	CG-D032	CG-D040	1 clevis, 4 mounting bolts, 1 clevis pin, 2 retaining rings
Pivot bracket	1	CG-020-24A	CG-025-24A	CG-032-24A	CG-040-24A	1 pivot bracket

Note) Order two foots per cylinder.

Ordering Example of Cylinder Assembly

Cylinder model: CDG1DN20-100Z-NW-M9BW

Mounting **D: Clevis**
Pivot bracket **N: Yes**
Rod end bracket **W: Double knuckle joint**
Auto switch D-M9BW: 2 pcs.

∗Pivot bracket, double knuckle joint and auto switch are shipped together with the product, but not assembled.

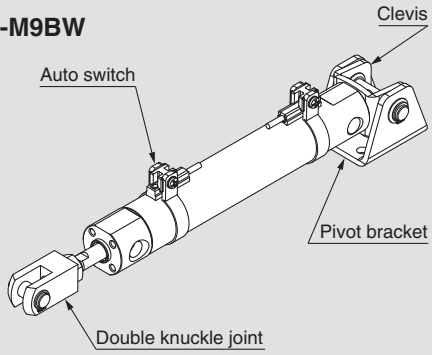

Weights

Spring return [kg]

Bore size [mm]		20	25	32	40
Basic weight	25 st	0.17	0.27	0.40	0.63
	50 st	0.19	0.30	0.45	0.71
	75 st	0.26	0.40	0.58	0.91
	100 st	0.28	0.43	0.62	0.99
	125 st	0.35	0.53	0.76	1.20
	150 st	—	0.56	0.81	1.28
	200 st	—	0.69	0.98	1.56
Mounting bracket weight	Axial foot	0.11	0.13	0.16	0.22
	Flange	0.08	0.10	0.14	0.20
	Trunnion	0.01	0.02	0.03	0.05
	Clevis	0.05	0.08	0.15	0.23
Accessories	Pivot bracket	0.08	0.09	0.17	0.25
	Single knuckle joint	0.05	0.09	0.09	0.10
	Double knuckle joint (with pin)	0.05	0.09	0.09	0.13
Weight reduction for female rod end		–0.01	–0.02	–0.02	–0.05

Calculation (Example) **CG1LN20-100SZ** (Foot, ø 20, 100 stroke)
- Basic weight·····0.28 kg (ø 20)
- Mounting bracket weight····· 0.11 kg (Foot)

0.28 + 0.11 = **0.39 kg**

Spring extend [kg]

Bore size [mm]		20	25	32	40
Basic weight	25 st	0.16	0.25	0.38	0.59
	50 st	0.18	0.28	0.43	0.67
	75 st	0.24	0.37	0.54	0.83
	100 st	0.26	0.40	0.58	0.91
	125 st	0.32	0.48	0.69	1.08
	150 st	—	0.50	0.72	1.12
	200 st	—	0.63	0.89	1.40
Mounting bracket weight	Axial foot	0.11	0.13	0.16	0.22
	Flange	0.08	0.10	0.14	0.20
	Trunnion	0.01	0.02	0.03	0.05
	Clevis	0.05	0.08	0.15	0.23
Accessories	Pivot bracket	0.08	0.09	0.17	0.25
	Single knuckle joint	0.05	0.09	0.09	0.10
	Double knuckle joint (with pin)	0.05	0.09	0.09	0.13
Weight reduction for female rod end		–0.01	–0.02	–0.02	–0.05

Calculation (Example) **CG1LN20-100TZ** (Foot, ø 20, 100 stroke)
- Basic weight·····0.26 kg (ø 20)
- Mounting bracket weight·····0.11 kg (Foot)

0.26 + 0.11 = **0.37 kg**

Construction

Single acting, Spring return

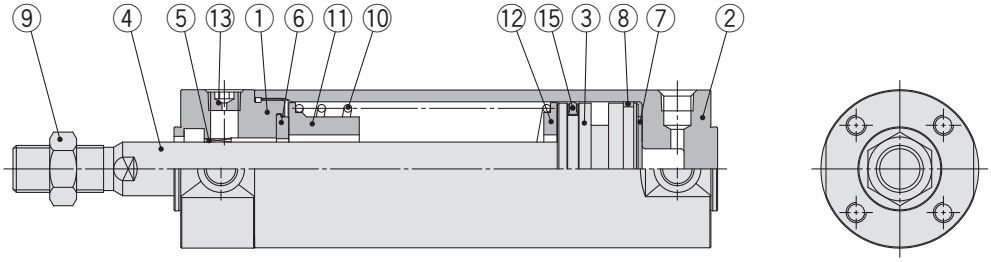

Single acting, Spring extend

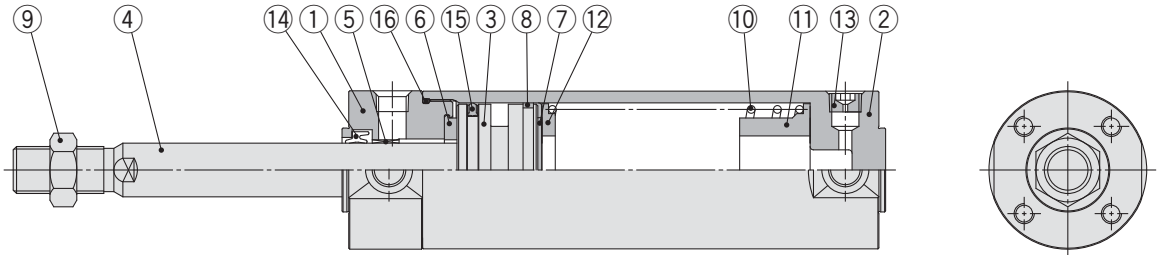

Component Parts

No.	Description	Material	Note
1	**Rod cover**	Aluminium alloy	Hard anodised
2	**Tube cover**	Aluminium alloy	Hard anodised
3	**Piston**	Aluminium alloy	
4	**Piston rod**	Stainless steel	For ø 20 or ø 25 with built-in magnet
		Carbon steel*	Hard chrome plating*
5	**Bushing**	Bearing alloy	
6	**Bumper**	Resin	ø 32 or larger is common.
7	**Bumper**	Resin	
8	**Wear ring**	Resin	
9	**Rod end nut**	Carbon steel	Zinc chromated
10	**Return spring**	Steel wire	Zinc chromated
11	**Spring guide**	Aluminium alloy	
12	**Spring seat**	Aluminium alloy	
13	**Plug with breathing hole**	Alloy steel	Black zinc chromated
14	**Rod seal**	NBR	
15	**Piston seal**	NBR	
16	**Tube gasket**	NBR	

Note) For cylinders with auto switches, the magnet is installed in the piston.
* The material for ø 20, ø 25 cylinders with auto switches is made of stainless steel.

Replacement Part: Seal

● **For single acting, spring return**

No.	Description	Material	Part no.			
			20	**25**	**32**	**40**
15	**Piston seal**	NBR	CG1N20-S-PS	CG1N25-S-PS	CG1N32-S-PS	CG1N40-S-PS

● **For single acting, spring extend**

Replacement parts/Seal kits are the same as standard type, double acting, single rod (with rubber bumper). Refer to page 11.

Note) Refer to the Specific Product Precautions on page 10 for Disassembly/Replacement. Order with the kit number according to the bore size.
* The seal kit includes a grease pack (10 g).
Order with the following part number when only the grease pack is needed.
Grease pack part number: GR-S-010 (10 g)

Basic

Spring return: CG1BN

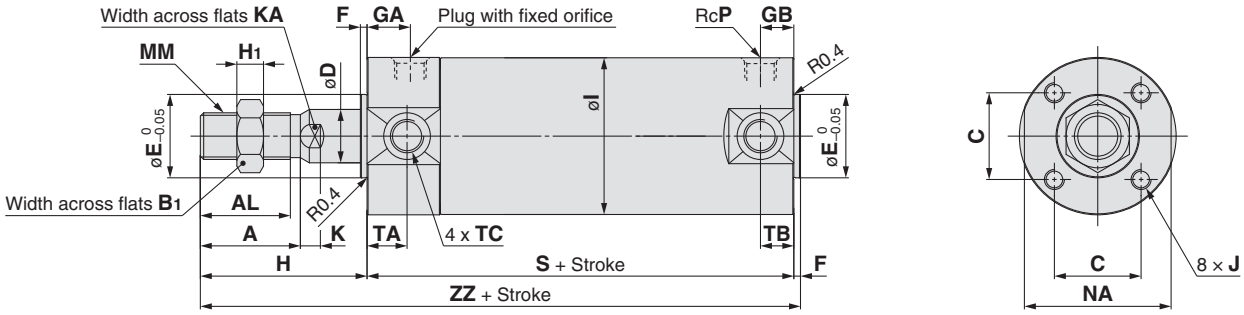

Spring extend: CG1BN

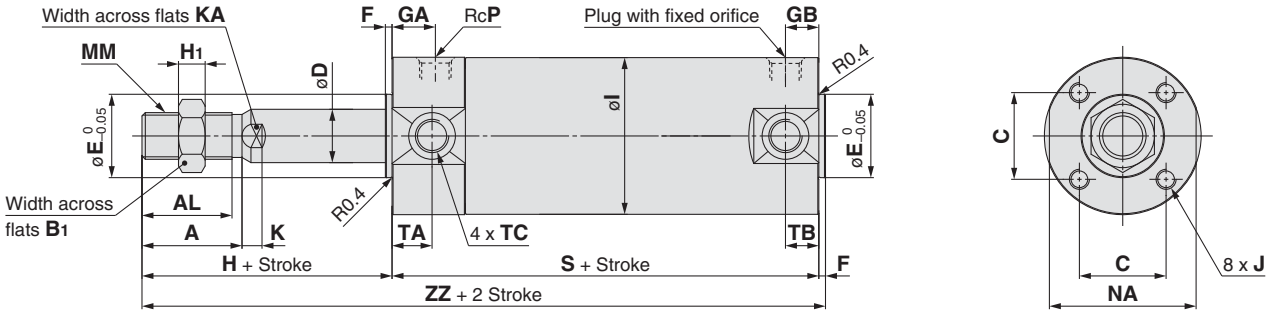

Female rod end

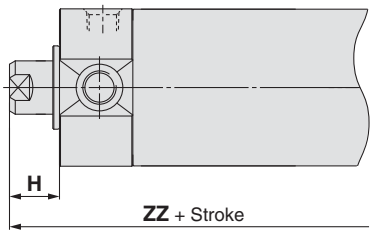

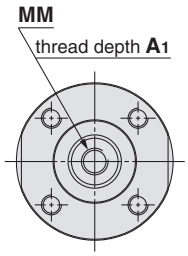

[mm]

Bore size	Stroke range	A	AL	B1	C	D	E	F	GA	GB	H	H1	I	J	K	KA	MM	NA	P
20	Up to 125	18	15.5	13	14	8	12	2	12	10	35	5	26	M4 x 0.7 depth 7	5	6	M8 x 1.25	24	1/8
25	Up to 200	22	19.5	17	16.5	10	14	2	12	10	40	6	31	M5 x 0.8 depth 7.5	5.5	8	M10 x 1.25	29	1/8
32	Up to 200	22	19.5	17	20	12	18	2	12	10	40	6	38	M5 x 0.8 depth 8	5.5	10	M10 x 1.25	35.5	1/8
40	Up to 200	30	27	19	26	16	25	2	13	10	50	8	47	M6 x 1 depth 12	6	14	M14 x 1.5	44	1/8

Bore size	TA	TB	TC	1 to 50 st		51 to 100 st		101 to 125 st		126 to 200 st	
				S	ZZ	S	ZZ	S	ZZ	S	ZZ
20	11	11	M5 x 0.8	94	131	119	156	144	181	—	—
25	11	11	M6 x 0.75	94	136	119	161	144	186	169	211
32	11	10	M8 x 1.0	96	138	121	163	146	188	171	213
40	12	10	M10 x 1.25	103	155	128	180	153	205	178	230

Female Rod End

[mm]

Bore size	A1	H	MM	1 to 50 st	51 to 100 st	101 to 125 st	126 to 200 st
				ZZ	ZZ	ZZ	ZZ
20	8	13	M4 x 0.7	109	134	159	—
25	8	14	M5 x 0.8	110	135	160	185
32	12	14	M6 x 1	112	137	162	187
40	13	15	M8 x 1.25	120	145	170	195

With Mounting Bracket

(Note) The drawings below show the single acting/spring return type.
The rod is in retracted state for spring extend type.

Axial foot: CG1LN

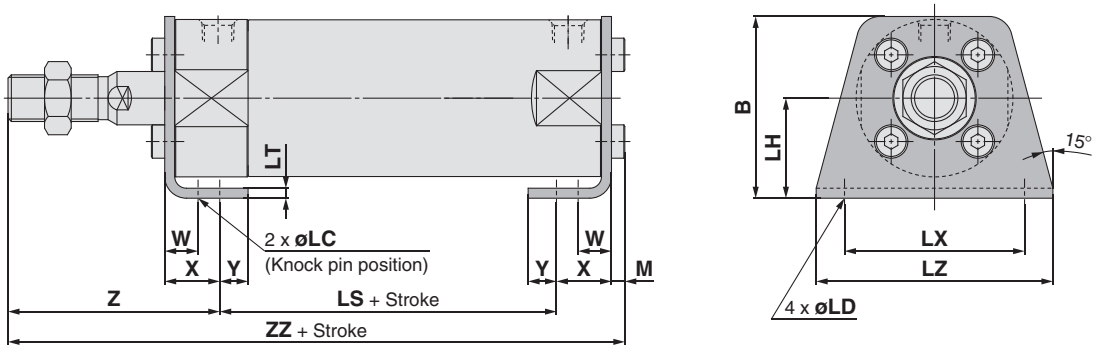

[mm]

Bore size	Stroke range	B	M	LC	LD	LH	LT	LX	LZ	W	X	Y	Z	1 to 50 st		51 to 100 st		101 to 125 st		126 to 200 st	
														LS	ZZ	LS	ZZ	LS	ZZ	LS	ZZ
20	Up to 125	34	3	4	6	20	3	32	44	10	15	7	47	70	135	95	160	120	185	—	—
25	Up to 200	38.5	3.5	4	6	22	3	36	49	10	15	7	52	70	140.5	95	165.5	120	190.5	145	215.5
32	Up to 200	45	3.5	4	7	25	3	44	58	10	16	8	53	70	142.5	95	167.5	120	192.5	145	217.5
40	Up to 200	54.5	4	4	7	30	3	54	71	10	16.5	8.5	63.5	76	160	101	185	126	210	151	235

Rod flange: CG1FN

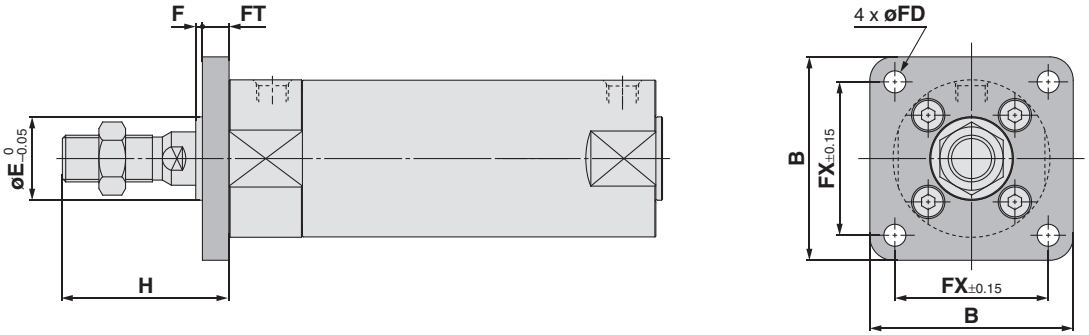

Head flange: CG1GN

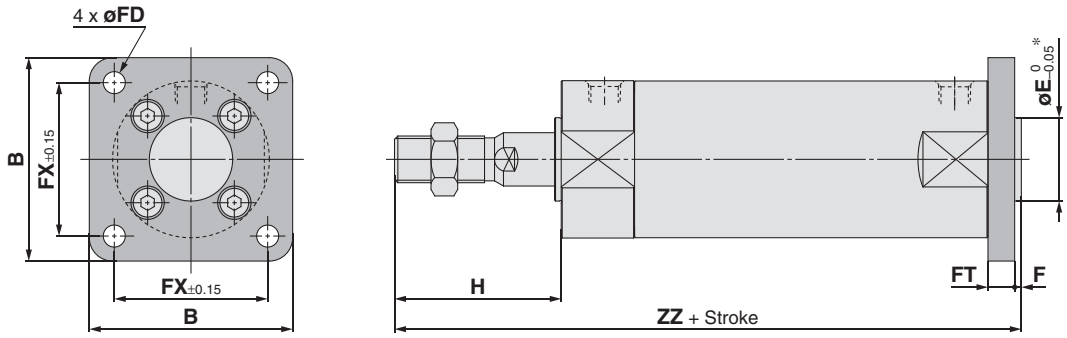

[mm]

Bore size	Stroke range	B	E	F	FX	FD	FT	H
20	Up to 125	40	12	2	28	5.5	6	35
25	Up to 200	44	14	2	32	5.5	7	40
32	Up to 200	53	18	2	38	6.6	7	40
40	Up to 200	61	25	2	46	6.6	8	50

∗ End boss is machined on the flange for øE.

Rod Flange [mm]

Bore size	ZZ			
	1 to 50 st	51 to 100 st	101 to 125 st	126 to 200 st
20	131	156	181	—
25	136	161	186	211
32	138	163	188	213
40	155	180	205	230

Head Flange [mm]

Bore size	ZZ			
	1 to 50 st	51 to 100 st	101 to 125 st	126 to 200 st
20	130	162	187	—
25	143	168	193	218
32	145	170	195	220
40	163	188	213	238

With Mounting Bracket

Rod trunnion: CG1UN

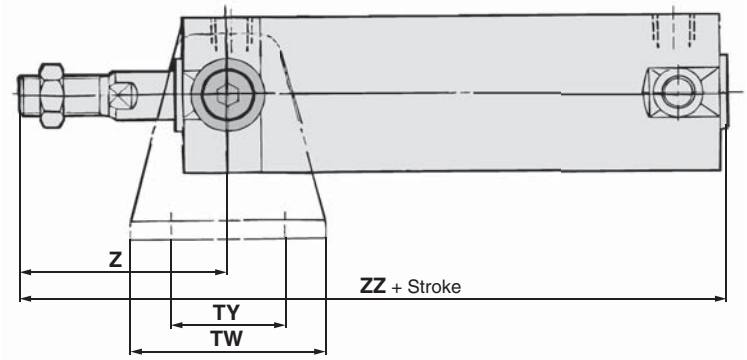

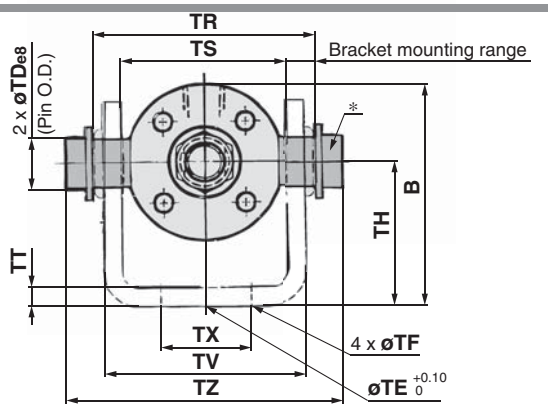

Head trunnion: CG1TN

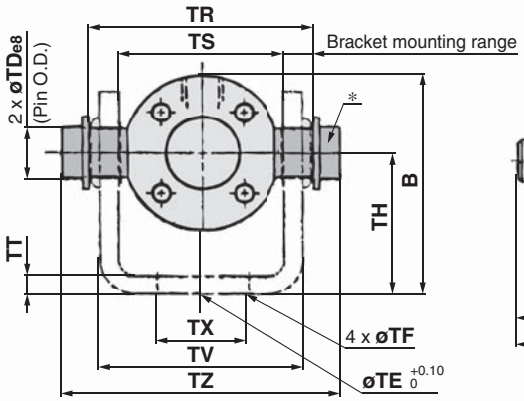

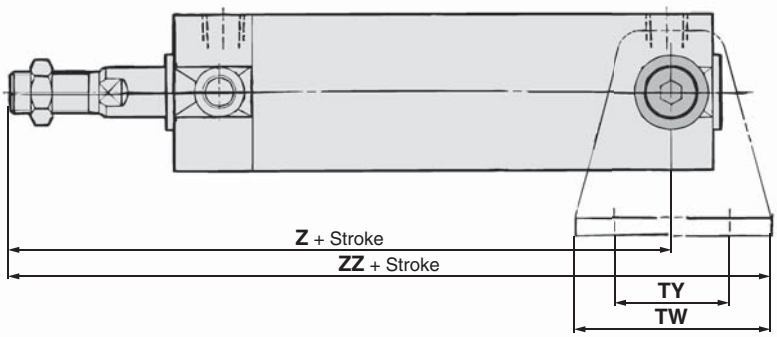

[mm]

Bore size	Stroke range	B	TDe8	TE	TF	TH	TR	TS	TT	TV	TW	TX	TY	TZ
20	Up to 125	38	$8^{-0.025}_{-0.047}$	10	5.5	25	39	28	3.2	(35.8)	42	16	28	47.6
25	Up to 200	45.5	$10^{-0.025}_{-0.047}$	10	5.5	30	43	33	3.2	(39.8)	42	20	28	53
32	Up to 200	54	$12^{-0.032}_{-0.059}$	10	6.6	35	54.5	40	4.5	(49.4)	48	22	28	67.7
40	Up to 200	63.5	$14^{-0.032}_{-0.059}$	10	6.6	40	65.5	49	4.5	(58.4)	56	30	30	78.7

Rod Trunnion

[mm]

Bore size	Z	ZZ			
		1 to 50 st	51 to 100 st	101 to 125 st	126 to 200 st
20	46	131	156	181	—
25	51	136	161	186	211
32	51	138	163	188	213
40	62	155	180	205	230

∗ Constructed of pins, flat washers and hexagon socket head cap bolts.
∗ Other dimensions are the same as basic type.

Head Trunnion

[mm]

Bore size	1 to 50 st		51 to 100 st		101 to 125 st		126 to 200 st	
	Z	ZZ	Z	ZZ	Z	ZZ	Z	ZZ
20	118	139	143	164	168	189	—	—
25	123	144	148	169	173	194	198	219
32	126	150	151	175	176	200	201	225
40	143	171	168	196	193	221	218	246

∗ Constructed of pins, flat washers and hexagon socket head cap bolts.
∗ Other dimensions are the same as basic type.

Clevis: CG1DN

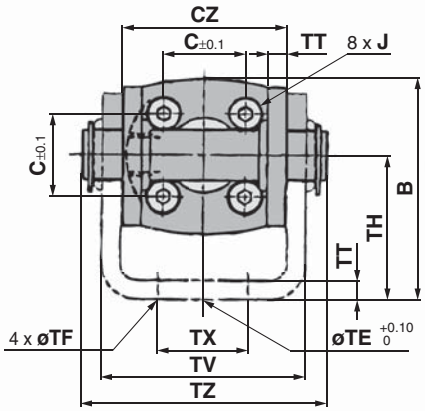

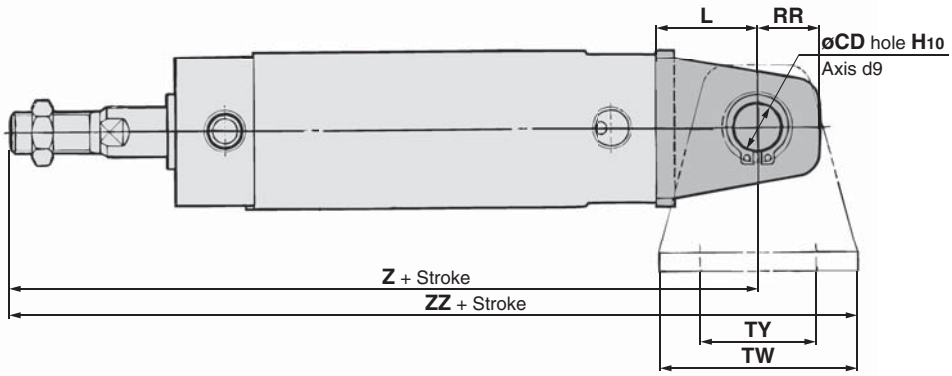

(The above shows the case port location is changed by 90°.)

Clevis

[mm]

Bore size	Stroke range	B	CD	CZ	L	RR	TE	TF	TH	TT	TV	TW	TX	TY	TZ	1 to 50 st		51 to 100 st		101 to 125 st		126 to 200 st	
																Z	ZZ	Z	ZZ	Z	ZZ	Z	ZZ
20	Up to 125	38	8	29	14	11	10	5.5	25	3.2	(35.8)	42	16	28	43.4	143	164	168	189	193	214	—	—
25	Up to 200	45.5	10	33	16	13	10	5.5	30	3.2	(39.8)	42	20	28	48	150	171	175	196	200	221	225	246
32	Up to 200	54	12	40	20	15	10	6.6	35	4.5	(49.4)	48	22	28	59.4	156	180	181	205	206	230	231	255
40	Up to 200	63.5	14	49	22	18	10	6.6	40	4.5	(58.4)	56	30	30	71.4	175	200	200	228	225	253	250	278

∗ For dimensions of pivot bracket, refer to page 22. ∗ Other dimensions are the same as basic type.

Air Cylinder: Non-rotating Rod Type
Double Acting
Series CG1K
ø 20, ø 25, ø 32, ø 40, ø 50, ø 63

How to Order

Type

N	Rubber bumper
A	Air cushion (ø 40 to ø 63 only)

Cylinder stroke [mm]
Refer to "Standard Strokes" on page 39.

Pivot bracket

—	None
N	Pivot bracket is shipped together with the product.

∗ Only for D, U, T mounting types
∗ Pivot bracket is shipped together with the product, but not assembled.

CG1K B N 25 – 100 Z – – –

With auto switch **CDG1K B N 25 – 100 Z – – – M9BW – –**

With auto switch (Built-in magnet)
Double acting, Non-rotating rod type

Mounting

B	Basic	G	Head flange
Z∗	Basic (without trunnion mounting female thread)	U	Rod trunnion
L	Axial foot	T	Head trunnion
F	Rod flange	D	Clevis

Note) Mounting bracket is shipped together with the product, but not assembled.
∗ The cylinder for F, G, L, D mounting types is Z: Basic (without trunnion mounting female thread).

Bore size

20	20 mm
25	25 mm
32	32 mm
40	40 mm
50	50 mm
63	63 mm

Rod end bracket

—	None
V	Single knuckle joint
W	Double knuckle joint

∗ No bracket is provided for the female rod end.
∗ Rod end bracket is shipped together with the product, but not assembled.
∗ A knuckle joint pin is not provided with the single knuckle joint.

Rod end thread

—	Male rod end
F	Female rod end

Number of auto switches

—	2 pcs.
S	1 pc.
n	"n" pcs.

Auto switch

—	Without auto switch

∗ For applicable auto switches, refer to the table below.

Made to Order
For details, refer to page 39.

Built-in Magnet Cylinder Model

If a built-in magnet cylinder without an auto switch is required, there is no need to enter the symbol for the auto switch.
(Example) CDG1KFA32-100Z

Applicable Auto Switches/Refer to the **Auto Switches Guide** for further information on auto switches.

Type	Special function	Electrical entry	Indicator light	Wiring (Output)	Load voltage DC	Load voltage AC	Auto switch model: Applicable bore size ø 20 to ø 63 Perpendicular	In-line	Lead wire length [m] 0.5 (—)	1 (M)	3 (L)	5 (Z)	None (N)	Pre-wired connector	Applicable load	
Solid state auto switch	——	Grommet	Yes	3-wire (NPN)	24 V	5 V, 12 V	—	M9NV	M9N	●	●	●	○	—	○	IC circuit	Relay, PLC
				3-wire (PNP)				M9PV	M9P	●	●	●	○	—	○		
				2-wire		12 V		M9BV	M9B	●	●	●	○	—	○	—	
		Connector						—	H7C	●	—	●	●	●	—		
	Diagnostic indication (2-colour indication)	Grommet		3-wire (NPN)		5 V, 12 V		M9NWV	M9NW	●	●	●	○	—	○	IC circuit	
				3-wire (PNP)				M9PWV	M9PW	●	●	●	○	—	○		
				2-wire		12 V		M9BWV	M9BW	●	●	●	○	—	○	—	
	Water resistant (2-colour indication)			3-wire (NPN)		5 V, 12 V		M9NAV**	M9NA**	○	○	●	○	—	○	IC circuit	
				3-wire (PNP)				M9PAV**	M9PA**	○	○	●	○	—	○		
				2-wire		12 V		M9BAV**	M9BA**	○	○	●	○	—	○	—	
	Diagnostic output (2-colour indication)			4-wire (NPN)		5 V, 12 V		—	H7NF	●	—	●	○	—	○	IC circuit	
Reed auto switch	——	Grommet	Yes	3-wire (Equiv. to NPN)	—	5 V	—	A96V	A96	●	—	●	—	—	—	IC circuit	—
				2-wire	24 V	12 V	100 V	A93V	A93	●	—	●	●	—	—	—	Relay, PLC
			No				100 V or less	A90V	A90	●	—	●	—	—	—	IC circuit	
			Yes				100 V, 200 V	—	B54	●	—	●	●	—	—	—	
			No				200 V or less	—	B64	●	—	●	—	—	—		
		Connector	Yes				—	—	C73C	●	—	●	●	●	—		
			No				24 V or less	—	C80C	●	—	●	●	●	—	IC circuit	
	Diagnostic indication (2-colour indication)	Grommet	Yes			—	—	—	B59W	●	—	●	—	—	—	—	

∗∗ Water resistant type auto switches can be mounted on the above models, but in such case SMC cannot guarantee water resistance. Please consult with SMC regarding water resistant types with the above model numbers.

∗ Lead wire length symbols: 0.5 m····· — (Example) M9NW
1 m····· M (Example) M9NWM
3 m····· L (Example) M9NWL
5 m····· Z (Example) M9NWZ
None····· N (Example) H7CN

∗ Solid state auto switches marked with "○" are produced upon receipt of order.

∗ Since there are other applicable auto switches than listed above, refer to page 74 for details.
∗ For details about auto switches with pre-wired connector, refer to the **Auto Switch Guide**.
∗ The D-A9□□/M9□□□ auto switches are shipped together, (but not assembled). (However, only the auto switch mounting brackets are assembled before shipment.)

Symbol

Rubber bumper

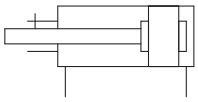

Air cushion

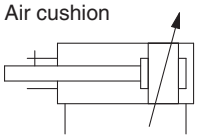

Made to Order

(For details, refer to pages 77 to 93.)

Symbol	Specifications
-XA□	Change of rod end shape
-XC8	Adjustable stroke cylinder/Adjustable extension type*1
-XC9	Adjustable stroke cylinder/Adjustable retraction type*1
-XC10	Dual stroke cylinder/Double rod type
-XC11	Dual stroke cylinder/Single rod type*1
-XC12	Tandem cylinder*1, *2
-XC13	Auto switch rail mounting*1
-XC20	Head cover axial port*1
-XC27	Double clevis and double knuckle joint pins made of stainless steel

*1 Only compatible with cylinders with rubber bumper.
*2 The shape is the same as the existing product. Use the existing seal kit.

Refer to pages 68 to 74 for cylinders with auto switches.

- Auto switch proper mounting position (detection at stroke end) and its mounting height
- Minimum stroke for auto switch mounting
- Auto switch mounting brackets/Part no.
- Operating range
- Cylinder mounting bracket, by stroke/ Auto switch mounting surfaces

Specifications

Bore size [mm]	20	25	32	40	50	63
Action	Double acting, Single rod					
Lubricant	Not required (Non-lube)					
Fluid	Air					
Proof pressure	1.5 MPa					
Maximum operating pressure	1.0 MPa					
Minimum operating pressure	0.05 MPa					
Ambient and fluid temperature	Without auto switch: –10 °C to 70 °C With auto switch : –10 °C to 60 °C (No freezing)					
Piston speed	50 to 500 mm/s					
Stroke length tolerance	Up to 1000 st $^{+1.4}_{0}$ mm, Up to 1500 st $^{+1.8}_{0}$ mm					
Cushion	Rubber bumper, Air cushion (ø 40 to ø 63 only)					
Rod non-rotating accuracy Note)	±1°		±0.8°	±0.5°		
Mounting	Basic, Basic (without trunnion mounting female thread), Axial foot, Rod flange, Head flange, Rod trunnion, Head trunnion, Clevis (used for changing the port location by 90°)					

Note) The values are for standard strokes.

Accessories

Mounting		Basic	Axial foot	Rod flange	Head flange	Rod trunnion	Head trunnion	Clevis
Standard	Rod end nut	●	●	●	●	●	●	●
	Clevis pin	—	—	—	—	—	—	●
Option	Single knuckle joint	●	●	●	●	●	●	●
	Double knuckle joint* (With pin)	●	●	●	●	●	●	●
	Pivot bracket	—	—	—	—	●	●	●

* A double knuckle joint pin and retaining rings are shipped together.

Standard Strokes

[mm]

Bore size	Standard stroke Note 1)	Maximum manufacturable stroke Note 2)
20	25, 50, 75, 100, 125, 150, 200	201 to 1500
25	25, 50, 75, 100, 125, 150, 200, 250, 300	301 to 1500
32		
40		
50, 63		

Note 1) Manufacture of intermediate strokes at 1 mm intervals is possible. (Spacers are not used.)
Note 2) The maximum manufacturable stroke shows the long stroke.
Note 3) Applicable strokes should be confirmed according to the usage. For details, refer to "Air Cylinders Model Selection". In addition, the products that exceed the standard stroke might not be able to fulfill the specifications due to the deflection etc.

Ordering Example of Cylinder Assembly

Cylinder model: CDG1KDN20-100Z-NW-M9BW

Mounting **D: Clevis**
Pivot bracket **N: Yes**
Rod end bracket **W: Double knuckle joint**
Auto switch D-M9BW: 2 pcs.

*Pivot bracket, double knuckle joint and auto switch are shipped together with the product, but not assembled.

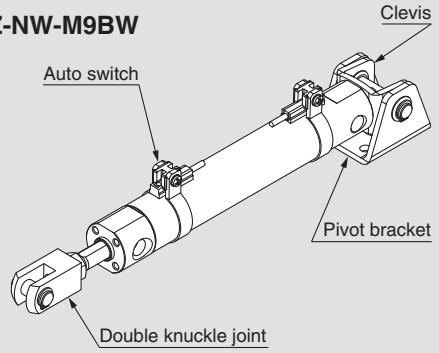

Weights

[kg]

Bore size [mm]		20	25	32	40	50	63
Basic weight	Basic	0.10	0.17	0.26	0.41	0.77	1.07
	Axial foot	0.21	0.30	0.42	0.63	1.25	1.79
	Flange	0.18	0.27	0.40	0.61	1.11	1.57
	Trunnion	0.11	0.19	0.29	0.46	0.91	1.21
	Clevis	0.15	0.25	0.41	0.64	1.17	1.75
Pivot bracket		0.08	0.09	0.17	0.25	0.44	0.80
Single knuckle joint		0.05	0.09	0.09	0.10	0.22	0.22
Double knuckle joint (with pin)		0.05	0.09	0.09	0.13	0.26	0.26
Additional weight per 50 mm of stroke		0.05	0.07	0.09	0.15	0.22	0.26
Additional weight with air cushion		—	—	—	0	0.01	0.04
Additional weight for long stroke		0.01	0.01	0.02	0.03	0.06	0.12
Weight reduction for female rod end		–0.01	–0.02	–0.02	–0.05	–0.10	–0.10

Calculation (Example) **CG1KLN20-100Z**
(Foot, ø 20, 100 stroke)

- Basic weight ····· 0.21 (Foot , ø 20)
- Additional weight ····· 0.05/50 stroke
- Air cylinder stroke····· 100 stroke

0.21 + 0.05 x 100/50 = **0.31 kg**

Mounting Brackets/Part No.

Mounting bracket	Order q'ty.	Bore size [mm]						Contents
		20	25	32	40	50	63	
Axial foot	2 Note)	CG-L020	CG-L025	CG-L032	CG-L040	CG-L050	CG-L063	2 foots, 8 mounting bolts
Flange	1	CG-F020	CG-F025	CG-F032	CG-F040	CG-F050	CG-F063	1 flange, 4 mounting bolts
Trunnion pin	1	CG-T020	CG-T025	CG-T032	CG-T040	CG-T050	CG-T063	2 trunnion pins, 2 trunnion bolts, 2 flat washers
Clevis	1	CG-D020	CG-D025	CG-D032	CG-D040	CG-D050	CG-D063	1 clevis, 4 mounting bolts, 1 clevis pin, 2 retaining rings
Pivot bracket	1	CG-020-24A	CG-025-24A	CG-032-24A	CG-040-24A	CG-050-24A	CG-063-24A	1 pivot bracket

Note) Order two foots per cylinder.

Construction

With rubber bumper

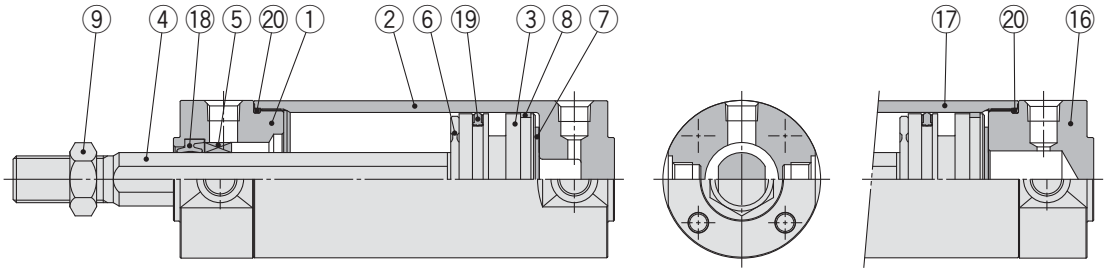

Long stroke

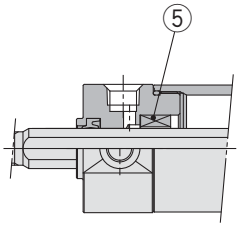

ø 20 to ø 32

With air cushion

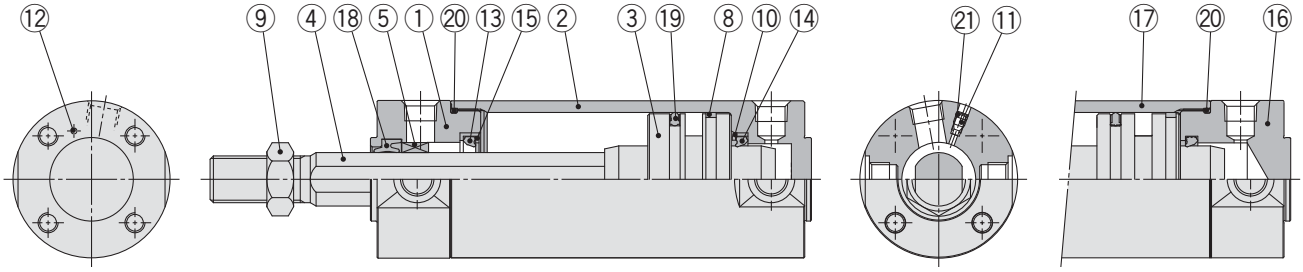

Long stroke

Component Parts

No.	Description		Material	Note
1	**Rod cover**		Aluminium alloy	Hard anodised
2	**Tube cover**		Aluminium alloy	Hard anodised
3	**Piston**		Aluminium alloy	
4	**Piston rod**		Stainless steel	For ø 20 or ø 25 with built-in magnet
			Carbon steel*	Hard chrome plating*
5	**Non-rotating guide**		Bearing alloy	
6	**Bumper**		Resin	ø 32 or larger is common.
7	**Bumper**		Resin	
8	**Wear ring**		Resin	
9	**Rod end nut**		Carbon steel	Zinc chromated
10	**Seal retainer**		Rolled steel	Zinc chromated
11	**Cushion valve**	ø 40 or smaller	Carbon steel	Electroless nickel plating
		ø 50 or larger	Steel wire	Zinc chromated
12	**Steel ball**		Carbon steel	
13	**Cushion seal A**		Urethane	ø 32 or larger is common.
14	**Cushion seal B**		Urethane	
15	**Cushion seal holder**		Aluminium alloy	
16	**Head cover**		Aluminium alloy	Hard anodised
17	**Cylinder tube**		Aluminium alloy	Hard anodised
18	**Rod seal**		NBR	
19	**Piston seal**		NBR	
20	**Tube gasket**		NBR	
21	**Valve seal**		NBR	

Note) For cylinders with auto switches, the magnet is installed in the piston.
∗ The material is stainless steel for ø 20 to ø 32.

Replacement Parts: Seal Kit

Bore size [mm]	Kit no.	Contents
20	CG1KN20Z-PS	Set of the nos. ⑱, ⑲, ⑳
25	CG1KN25Z-PS	
32	CG1KN32Z-PS	
40	CG1KN40Z-PS	

Note) Refer to the Specific Product Precautions on page 10 for Disassembly/Replacement.
Order with the kit number according to the bore size.
∗ The seal kit includes a grease pack (10 g).
Order with the following part number when only the grease pack is needed.
Grease pack part number: GR-S-010 (10 g)

Basic

With rubber bumper
ø 20 to ø 63

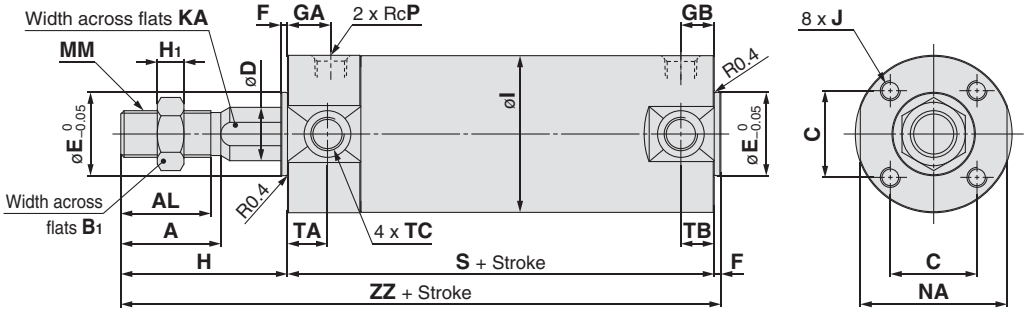

With air cushion
ø 40 to ø 63

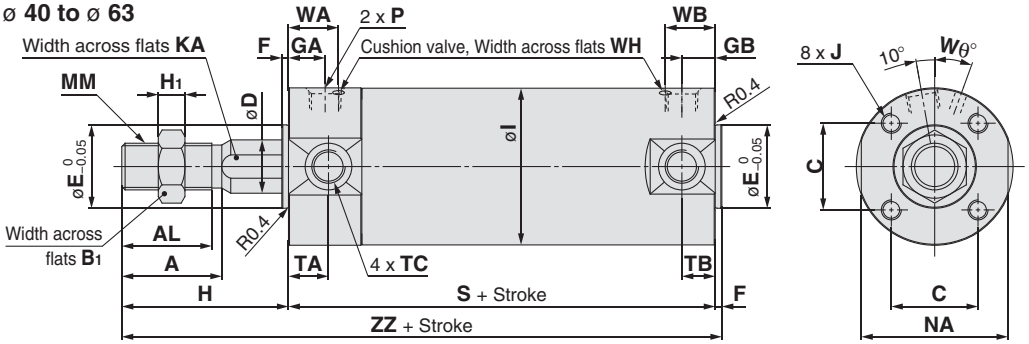

With Air Cushion [mm]

Bore size	WA	WB	Wθ	WH
40	17	15 (17)	20°	1.5
50	18	16 (18)	20°	3
63	18	17 (18)	20°	3

Note) ( ): Denotes the dimensions for long stroke.

Female rod end

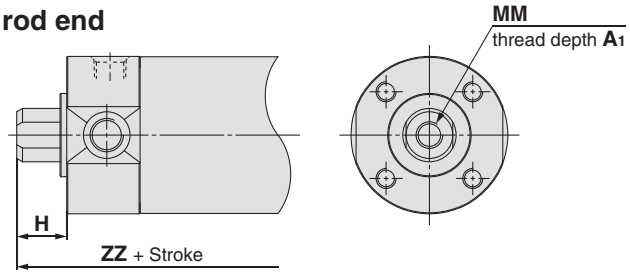

Female Rod End [mm]

Bore size	A1	H	MM	ZZ
20	8	13	M4 x 0.7	84 (92)
25	8	14	M5 x 0.8	85 (93)
32	12	14	M6 x 1	87 (95)
40	13	15	M8 x 1.25	95 (104)
50	18	16	M10 x 1.5	108 (120)
63	18	16	M10 x 1.5	108 (120)

[mm]

Bore size	Stroke range		A	AL	B1	C	D	E	F	GA	GB	H	H1	I	J	KA	MM	NA	P	S	TA	TB	TC	ZZ
	Standard	Long stroke																						
20	Up to 200	201 to 1500	18	15.5	13	14	9.2	12	2	12	10 (12)	35	5	26	M4 x 0.7 depth 7	8	M8 x 1.25	24	1/8	69 (77)	11	11	M5 x 0.8	106 (114)
25	Up to 300	301 to 1500	22	19.5	17	16.5	11	14	2	12	10 (12)	40	6	31	M5 x 0.8 depth 7.5	10	M10 x 1.25	29	1/8	69 (77)	11	11	M6 x 0.75	111 (119)
32	Up to 300	301 to 1500	22	19.5	17	20	12	18	2	12	10 (12)	40	6	38	M5 x 0.8 depth 8	10	M10 x 1.25	35.5	1/8	71 (79)	11	10 (11)	M8 x 1.0	113 (121)
40	Up to 300	301 to 1500	30	27	19	26	16	25	2	13	10 (13)	50	8	47	M6 x 1 depth 12	14	M14 x 1.5	44	1/8	78 (87)	12	10 (12)	M10 x 1.25	130 (139)
50	Up to 300	301 to 1500	35	32	27	32	20	30	2	14	12 (14)	58	11	58	M8 x 1.25 depth 16	18	M18 x 1.5	55	1/4	90 (102)	13	12 (13)	M12 x 1.25	150 (162)
63	Up to 300	301 to 1500	35	32	27	38	20	32	2	14	12 (14)	58	11	72	M10 x 1.5 depth 16	18	M18 x 1.5	69	1/4	90 (102)	13	12 (13)	M14 x 1.5	150 (162)

Note 1) Dimensions for each mounting bracket are the same as those for the CG1 standard or long stroke model. Refer to pages 14 to 20.
Note 2) ( ): Denotes the dimensions for long stroke.

⚠ Precautions

Be sure to read this before handling. Refer to the back cover for Safety Instructions. For Actuator and Auto Switch Precautions, refer to "Handling Precautions for SMC Products" and the Operation Manual on SMC website, http://www.smc.eu

∗ Caution on handling/disassembly is provided in addition to that shown below. Refer to page 10.

Handling/Disassembly

⚠ Caution

1. Avoid using the air cylinder in such a way that rotational torque would be applied to the piston rod.

- If rotational torque is applied, the non-rotating guide will become deformed, thus affecting the non-rotating accuracy. Refer to the table below for the approximate values of the allowable range of rotational torque.

Allowable rotational torque (N·m or less)	ø 20	ø 25, ø 32	ø 40, ø 50, ø 63
	0.2	0.25	0.44

- To screw a bracket or a nut onto the piston rod, make sure to retract the piston rod entirely, and place a wrench over the flat portion of the rod that protrudes. Tighten it by giving consideration to prevent the tightening torque from being applied to the non-rotating guide.

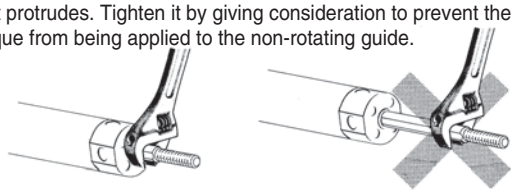

2. When replacing rod seals, please contact SMC.

Air leakage may be happened, depending on the position in which a rod seal is fitted. Thus, please contact SMC when replacing them.

Air Cylinder: Non-rotating Rod Type
Double Acting, Double Rod
Series CG1KW
ø 20, ø 25, ø 32, ø 40, ø 50, ø 63

How to Order

CG1KW L N 25 – 100 Z

With auto switch **CDG1KW L N 25 – 100 Z – M9BW □**

With auto switch
(Built-in magnet)

Non-rotating rod type

Double acting, Double rod type

Mounting

B	Basic
Z*	Basic (without trunnion mounting female thread)
L	Axial foot
F	Flange
U	Trunnion

∗ Mounting bracket is shipped together with the product, but not assembled.
∗ The cylinder for F, L mounting types is Z: Basic (without trunnion mounting female thread).

Type

N	Rubber bumper

Bore size

20	20 mm
25	25 mm
32	32 mm
40	40 mm
50	50 mm
63	63 mm

Cylinder stroke [mm]
Refer to "Standard Strokes" on page 44.

Auto switch

—	Without auto switch

∗ For applicable auto switches, refer to the table below.

Number of auto switches

—	2 pcs.
S	1 pc.
n	"n" pcs.

Built-in Magnet Cylinder Model

If a built-in magnet cylinder without an auto switch is required, there is no need to enter the symbol for the auto switch.
(Example) CDG1KWFN32-100Z

Applicable Auto Switches/Refer to the **Auto Switch Guide** for further information on auto switches.

Type	Special function	Electrical entry	Indicator light	Wiring (Output)	Load voltage DC	Load voltage AC	Auto switch model (Applicable bore size ø 20 to ø 63) Perpendicular	In-line	Lead wire length [m] 0.5 (—)	1 (M)	3 (L)	5 (Z)	None (N)	Pre-wired connector	Applicable load	
Solid state auto switch	—	Grommet	Yes	3-wire (NPN)	24 V	5 V, 12 V	—	M9NV	M9N	●	●	●	○	—	○	IC circuit	Relay, PLC
				3-wire (PNP)				M9PV	M9P	●	●	●	○	—	○	
				2-wire		12 V		M9BV	M9B	●	●	●	○	—	○	—
		Connector						—	H7C	●	—	●	●	●	—	
	Diagnostic indication (2-colour indication)	Grommet		3-wire (NPN)		5 V, 12 V		M9NWV	M9NW	●	●	●	○	—	○	IC circuit
				3-wire (PNP)				M9PWV	M9PW	●	●	●	○	—	○	
				2-wire		12 V		M9BWV	M9BW	●	●	●	○	—	○	—
	Water resistant (2-colour indication)			3-wire (NPN)		5 V, 12 V		M9NAV**	M9NA**	○	○	●	○	—	○	IC circuit
				3-wire (PNP)				M9PAV**	M9PA**	○	○	●	○	—	○	
				2-wire		12 V		M9BAV**	M9BA**	○	○	●	○	—	○	—
	Diagnostic output (2-colour indication)			4-wire (NPN)		5 V, 12 V		—	H7NF	●	—	●	○	—	○	IC circuit
Reed auto switch	—	Grommet	Yes	3-wire (Equiv. to NPN)	—	5 V	—	A96V	A96	●	—	●	—	—	—	IC circuit	—
				2-wire	24 V	12 V	100 V	A93V	A93	●	—	●	●	—	—	—	Relay, PLC
			No				100 V or less	A90V	A90	●	—	●	—	—	—	IC circuit
			Yes				100 V, 200 V	—	B54	●	—	●	●	—	—	—
			No				200 V or less	—	B64	●	—	●	—	—	—	
		Connector	Yes				—	—	C73C	●	—	●	●	●	—	
			No				24 V or less	—	C80C	●	—	●	●	●	—	IC circuit
	Diagnostic indication (2-colour indication)	Grommet	Yes			—	—	—	B59W	●	—	●	—	—	—	—

∗∗ Water resistant type auto switches can be mounted on the above models, but in such case SMC cannot guarantee water resistance.
Please consult with SMC regarding water resistant types with the above model numbers.

∗ Lead wire length symbols: 0.5 m····· — (Example) M9NW
1 m····· M (Example) M9NWM
3 m····· L (Example) M9NWL
5 m····· Z (Example) M9NWZ
None····· N (Example) H7CN

∗ Solid state auto switches marked with "○" are produced upon receipt of order.

∗ Since there are other applicable auto switches than listed above, refer to page 74 for details.
∗ For details about auto switches with pre-wired connector, refer to the **Auto Switch Guide**.
∗ The D-A9□□/M9□□□ auto switches are shipped together, (but not assembled). (However, only the auto switch mounting brackets are assembled before shipment.)

Symbol

Rubber bumper

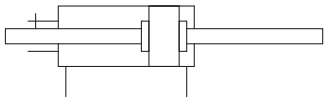

Specifications

Bore size [mm]	20	25	32	40	50	63
Action	Double acting, Double rod					
Lubricant	Not required (Non-lube)					
Fluid	Air					
Proof pressure	1.5 MPa					
Maximum operating pressure	1.0 MPa					
Minimum operating pressure	0.08 MPa					
Ambient and fluid temperature	Without auto switch: –10 °C to 70 °C With auto switch : –10 °C to 60 °C (No freezing)					
Piston speed	50 to 500 mm/s					
Stroke length tolerance	Up to 1000 st $^{+1.4}_{0}$ mm, Up to 1500 st $^{+1.8}_{0}$ mm					
Cushion	Rubber bumper					
Rod non-rotating accuracy Note)	±1°		±0.8°		±0.5°	
Mounting	Basic, Basic (without trunnion mounting female thread), Axial foot, Flange, Trunnion					

∗ Foot and flange types of cylinder sizes from ø 20 to ø 63 do not have trunnion mounting female thread. Operate the cylinder within the allowable kinetic energy. Refer to page 24 for details.
Note) The values are for standard strokes.

Refer to pages 68 to 74 for cylinders with auto switches.

- Auto switch proper mounting position (detection at stroke end) and its mounting height
- Minimum stroke for auto switch mounting
- Auto switch mounting brackets/Part no.
- Operating range
- Cylinder mounting bracket, by stroke/ Auto switch mounting surfaces

Accessories

Mounting		Basic	Axial foot	Flange	Trunnion
Standard	Rod end nut	●	●	●	●
Option	Single knuckle joint	●	●	●	●
	Double knuckle joint (with pin)∗	●	●	●	●
	Pivot bracket	—	—	—	●

∗ A double knuckle joint pin and retaining rings are shipped together.

Weights

[kg]

Bore size [mm]		20	25	32	40	50	63
Basic weight	Basic	0.13	0.22	0.33	0.55	1.02	1.37
	Axial foot	0.24	0.35	0.49	0.77	1.50	2.09
	Flange	0.21	0.32	0.47	0.75	1.36	1.87
	Trunnion	0.14	0.24	0.36	0.60	1.16	1.51
Pivot bracket		0.08	0.09	0.17	0.25	0.44	0.80
Single knuckle joint		0.05	0.09	0.09	0.10	0.22	0.22
Double knuckle joint (with pin)		0.05	0.09	0.09	0.13	0.26	0.26
Additional weight per 50 mm of stroke		0.07	0.10	0.13	0.23	0.34	0.38
Weight reduction for female rod end		–0.02	–0.04	–0.04	–0.10	–0.20	–0.20

Calculation (Example) **CG1KWLN32-100Z** (Foot, ø 32, 100 stroke)
- Basic weight·····0.49 (Foot, ø 32)
- Additional weight·····0.13/50 stroke
- Air cylinder stroke·····100 stroke

0.49 + 0.13 x 100/50 = **0.75 kg**

Standard Strokes

[mm]

Bore size	Standard stroke Note 1)	Maximum manufacturable stroke Note 2)
20	25, 50, 75, 100, 125, 150, 200	201 to 1500
25	25, 50, 75, 100, 125, 150, 200, 250, 300	301 to 1500
32		
40		
50, 63		

Note 1) Manufacture of intermediate strokes at 1 mm intervals is possible. (Spacers are not used.)
Note 2) The maximum manufacturable stroke shows the long stroke.
Note 3) Applicable strokes should be confirmed according to the usage. For details, refer to "Air Cylinders Model Selection". In addition, the products that exceed the standard stroke might not be able to fulfill the specifications due to the deflection etc.

Mounting Brackets/Part No.

Mounting bracket	Order q'ty	Bore size [mm] 20	25	32	40	50	63	Contents
Axial foot	2 Note)	CG-L020	CG-L025	CG-L032	CG-L040	CG-L050	CG-L063	2 foots, 8 mounting bolts
Flange	1	CG-F020	CG-F025	CG-F032	CG-F040	CG-F050	CG-F063	1 flange, 4 mounting bolts
Trunnion pin	1	CG-T020	CG-T025	CG-T032	CG-T040	CG-T050	CG-T063	2 trunnion pins, 2 trunnion bolts, 2 flat washers
Pivot bracket	1	CG-020-24A	CG-025-24A	CG-032-24A	CG-040-24A	CG-050-24A	CG-063-24A	1 pivot bracket

Note) Order two foots per cylinder.

Construction

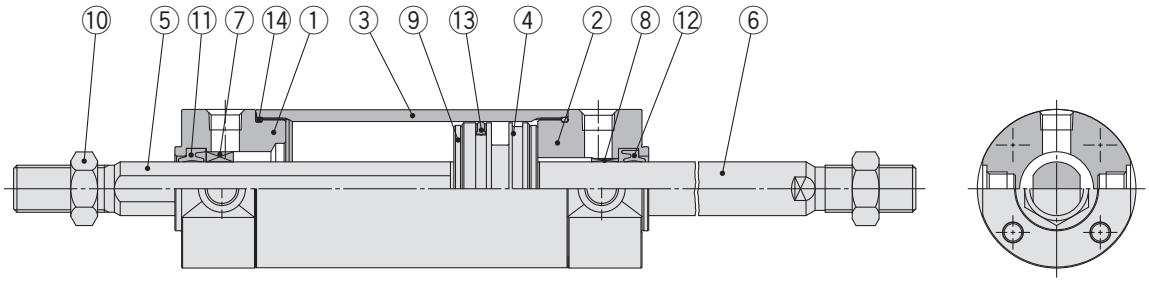

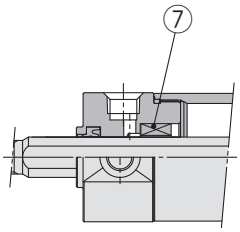

ø 20 to ø 32

Component Parts

No.	Description	Material	Note
1	**Rod cover A**	Aluminium alloy	Hard anodised
2	**Rod cover B**	Aluminium alloy	Hard anodised
3	**Cylinder tube**	Aluminium alloy	Hard anodised
4	**Piston**	Aluminium alloy	
5	**Piston rod A**	Stainless steel	ø 32 or smaller
		Carbon steel*	Hard chrome plating* ø 40 or larger
6	**Piston rod B**	Stainless steel	For ø 20 or ø 25 with built-in magnet
		Carbon steel**	Hard chrome plating*
7	**Non-rotating guide**	Bearing alloy	
8	**Bushing**	Bearing alloy	
9	**Bumper**	Resin	
10	**Rod end nut**	Carbon steel	Zinc chromated
11	**Rod seal A**	NBR	
12	**Rod seal B**	NBR	
13	**Piston seal**	NBR	
14	**Tube gasket**	NBR	

∗ The material is stainless steel for ø 20 to ø 32.
∗∗ The material for ø 20, ø 25 cylinders with auto switches is made of stainless steel.
∗∗∗ For cylinders with auto switches, the magnet is installed in the piston.

Replacement Parts: Seal Kit

Bore size [mm]	Kit no.	Contents
20	CG1KWN20Z-PS	Set of the nos. ⑪, ⑫, ⑬, ⑭
25	CG1KWN25Z-PS	
32	CG1KWN32Z-PS	
40	CG1KWN40Z-PS	

Note) Refer to the Specific Product Precautions on page 10 for Disassembly/Replacement.
Order with the kit number according to the bore size.

∗ The seal kit includes a grease pack (10 g).
Order with the following part number when only the grease pack is needed.
Grease pack part number: GR-S-010 (10 g)

Basic with Rubber Bumper: CG1KWBN

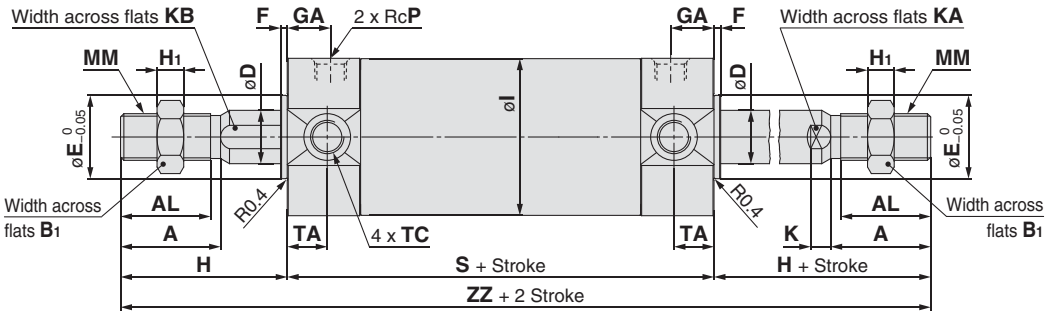

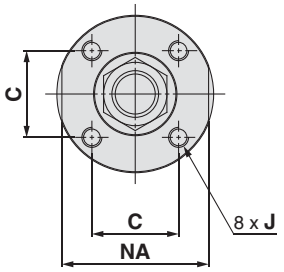

[mm]

Bore size	Stroke range	A	AL	B1	C	D	DK	E	F	GA	H1	I	J	K	KA	KB	MM	NA	P	S
20	Up to 1500	18	15.5	13	14	8	9.2	12	2	12	5	26	M4 x 0.7 depth 7	5	6	8	M8 x 1.25	24	1/8	77
25	Up to 1500	22	19.5	17	16.5	10	11	14	2	12	6	31	M5 x 0.8 depth 7.5	5.5	8	10	M10 x 1.25	29	1/8	77
32	Up to 1500	22	19.5	17	20	12	12	18	2	12	6	38	M5 x 0.8 depth 8	5.5	10	10	M10 x 1.25	35.5	1/8	79
40	Up to 1500	30	27	19	26	16	16	25	2	13	8	47	M6 x 1 depth 12	6	14	14	M14 x 1.5	44	1/8	87
50	Up to 1500	35	32	27	32	20	20	30	2	14	11	58	M8 x 1.25 depth 16	7	18	18	M18 x 1.5	55	1/4	102
63	Up to 1500	35	32	27	38	20	20	32	2	14	11	72	M10 x 1.5 depth 16	7	18	18	M18 x 1.5	69	1/4	102

[mm]

Bore size	TA	TC	H	ZZ
20	11	M5 x 0.8	35	147
25	11	M6 x 0.75	40	157
32	11	M8 x 1.0	40	159
40	12	M10 x 1.25	50	187
50	13	M12 x 1.25	58	218
63	13	M14 x 1.5	58	218

Note 1) Dimensions are the same as those for the CG1W standard. Refer to page 29.

⚠ Precautions

Be sure to read this before handling. Refer to the back cover for Safety Instructions. For Actuator and Auto Switch Precautions, refer to "Handling Precautions for SMC Products" and the Operation Manual on SMC website, http://www.smc.eu

∗ Caution on handling/disassembly is provided in addition to that shown below. Refer to page 10.

Handling/Disassembly

⚠ Caution

1. Avoid using the air cylinder in such a way that rotational torque would be applied to the piston rod.

- If rotational torque is applied, the non-rotating guide will become deformed, thus affecting the non-rotating accuracy. Refer to the table below for the approximate values of the allowable range of rotational torque.

Allowable rotational torque (N·m or less)	ø 20	ø 25, ø 32	ø 40, ø 50, ø 63
	0.2	0.25	0.44

- To screw a bracket or a nut onto the piston rod, make sure to retract the piston rod entirely, and place a wrench over the flat portion of the rod that protrudes. Tighten it by giving consideration to prevent the tightening torque from being applied to the non-rotating guide.

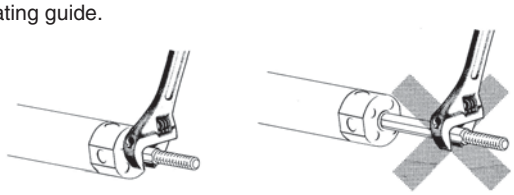

2. When replacing rod seals, please contact SMC.

Air leakage may be happened, depending on the position in which a rod seal is fitted. Thus, please contact SMC when replacing them.

Air Cylinder: Direct Mount Type
Double Acting
Series CG1R
ø 20, ø 25, ø 32, ø 40, ø 50, ø 63

How to Order

CG1R N 25 – 100 □ Z – □ – □

With auto switch **CDG1R N 25 – 100 □ Z – □ – M9BW □ – □**

With auto switch (Built-in magnet)

Type

N	Rubber bumper
A	Air cushion

Bore size

20	20 mm
25	25 mm
32	32 mm
40	40 mm
50	50 mm
63	63 mm

Cylinder stroke [mm]
Refer to "Standard Strokes" on page 48.

Rod end bracket

—	None
V	Single knuckle joint
W	Double knuckle joint

∗ No bracket is provided for the female rod end.
∗ Rod end bracket is shipped together with the product, but not assembled.
∗ A knuckle joint pin is not provided with the single knuckle joint.

Rod end thread

—	Male rod end
F	Female rod end

Number of auto switches

—	2 pcs.
S	1 pc.
n	"n" pcs.

Auto switch

—	Without auto switch

∗ For applicable auto switches, refer to the table below.

Made to Order
For details, refer to page 48.

Built-in Magnet Cylinder Model

If a built-in magnet cylinder without an auto switch is required, there is no need to enter the symbol for the auto switch.
(Example) CDG1RA32-100Z

Applicable Auto Switches/Refer to the **Auto Switch Guide** for further information on auto switches.

Type	Special function	Electrical entry	Indicator light	Wiring (Output)	Load voltage DC		Load voltage AC	Auto switch model, Applicable bore size ø 20 to ø 63: Perpendicular	In-line	Lead wire length [m] 0.5 (—)	1 (M)	3 (L)	5 (Z)	None (N)	Pre-wired connector	Applicable load	
Solid state auto switch	——	Grommet	Yes	3-wire (NPN)	24 V	5 V, 12 V	—	M9NV	M9N	●	●	●	○	—	○	IC circuit	Relay, PLC
				3-wire (PNP)				M9PV	M9P	●	●	●	○	—	○		
				2-wire		12 V		M9BV	M9B	●	●	●	○	—	○	—	
		Connector						—	H7C	●	—	●	●	●	—		
	Diagnostic indication (2-colour indication)	Grommet		3-wire (NPN)		5 V, 12 V		M9NWV	M9NW	●	●	●	○	—	○	IC circuit	
				3-wire (PNP)				M9PWV	M9PW	●	●	●	○	—	○		
				2-wire		12 V		M9BWV	M9BW	●	●	●	○	—	○	—	
	Water resistant (2-colour indication)			3-wire (NPN)		5 V, 12 V		M9NAV**	M9NA**	○	○	●	○	—	○	IC circuit	
				3-wire (PNP)				M9PAV**	M9PA**	○	○	●	○	—	○		
				2-wire		12 V		M9BAV**	M9BA**	○	○	●	○	—	○	—	
	Diagnostic output (2-colour indication)			4-wire (NPN)		5 V, 12 V		—	H7NF	●	—	●	○	—	○	IC circuit	
Reed auto switch	——	Grommet	Yes	3-wire (Equiv. to NPN)	—	5 V	—	A96V	A96	●	—	●	—	—	—	IC circuit	—
			No	2-wire	24 V	12 V	100 V	A93V	A93	●	—	●	●	—	—	—	Relay, PLC
							100 V or less	A90V	A90	●	—	●	—	—	—	IC circuit	
			Yes				100 V, 200 V	—	B54	●	—	●	●	—	—	—	
			No				200 V or less	—	B64	●	—	●	—	—	—		
		Connector	Yes				—	—	C73C	●	—	●	●	●	—		
			No				24 V or less	—	C80C	●	—	●	●	●	—	IC circuit	
	Diagnostic indication (2-colour indication)	Grommet	Yes			—	—	—	B59W	●	—	●	—	—	—	—	

∗∗ Water resistant type auto switches can be mounted on the above models, but in such case SMC cannot guarantee water resistance.
Please consult with SMC regarding water resistant types with the above model numbers.

∗ Lead wire length symbols: 0.5 m····· — (Example) M9NW
1 m····· M (Example) M9NWM
3 m····· L (Example) M9NWL
5 m····· Z (Example) M9NWZ
None····· N (Example) H7CN

∗ Solid state auto switches marked with "○" are produced upon receipt of order.

∗ Since there are other applicable auto switches than listed above, refer to page 74 for details.
∗ For details about auto switches with pre-wired connector, refer to the Auto Switch Guide.
∗ The D-A9□□/M9□□□ auto switches are shipped together, (but not assembled). (However, only the auto switch mounting brackets are assembled before shipment.)

The CG1R direct mount cylinder can be installed directly through the use of a square rod cover.

Space-saving has been realized.

Because it is a directly mounted style without using brackets, its overall length is shorter, and its installation pitch can be made smaller. Thus, the space that is required for installation has been dramatically reduced.

Symbol

Rubber bumper

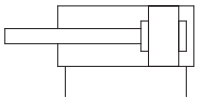

Air cushion

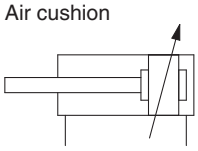

Made to Order
(For details, refer to pages 77 to 93.)

Symbol	Specifications
-XA□	Change of rod end shape
-XB6	Heat resistant cylinder (–10 to 150 °C)*2
-XB7	Cold resistant cylinder (–40 to 70 °C)*1, *3
-XB9	Low speed cylinder (10 to 50 mm/s)*1, *3
-XB13	Low speed cylinder (5 to 50 mm/s)*1, *3
-XC6	Made of stainless steel
-XC8	Adjustable stroke cylinder/Adjustable extension type*1
-XC9	Adjustable stroke cylinder/Adjustable retraction type*1
-XC13	Auto switch rail mounting*1
-XC20	Head cover axial port*1
-XC22	Fluororubber seal
-XC85	Grease for food processing equipment

∗1 Only compatible with cylinders with rubber bumper.
∗2 Cylinders with rubber bumper have no bumper.
∗3 The shape is the same as the existing product. Use the existing seal kit.

Refer to pages 68 to 74 for cylinders with auto switches.

- Auto switch proper mounting position (detection at stroke end) and its mounting height
- Minimum stroke for auto switch mounting
- Auto switch mounting brackets/Part no.
- Operating range
- Cylinder mounting bracket, by stroke/ Auto switch mounting surfaces

Specifications

Bore size [mm]	20	25	32	40	50	63
Action	Double acting, Single rod					
Lubricant	Not required (Non-lube)					
Fluid	Air					
Proof pressure	1.5 MPa					
Maximum operating pressure	1.0 MPa					
Minimum operating pressure	0.05 MPa					
Ambient and fluid temperature	Without auto switch: –10 °C to 70 °C With auto switch : –10 °C to 60 °C (No freezing)					
Piston speed	50 to 1000 mm/s					
Stroke length tolerance	Up to 300 st $^{+1.4}_{0}$ mm					
Cushion	Rubber bumper, Air cushion					

Standard Strokes

[mm]

Bore size	Standard stroke*
20	25, 50, 75, 100, 125, 150
25, 32	25, 50, 75, 100, 125, 150, 200
40, 50, 63	25, 50, 75, 100, 125, 150, 200, 250, 300

∗ Please consult with SMC for strokes which exceed the standard stroke length.
Note 1) Intermediate strokes not listed above are produced upon receipt of order.
Manufacture of intermediate strokes at 1 mm intervals is possible. (Spacers are not used.)
Note 2) Applicable strokes should be confirmed according to the usage. For details, refer to "Air Cylinders Model Selection". In addition, the products that exceed the standard stroke might not be able to fulfill the specifications due to the deflection etc.

Tightening Torque: Tighten the cylinder mounting bolts with the following tightening torque.

Bore size [mm]	Hexagon socket head cap screw size	Tightening torque [N·m]
20	M5 x 0.8	2.4 to 3.6
25	M6	4.2 to 6.2
32	M8	10.0 to 15.0
40	M10	19.6 to 29.4
50	M12	33.6 to 50.4
63	M16	84.8 to 127.2

Ordering Example of Cylinder Assembly

Cylinder model: CDG1RN20-100Z-W-M9BW

Rod end bracket W: Double knuckle joint
Auto switch D-M9BW: 2 pcs.

∗ Double knuckle joint and auto switch are shipped together with the product, but not assembled.

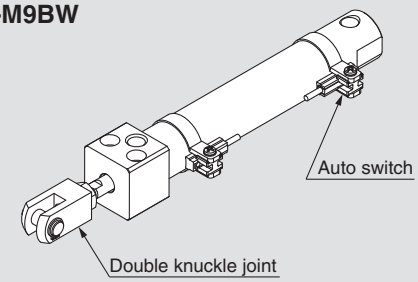

Weights

[kg]

Bore size [mm]	20	25	32	40	50	63
Basic weight	0.14	0.23	0.35	0.57	1.04	1.49
Single knuckle joint	0.05	0.09	0.09	0.10	0.22	0.22
Double knuckle joint (with pin)	0.05	0.09	0.09	0.13	0.26	0.26
Additional weight per 50 mm of stroke	0.05	0.07	0.09	0.14	0.21	0.25
Additional weight with air cushion	0	0.01	0.04	0	0.01	0.04
Weight reduction for female rod end	–0.01	–0.02	–0.02	–0.05	–0.10	–0.10

Calculation (Example) **CG1RN32-100Z** (ø 32, 100 stroke)

- Basic weight 0.35
- Additional weight ..... 0.09/50 stroke
- Air cylinder stroke ..... 100 stroke

0.35 + 0.09 x 100/50 = **0.53 kg**

Accessories

Mounting		Basic
Standard	Rod end nut	●
Option	Single knuckle joint	●
	Double knuckle joint* (with pin)	●

* A double knuckle joint pin and retaining rings are shipped together.

⚠ Precautions

Be sure to read this before handling.
Refer to the back cover for Safety Instructions. For Actuator and Auto Switch Precautions, refer to "Handling Precautions for SMC Products" and the Operation Manual on SMC website, http://www.smc.eu

* Caution on handling/disassembly is provided in addition to that shown below. Refer to page 10.

Handling/Disassembly

⚠ Caution

When a cylinder is operated with one end fixed and the other free, a bending moment may act on the cylinder due to vibration generated at the stroke end, which can damage the cylinder. In such a case, install a mounting bracket to suppress the vibration of the cylinder body or reduce the piston speed so that the cylinder does not vibrate. Also, use a mounting bracket when moving the cylinder body or when a long stroke cylinder is mounted horizontally and fixed at one end.

Construction

With rubber bumper

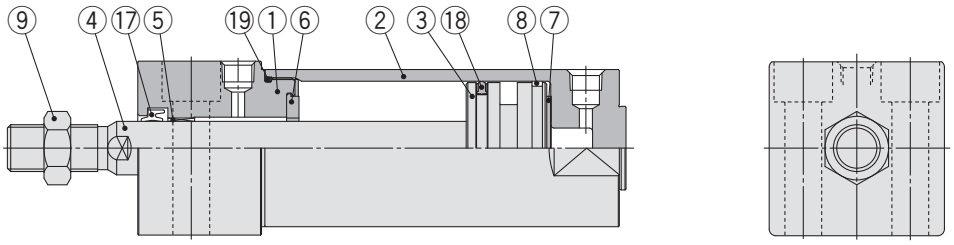

With air cushion

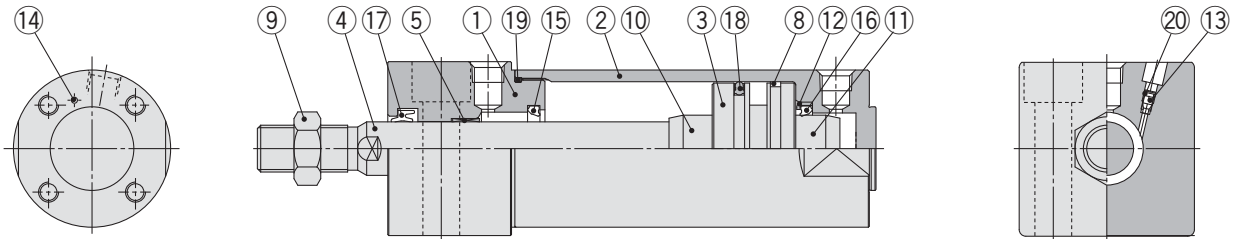

Component Parts

No.	Description	Material	Note
1	**Rod cover**	Aluminium alloy	Hard anodised
2	**Tube cover**	Aluminium alloy	Hard anodised
3	**Piston**	Aluminium alloy	
4	**Piston rod**	Stainless steel	For ø 20 or ø 25 with built-in magnet
		Carbon steel*	Hard chrome plating*
5	**Bushing**	Bearing alloy	
6	**Bumper**	Resin	ø 32 or larger is common.
7	**Bumper**	Resin	
8	**Wear ring**	Resin	
9	**Rod end nut**	Carbon steel	Zinc chromated
10	**Cushion ring A**	Aluminium alloy	

No.	Description		Material	Note
11	**Cushion ring B**		Aluminium alloy	
12	**Seal retainer**		Rolled steel	Zinc chromated
13	**Cushion valve**	ø 40 or smaller	Carbon steel	Electroless nickel plating
		ø 50 or larger	Steel wire	Zinc chromated
14	**Steel ball**		Carbon steel	
15	**Cushion seal A**		Urethane	ø 32 or larger is common.
16	**Cushion seal B**		Urethane	
17	**Rod seal**		NBR	
18	**Piston seal**		NBR	
19	**Tube gasket**		NBR	
20	**Valve seal**		NBR	

Note) For cylinders with auto switches, the magnet is installed in the piston.
* The material for ø 20, ø 25 cylinders with auto switches is made of stainless steel.

Replacement parts/Seal kit are the same as standard type, double acting, single rod. Refer to page 11.

Note) Refer to the Specific Product Precautions on page 10 for Disassembly/Replacement.

Basic with Bottom Mounting

With rubber bumper

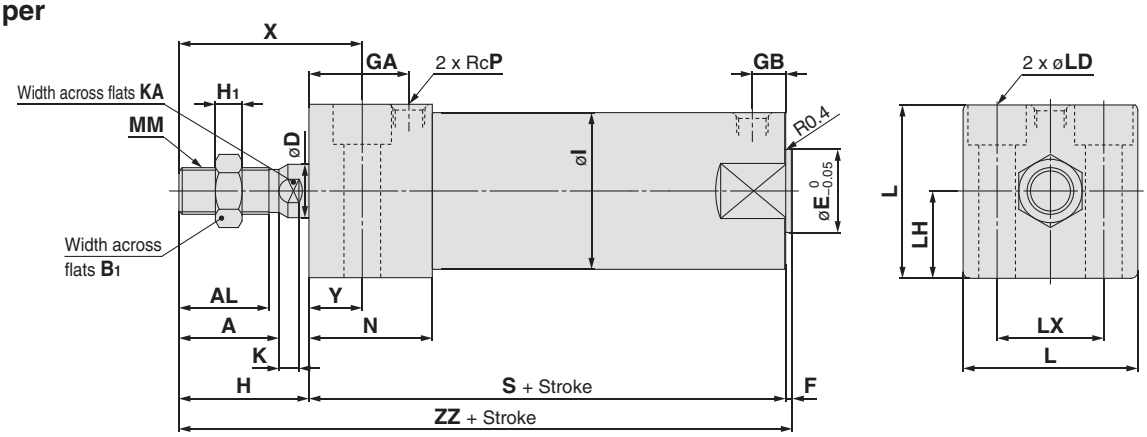

With air cushion

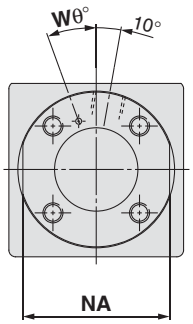

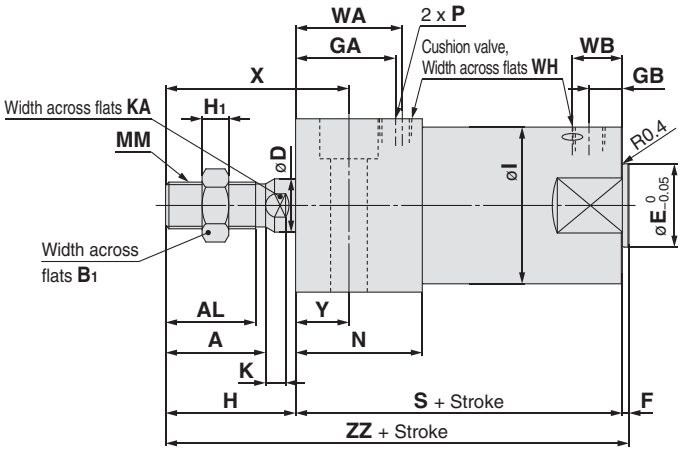

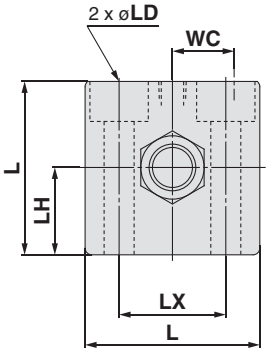

Female rod end

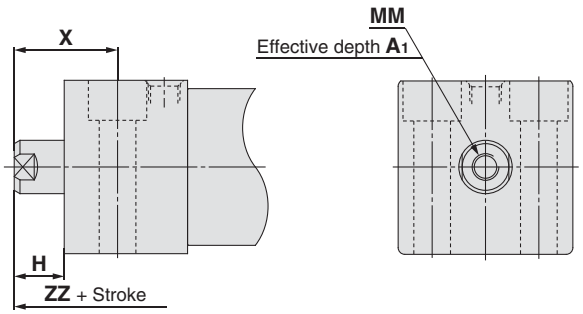

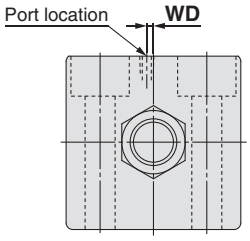

ø 20, ø 25

[mm]

Bore size	Stroke range	A	AL	B1	D	E	F	GA	GB	H	H1	I	K	KA	L	LD	LH	LX	MM	N	P	S	X	Y	ZZ
20	Up to 150	18	15.5	13	8	12	2	20	10	27	5	26	5	6	30.4	ø 5.5, ø 9.5 depth of counterbore 6	15	18	M8 x 1.25	27	1/8	75	38	11	104
25	Up to 200	22	19.5	17	10	14	2	22	10	32	6	31	5.5	8	36.4	ø 6.6, ø 11 depth of counterbore 7	18	22	M10 x 1.25	29	1/8	77	44	12	111
32	Up to 200	22	19.5	17	12	18	2	26	10	32	6	38	5.5	10	42.4	ø 9, ø 14 depth of counterbore 9	21	24	M10 x 1.25	33	1/8	83	45	13	117
40	Up to 300	30	27	19	16	25	2	30	10	39	8	47	6	14	52.4	ø 11, ø 17.5 depth of counterbore 12	26	32	M14 x 1.5	37	1/8	94	55	16	135
50	Up to 300	35	32	27	20	30	2	33	12	45	11	58	7	18	64.5	ø 14, ø 20 depth of counterbore 14	32	41	M18 x 1.5	44	1/4	108	62	17	155
63	Up to 300	35	32	27	20	32	2	39	12	45	11	72	7	18	76.6	ø 18, ø 26 depth of counterbore 18	38	46	M18 x 1.5	50	1/4	114	64	19	161

With Air Cushion

[mm]

Bore size	Stroke range	P	WA	WB	WC	WD	Wθ	WH
20	Up to 150	M5 x 0.8	22	15	5.5	2	25°	1.5
25	Up to 200	M5 x 0.8	24	14.5	7	2	25°	1.5
32	Up to 200	Rc1/8	28	14	11.5	—	25°	1.5
40	Up to 300	Rc1/8	32	15	15	—	20°	1.5
50	Up to 300	Rc1/4	36	16	17.5	—	20°	3
63	Up to 300	Rc1/4	42	17	20.5	—	20°	3

Female Rod End

[mm]

Bore size	A1	H	MM	X	ZZ
20	8	13	M4 x 0.7	24	90
25	8	14	M5 x 0.8	26	93
32	12	14	M6 x 1	27	99
40	13	15	M8 x 1.25	31	111
50	18	16	M10 x 1.5	33	126
63	18	16	M10 x 1.5	35	132

Air Cylinder: Direct Mount, Non-rotating Rod Type

Series CG1KR

ø 20, ø 25, ø 32, ø 40, ø 50, ø 63

How to Order

CG1KRN 25 – 100 □ Z – □ – □

With auto switch **CDG1KRN 25 – 100 □ Z – □ – M9BW □ – □**

With auto switch
(Built-in magnet)

Non-rotating rod type

Mounting

N	Rubber bumper

Note) Air cushion type "CG1KRA" is a Made-to-Order product.

Bore size

20	20 mm
25	25 mm
32	32 mm
40	40 mm
50	50 mm
63	63 mm

Cylinder stroke [mm]
Refer to "Standard Strokes" on page 53.

Rod end thread

—	Male rod end
F	Female rod end

Rod end bracket

—	None
V	Single knuckle joint
W	Double knuckle joint

∗ No bracket is provided for the female rod end.
∗ Rod end bracket is shipped together with the product, but not assembled.
∗ A knuckle joint pin is not provided with the single knuckle joint.

Auto switch

—	Without auto switch

∗ For applicable auto switches, refer to the table below.

Number of auto switches

—	2 pcs.
S	1 pc.
n	"n" pcs.

Made to Order
Refer to page 53 for details.

Built-in Magnet Cylinder Model

If a built-in magnet cylinder without an auto switch is required, there is no need to enter the symbol for the auto switch.
(Example) CDG1KRN32-100Z

Applicable Auto Switches/Refer to the **Auto Switch Guide** for further information on auto switches.

Type	Special function	Electrical entry	Indicator light	Wiring (Output)	Load voltage DC		Load voltage AC	Auto switch model (Applicable bore size ø 20 to ø 63) Perpendicular	In-line	Lead wire length (m) 0.5 (—)	1 (M)	3 (L)	5 (Z)	None (N)	Pre-wired connector	Applicable load	
Solid state auto switch	—	Grommet	Yes	3-wire (NPN)	24 V	5 V, 12 V	—	M9NV	M9N	●	●	●	○	—	○	IC circuit	Relay, PLC
				3-wire (PNP)				M9PV	M9P	●	●	●	○	—	○		
				2-wire		12 V		M9BV	M9B	●	●	●	○	—	○	—	
		Connector						—	H7C	●	—	●	●	●	—		
	Diagnostic indication (2-colour indication)	Grommet		3-wire (NPN)		5 V, 12 V		M9NWV	M9NW	●	●	●	○	—	○	IC circuit	
				3-wire (PNP)				M9PWV	M9PW	●	●	●	○	—	○		
				2-wire		12 V		M9BWV	M9BW	●	●	●	○	—	○	—	
	Water resistant (2-colour indication)			3-wire (NPN)		5 V, 12 V		M9NAV**	M9NA**	○	○	●	○	—	○	IC circuit	
				3-wire (PNP)				M9PAV**	M9PA**	○	○	●	○	—	○		
				2-wire		12 V		M9BAV**	M9BA**	○	○	●	○	—	○	—	
	Diagnostic output (2-colour indication)			4-wire (NPN)		5 V, 12 V		—	H7NF	●	—	●	○	—	○	IC circuit	
Reed auto switch	—	Grommet	Yes	3-wire (Equiv. to NPN)	—	5 V	—	A96V	A96	●	—	●	—	—	—	IC circuit	—
			No	2-wire	24 V	12 V	100 V	A93V	A93	●	—	●	●	—	—	—	Relay, PLC
							100 V or less	A90V	A90	●	—	●	—	—	—	IC circuit	
			Yes				100 V, 200 V	—	B54	●	—	●	●	—	—	—	
			No				200 V or less	—	B64	●	—	●	—	—	—		
		Connector	Yes				—	—	C73C	●	—	●	●	●	—		
			No				24 V or less	—	C80C	●	—	●	●	●	—	IC circuit	
	Diagnostic indication (2-colour indication)	Grommet	Yes			—	—	—	B59W	●	—	●	—	—	—	—	

** Water resistant type auto switches can be mounted on the above models, but in such case SMC cannot guarantee water resistance.
Please consult with SMC regarding water resistant types with the above model numbers.

∗ Lead wire length symbols: 0.5 m ····· — (Example) M9NW
1 m ····· M (Example) M9NWM
3 m ····· L (Example) M9NWL
5 m ····· Z (Example) M9NWZ
None ····· N (Example) H7CN

∗ Solid state auto switches marked with "○" are produced upon receipt of order.

∗ Since there are other applicable auto switches than listed above, refer to page 74 for details.
∗ For details about auto switches with pre-wired connector, refer to the **Auto Switch Guide**.
∗ The D-A9□□/M9□□□ auto switches are shipped together, (but not assembled). (However, only auto switch mounting brackets are assembled before shipment.)

Series CG1KR direct mount, non-rotating rod type cylinder can be installed directly through the use of a square rod cover.

Space-saving has been realized.

Because it is a directly mounted style without using brackets, its overall length is shorter, and its installation pitch can be made smaller. Thus, the space that is required for installation has been dramatically reduced.

Symbol Rubber bumper

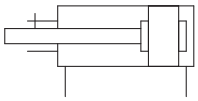

Made to Order
(For details, refer to pages 77 to 93.)

Symbol	Specifications
-XC8	Adjustable stroke cylinder/Adjustable extension type*1
-XC9	Adjustable stroke cylinder/Adjustable retraction type*1
-XC20	Head cover axial port

*1 The shape is the same as the existing product. Use the existing seal kit.

Accessories

Mounting		Basic
Standard	Rod end nut	●
Option	Single knuckle joint	●
	Double knuckle joint* (with pin)	●

* A double knuckle joint pin and retaining rings are shipped together.

Refer to pages 68 to 74 for cylinders with auto switches.

- Auto switch proper mounting position (detection at stroke end) and its mounting height
- Minimum stroke for auto switch mounting
- Auto switch mounting brackets/Part no.
- Operating range
- Cylinder mounting bracket, by stroke/ Auto switch mounting surfaces

Specifications

Bore size [mm]	20	25	32	40	50	63
Action	Double acting, Single rod					
Lubricant	Not required (Non-lube)					
Fluid	Air					
Proof pressure	1.5 MPa					
Maximum operating pressure	1.0 MPa					
Minimum operating pressure	0.05 MPa					
Ambient and fluid temperature	Without auto switch: –10 °C to 70 °C With auto switch : –10 °C to 60 °C (No freezing)					
Piston speed	50 to 500 mm/s					
Stroke length tolerance	Up to 300 st $^{+1.4}_{0}$ mm					
Cushion	Rubber bumper					
Rod non-rotating accuracy	±1°		±0.8°	±0.5°		

Weights

[kg]

Bore size [mm]	20	25	32	40	50	63
Basic weight	0.14	0.24	0.35	0.56	1.04	1.48
Single knuckle joint	0.05	0.09	0.09	0.10	0.22	0.22
Double knuckle joint (with pin)	0.05	0.09	0.09	0.13	0.26	0.26
Additional weight per 50 mm of stroke	0.05	0.07	0.09	0.15	0.22	0.26
Weight reduction for female rod end	–0.01	–0.02	–0.02	–0.05	–0.10	–0.10

Calculation (Example) **CG1KRN32-100Z** (ø 32, 100 stroke)

- Basic weight ····· 0.35
- Additional weight ····· 0.09/50 stroke
- Air cylinder stroke ····· 100 stroke

0.35 + 0.09 x 100/50 = **0.53 kg**

Standard Strokes

[mm]

Bore size	Standard stroke*
20	25, 50, 75, 100, 125, 150
25, 32	25, 50, 75, 100, 125, 150, 200
40, 50, 63	25, 50, 75, 100, 125, 150, 200, 250, 300

* Please consult with SMC for strokes which exceed the standard stroke length.
Note 1) Intermediate strokes not listed above are produced upon receipt of order. Manufacture of intermediate strokes at 1 mm intervals is possible. (Spacers are not used.)
Note 2) Applicable strokes should be confirmed according to the usage. For details, refer to "Air Cylinders Model Selection". In addition, the products that exceed the standard stroke might not be able to fulfill the specifications due to the deflection etc.

Tightening Torque: Tighten the cylinder mounting bolts with the following tightening torque.

Bore size [mm]	Hexagon socket head cap screw size	Tightening torque [N·m]
20	M5 x 0.8	2.4 to 3.6
25	M6	4.2 to 6.2
32	M8	10.0 to 15.0
40	M10	19.6 to 29.4
50	M12	33.6 to 50.4
63	M16	84.8 to 127.2

Ordering Example of Cylinder Assembly

Cylinder model: CDG1KRN20-100Z-W-M9BW

Rod end bracket W: Double knuckle joint
Auto switch D-M9BW: 2 pcs.

* Double knuckle joint and auto switch are shipped together with the product, but not assembled.

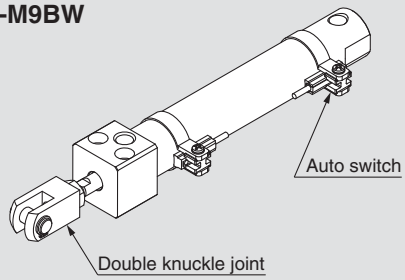

Construction

Non-rotating rod type/ Bottom mounting style

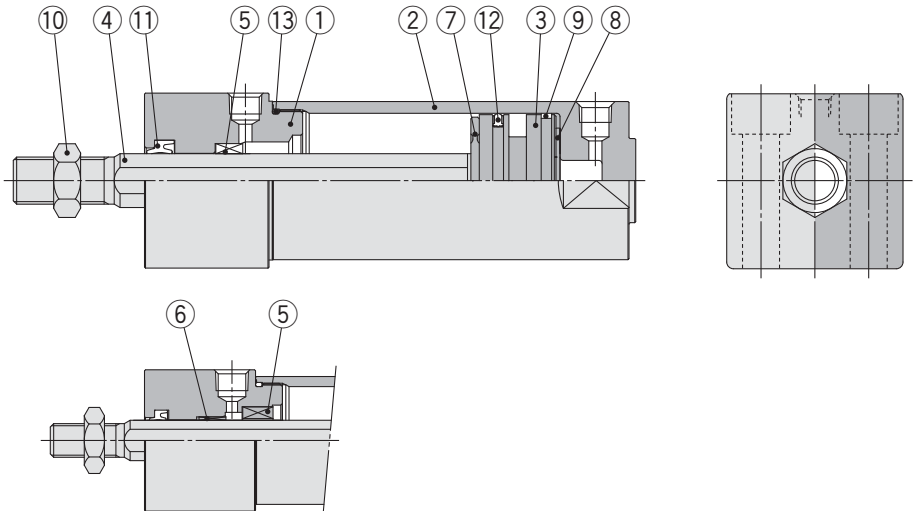

ø 20 to ø 32

Component Parts

No.	Description		Material	Note
1	**Rod cover**		Aluminium alloy	Clear hard anodised
2	**Tube cover**		Aluminium alloy	Clear hard anodised
3	**Piston**		Aluminium alloy	
4	**Piston rod**	ø 20 to ø 32	Stainless steel	
		ø 40 to ø 63	Carbon steel	Hard chrome plating
5	**Non-rotating guide**		Oil-impregnated sintered alloy	
6	**Bushing**		Oil-impregnated sintered alloy	ø 20 to ø 32 only
7	**Bumper**		Resin	
8	**Bumper**		Resin	
9	**Wear ring**		Resin	
10	**Rod end nut**		Rolled steel	Zinc chromated
11	**Rod seal**		NBR	
12	**Piston seal**		NBR	
13	**Tube gasket**		NBR	

Replacement parts/Seal kit are the same as double acting, non-rotating rod type. Refer to page 41.

Note) Refer to the Specific Product Precautions on page 10 for Disassembly/Replacement.

⚠ Precautions

Be sure to read this before handling. Refer to the back cover for Safety Instructions. For Actuator and Auto Switch Precautions, refer to "Handling Precautions for SMC Products" and the Operation Manual on SMC website, http://www.smc.eu

Handling/Disassembly

⚠ Caution

When a cylinder is operated with one end fixed and the other free, a bending moment may act on the cylinder due to vibration generated at the stroke end, which can damage the cylinder. In such a case, install a mounting bracket to suppress the vibration of the cylinder body or reduce the piston speed so that the cylinder does not vibrate. Also, use a mounting bracket when moving the cylinder body or when a long stroke cylinder is mounted horizontally and fixed at one end.

1. Avoid using the air cylinder in such a way that rotational torque would be applied to the piston rod.

- If rotational torque is applied, the non-rotating guide will become deformed, thus affecting the non-rotating accuracy. Refer to the table below for the approximate values of the allowable range of rotational torque.

Allowable rotational torque (N·m or less)	ø 20	ø 25, ø 32	ø 40, ø 50, ø 63
	0.2	0.25	0.44

- To screw a bracket or a nut onto the piston rod, make sure to retract the piston rod entirely, and place a wrench over the flat portion of the rod that protrudes. Tighten it by giving consideration to prevent the tightening torque from being applied to the non-rotating guide.

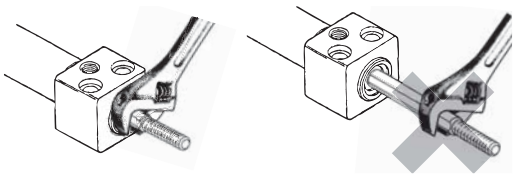

2. When replacing rod seals, please contact SMC.

Air leakage may be happened, depending on the position in which a rod seal is fitted. Thus, please contact SMC when replacing them.

Basic with Bottom Mounting: CG1KRN

With rubber bumper

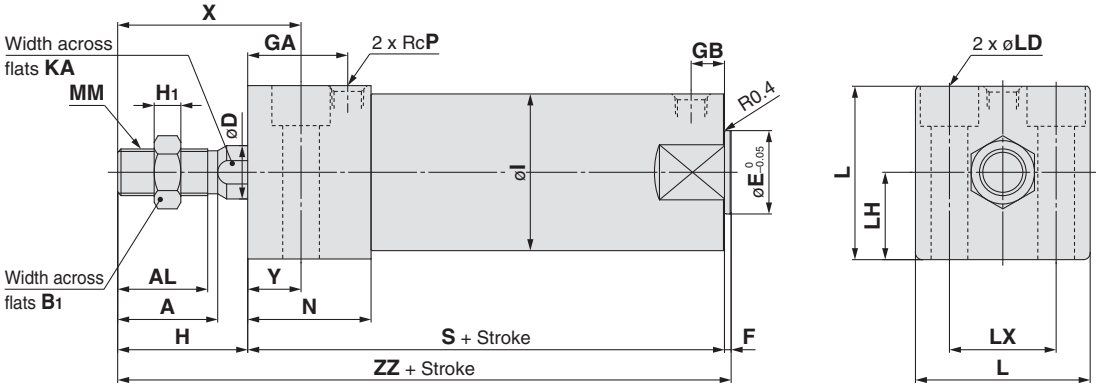

Female rod end

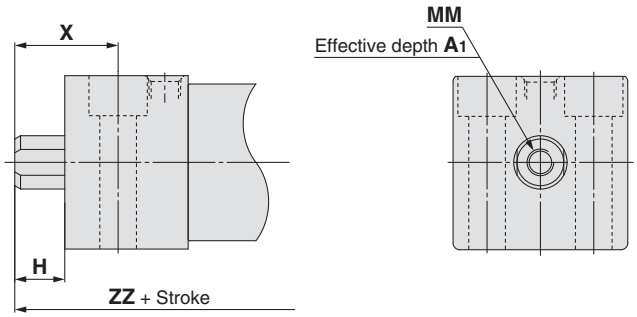

Female Rod End [mm]

Bore size [mm]	A_1	H	MM	X	ZZ
20	8	13	M4 x 0.7	24	90
25	8	14	M5 x 0.8	26	93
32	12	14	M6 x 1	27	99
40	13	15	M8 x 1.25	31	111
50	18	16	M10 x 1.5	33	126
63	18	16	M10 x 1.5	35	132

[mm]

Bore size [mm]	Stroke range [mm]	A	AL	B_1	D	E	F	GA	GB	H	H_1	I	KA	L	LD	LH	LX	MM	N	P	S	X	Y	ZZ
20	Up to 150	18	15.5	13	9.2	12	2	20	10	27	5	26	8	30.4	ø 5.5, ø 9.5 depth of counterbore 6	15	18	M8 x 1.25	27	1/8	75	38	11	104
25	Up to 200	22	19.5	17	11	14	2	22	10	32	6	31	10	36.4	ø 6.6, ø 11 depth of counterbore 7	18	22	M10 x 1.25	29	1/8	77	44	12	111
32	Up to 200	22	19.5	17	12	18	2	26	10	32	6	38	10	42.4	ø 9, ø 14 depth of counterbore 9	21	24	M10 x 1.25	33	1/8	83	45	13	117
40	Up to 300	30	27	19	16	25	2	30	10	39	8	47	14	52.4	ø 11, ø 17.5 depth of counterbore 12	26	32	M14 x 1.5	37	1/8	94	55	16	135
50	Up to 300	35	32	27	20	30	2	33	12	45	11	58	18	64.5	ø 14, ø 20 depth of counterbore 14	32	41	M18 x 1.5	44	1/4	108	62	17	155
63	Up to 300	35	32	27	20	32	2	39	12	45	11	72	18	76.6	ø 18, ø 26 depth of counterbore 18	38	46	M18 x 1.5	50	1/4	114	64	19	161

Auto switch mounting position is the same as that on page 70.

Air Cylinder: With End Lock

Series CBG1

ø 20, ø 25, ø 32, ø 40, ø 50, ø 63, ø 80, ø 100

How to Order

CBG1 L N 25 – 100 ☐ – H N – ☐

CDBG1 L N 25 – 100 ☐ – H N – M9BW ☐ – C – ☐

With auto switch (Built-in magnet)

Mounting

B	Basic
L	Axial foot
F	Rod flange
G	Head flange
U*	Rod trunnion
T*	Head trunnion
D	Clevis

* Not available for bore size ø 80 and ø 100. Besides, trunnion cannot be attached in the side to which an end lock is attached.
Note) Mounting brackets are shipped together, (but not assembled).

Type

N	Rubber bumper
A	Air cushion

Bore size

20	20 mm	50	50 mm
25	25 mm	63	63 mm
32	32 mm	80	80 mm
40	40 mm	100	100 mm

Cylinder stroke [mm]
Refer to "Standard Strokes" on page 57.

Manual release

N	Non-locking type
L	Locking type

Lock position

H	Head end lock
R	Rod end lock
W	Double end lock

With rod boot

—	Without rod boot
J	Nylon tarpaulin
K	Heat resistant tarpaulin

* In the case of w/rod boot, and a foot bracket or rod side flange as a bracket, those parts are to be assembled at the time of shipment.

Number of auto switches

—	2 pcs.
S	1 pc.
n	"n" pcs.

Auto switch

—	Without auto switch

* For applicable auto switches, refer to the table below.

Auto switch mounting bracket Note)
Note) This symbol is indicated when the D-A9□ or M9□ type auto switch is specified. This mounting bracket does not apply to other auto switches (D-C7□ and H7□, etc.) (—)

Made to Order
Refer to page 57 for details.

Built-in Magnet Cylinder Model

If a built-in magnet cylinder without an auto switch is required, there is no need to enter the symbol for the auto switch.
(Example) CDBG1FA32-100-RL

Applicable Auto Switches/Refer to the **Auto Switch Guide** for further information on auto switches.

Type	Special function	Electrical entry	Indicator light	Wiring (Output)	Load voltage DC		Load voltage AC	Auto switch model: Applicable bore size ø 20 to ø 63 Perpendicular	ø 20 to ø 63 In-line	ø 80, ø 100 In-line	Lead wire length [m] 0.5 (—)	1 (M)	3 (L)	5 (Z)	None (N)	Pre-wired connector	Applicable load	
Solid state auto switch	——	Grommet	Yes	3-wire (NPN)	24 V	5 V, 12 V	—	M9NV	M9N	—	●	●	●	○	—	○	IC circuit	Relay, PLC
								—	—	G59	●	—	●	○	—	○		
				3-wire (PNP)				M9PV	M9P	—	●	●	●	○	—	○		
								—	—	G5P	●	—	●	○	—	○		
				2-wire		12 V		M9BV	M9B	—	●	●	●	○	—	○	—	
								—	—	K59	●	—	●	○	—	○		
		Connector						—	H7C	—	●	—	●	●	●	—		
	Diagnostic indication (2-colour indication)	Grommet		3-wire (NPN)		5 V, 12 V		M9NWV	M9NW	—	●	●	●	○	—	○	IC circuit	
								—	—	G59W	●	—	●	○	—	○		
				3-wire (PNP)				M9PWV	M9PW	—	●	●	●	○	—	○		
								—	—	G5PW	●	—	●	○	—	○		
				2-wire		12 V		M9BWV	M9BW	—	●	●	●	○	—	○	—	
								—	—	K59W	●	—	●	○	—	○		
	Water resistant (2-colour indication)			3-wire (NPN)		5 V, 12 V		M9NAV**	M9NA**	—	○	○	●	○	—	○	IC circuit	
				3-wire (PNP)				M9PAV**	M9PA**	—	○	○	●	○	—	○		
				2-wire		12 V		M9BAV**	M9BA**	—	○	○	●	○	—	○	—	
								—	—	G5BA**	—	—	●	○	—	○		
	Diagnostic output (2-colour indication)			4-wire (NPN)		5 V, 12 V		—	H7NF	—	●	—	●	○	—	○	IC circuit	
Reed auto switch	——	Grommet	Yes	3-wire (Equiv. to NPN)	—	5 V	—	A96V	A96	—	●	—	●	—	—	—	IC circuit	—
			No	2-wire	24 V	12 V	100 V	A93V	A93	—	●	—	●	●	—	—	—	Relay, PLC
							100 V or less	A90V	A90	—	●	—	●	—	—	—	IC circuit	
			Yes				100 V, 200 V	—	B54		●	—	●	●	—	—	—	
			No				200 V or less	—	B64		●	—	●	—	—	—		
		Connector	Yes				—	—	C73C	—	●	—	●	●	●	—		
			No				24 V or less	—	C80C	—	●	—	●	●	●	—	IC circuit	
	Diagnostic indication (2-colour indication)	Grommet	Yes			—	—	—	B59W		●	—	●	—	—	—	—	

** Water resistant type auto switches can be mounted on the above models, but in such case SMC cannot guarantee water resistance. Please consult with SMC regarding water resistant types with the above model numbers.

* Lead wire length symbols: 0.5 m ····· — (Example) M9NW
1 m ····· M (Example) M9NWM
3 m ····· L (Example) M9NWL
5 m ····· Z (Example) M9NWZ
None ····· N (Example) H7CN

* Solid state auto switches marked with "○" are produced upon receipt of order.

* Since there are other applicable auto switches than listed above, refer to page 74 for details.
* For details about auto switches with pre-wired connector, refer to the **Auto Switch Guide**.
* The D-A9□□/M9□□□ auto switches are shipped together, (but not assembled). (However, only auto switch mounting brackets are assembled before shipment.)

Symbol

Rubber bumper

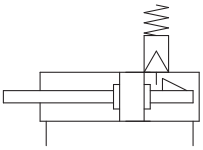

Air cushion

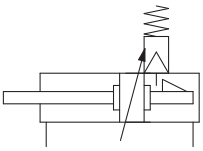

Made to Order
(For details, refer to pages 77 to 93.)

Symbol	Specifications
-XA□	Change of rod end shape
-XC13	Auto switch rail mounting

Refer to pages 68 to 74 for cylinders with auto switches.

- Auto switch proper mounting position (detection at stroke end) and its mounting height
- Minimum stroke for auto switch mounting
- Auto switch mounting brackets/Part no.
- Operating range
- Cylinder mounting bracket, by stroke/ Auto switch mounting surfaces

Specifications

Bore size [mm]	20	25	32	40	50	63	80	100
Action	Double acting, Single rod							
Lubricant	Not required (Non-lube)							
Fluid	Air							
Proof pressure	1.5 MPa							
Maximum operating pressure	1.0 MPa							
Minimum operating pressure	0.15 MPa*							
Ambient and fluid temperature	Without auto switch: –10 to 70 °C (No freezing) With auto switch: –10 to 60 °C (No freezing)							
Piston speed	50 to 1000 mm/s						50 to 700 mm/s	
Stroke length tolerance	Up to $1000^{st+1.4}_{0}$ mm, Up to $1200^{st+1.8}_{0}$ mm						Up to $1000^{st+1.4}_{0}$ mm Up to $1500^{st+1.8}_{0}$ mm	
Cushion	Rubber bumper, Air cushion							
Mounting**	Basic, Axial foot, Rod flange, Head flange, Rod trunnion, Head trunnion, Clevis (used for changing the port location by 90°)							

* 0.05 MPa except locking parts.
** Rod/Head trunnion types are not available for ø 80 and ø 100.
Trunnion is not attached for a cover on which lock mechanism is equipped.

Lock Specifications

Lock position	Head end, Rod end, Double end							
Holding force (Max.) [N]	ø 20	ø 25	ø 32	ø 40	ø 50	ø 63	ø 80	ø 100
	215	330	550	860	1340	2140	3450	5390
Backlash	2 mm or less							
Manual release	Non-locking type, Locking type							

Adjust the switch position so that it operates upon movement to both the stroke end and backlash (2 mm) positions.

Standard Strokes

Bore size [mm]	Standard stroke [mm] Note 1)	Long stroke [mm]	Maximum manufacturable stroke [mm]
20	25, 50, 75, 100, 125, 150, 200	201 to 350	1500
25	25, 50, 75, 100, 125, 150, 200, 250, 300	301 to 400	
32		301 to 450	
40		301 to 800	
50, 63		301 to 1200	
80		301 to 1400	
100		301 to 1500	

Note 1) Manufacture of intermediate strokes at 1 mm intervals is possible. (Spacers are not used.)
Note 2) Note 2) Long stroke applies to the axial foot style and the rod side flange style. If other mounting brackets are used, or the length exceeds the long stroke limit, the stroke should be determined based on the stroke selection table in the technical data.

Rod Boot Material

Symbol	Rod boot material	Maximum operating temperature
J	Nylon tarpaulin	70 °C
K	Heat resistant tarpaulin	110 °C*

* Maximum ambient temperature for the rod boot itself.

Construction: With Rubber Bumper

Head end lock

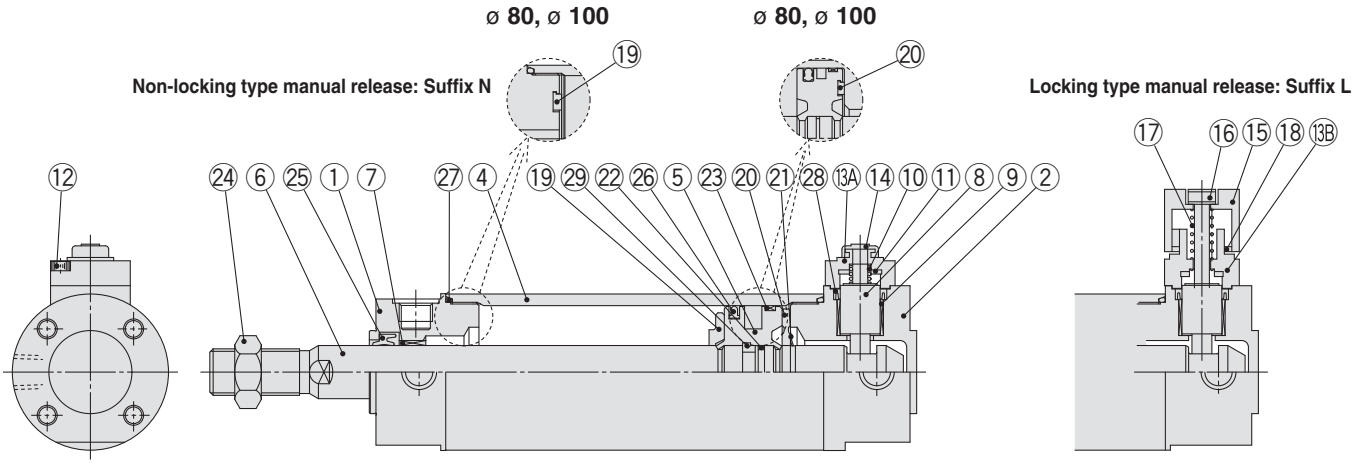

Rod end lock

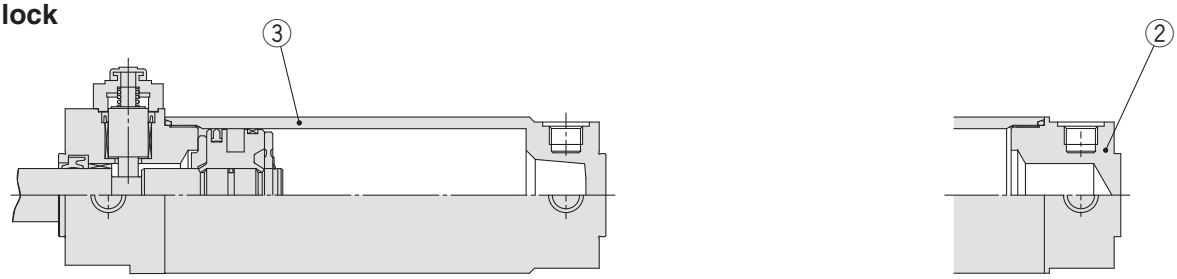

Long stroke

Component Parts

No.	Description	Material	Note
1	**Rod cover**	Aluminium alloy	Hard anodised
2	**Head cover**	Aluminium alloy	Hard anodised
3	**Tube cover**	Aluminium alloy	Hard anodised
4	**Cylinder tube**	Aluminium alloy	Hard anodised
5	**Piston**	Aluminium alloy	Chromated
6	**Piston rod**	Carbon steel*	Hard chrome plating*
7	**Bushing**	Bearing alloy	
8	**Lock piston**	Carbon steel	Hard chrome plating, Heat treated
9	**Lock bushing**	Copper alloy	
10	**Lock spring**	Stainless steel	
11	**Bumper**	Resin	
12	**Hexagon socket head cap screw**	Alloy steel	Black zinc chromated
13A	**Cap A**	Aluminium die-casted	Black painted
13B	**Cap B**	Carbon steel	Oxide film treated
14	**Rubber cap**	Synthetic rubber	

No.	Description	Material	Note
15	**M/O knob**	Zinc die-casted	Black painted
16	**M/O bolt**	Alloy steel	Black zinc chromated, Red painted
17	**M/O spring**	Steel wire	Zinc chromated
18	**Stopper ring**	Carbon steel	Zinc chromated
19	**Bumper A**	Resin	
20	**Bumper B**	Resin	ø 40 or larger: Same as bumper A
21	**Retaining ring**	Stainless steel	Not available for ø 80, ø 100
22	**Piston gasket**	NBR	
23	**Wear ring**	Resin	
24	**Rod end nut**	Carbon steel	Zinc chromated
25	**Rod seal**	NBR	
26	**Piston seal**	NBR	
27	**Cylinder tube gasket**	NBR	1 pc. when using tube cover
28	**Lock piston seal**	NBR	2 pcs. for double end lock
29	**Piston holder**	Resin	ø 40 to ø 100, head end lock only

Note) For cylinders with auto switches, the magnet is installed in the piston.
* The material for ø 20, ø 25 cylinders with auto switches is made of stainless steel.

Replacement Parts: Seal Kit (With one end lock)

Series	Bore size [mm]	Kit no.	Contents
CBG1□N Rubber bumper type	**20**	CBG1N20-PS	Set of the nos. ㉕, ㉖, ㉗, ㉘ and grease pack
	25	CBG1N25-PS	
	32	CBG1N32-PS	
	40	CBG1N40-PS	

Order seal kit in accordance with the bore size.
* The seal kit includes a grease pack (10 g). Order with the following part number when only the grease pack is needed.
Grease pack part number: GR-S-010 (10 g)

Replacement Parts: Seal Kit (With double end lock)

Series	Bore size [mm]	Kit no.	Contents
CBG1□N Rubber bumper type	**20**	CBG1N20-PS-W	Set of the nos. ㉕, ㉖, ㉗, ㉘ and grease pack
	25	CBG1N25-PS-W	
	32	CBG1N32-PS-W	
	40	CBG1N40-PS-W	

Order seal kit in accordance with the bore size.
* The seal kit includes a grease pack (10 g). Order with the following part number when only the grease pack is needed.
Grease pack part number: GR-S-010 (10 g)

⚠Caution

When disassembling cylinders with bore sizes of ø 20 through ø 40, grip the double flat part of either the tube cover or the rod cover with a vise and loosen the other side with a wrench or a monkey wrench etc., and then remove the cover. When re-tightening, tighten approximately 2 degrees more than the original position. (Cylinders with ø 50 or larger bore sizes are tightened with a large tightening torque and cannot be disassembled. If disassembly is required, please contact SMC.)

Construction: With Air Cushion

With air cushion
Head end lock

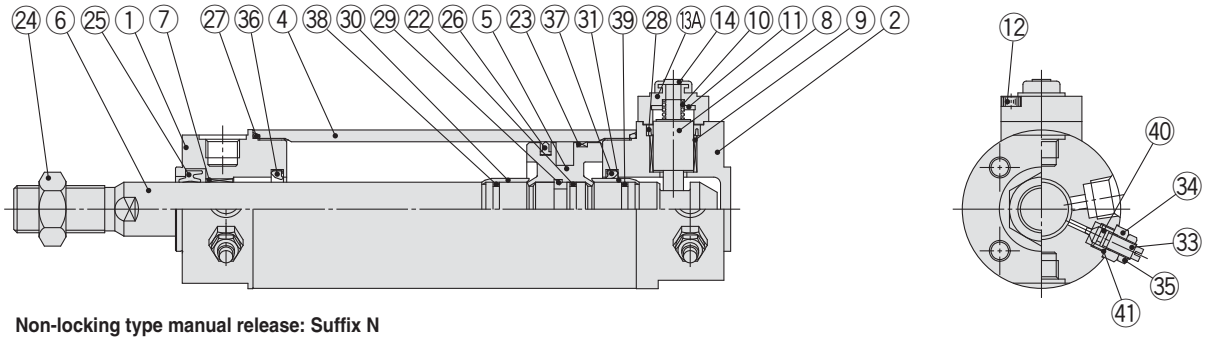

Non-locking type manual release: Suffix N

Rod end lock

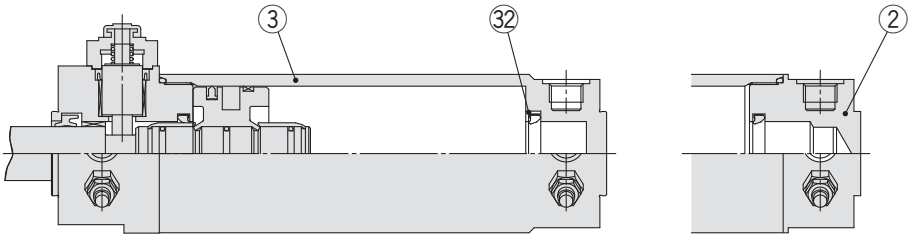

Long stroke

Component Parts

No.	Description	Material	Note
1	**Rod cover**	Aluminium alloy	Hard anodised
2	**Head cover**	Aluminium alloy	Hard anodised
3	**Tube cover**	Aluminium alloy	Hard anodised
4	**Cylinder tube**	Aluminium alloy	Hard anodised
5	**Piston**	Aluminium alloy	Chromated
6	**Piston rod**	Carbon steel*	Hard chrome plating*
7	**Bushing**	Bearing alloy	
8	**Lock piston**	Carbon steel	Hard chrome plating, Heat treated
9	**Lock bushing**	Copper alloy	
10	**Lock spring**	Stainless steel	
11	**Bumper**	Resin	
12	**Hexagon socket head cap screw**	Alloy steel	Black zinc chromated
13A	**Cap A**	Aluminium die-casted	Black painted
13B	**Cap B**	Carbon steel	Oxide film treated
14	**Rubber cap**	Synthetic rubber	
15	**M/O knob**	Zinc die-casted	Black painted
16	**M/O bolt**	Alloy steel	Black zinc chromated, Red painted
17	**M/O spring**	Steel wire	Zinc chromated
18	**Stopper ring**	Carbon steel	Zinc chromated

Note) For cylinders with auto switches, the magnet is installed in the piston.
* The material for ø 20, ø 25 cylinders with auto switches is made of stainless steel.

No.	Description	Material	Note
22	**Piston gasket**	NBR	
23	**Wear ring**	Resin	
24	**Rod end nut**	Carbon steel	Zinc chromated
25	**Rod seal**	NBR	
26	**Piston seal**	NBR	
27	**Cylinder tube gasket**	NBR	1 pc. when using tube cover
28	**Lock piston seal**	NBR	2 pcs. for double end lock
29	**Piston holder**	Resin	ø 40 to ø 100 only
30	**Cushion ring A**	Aluminium alloy	Anodised
31	**Cushion ring B**	Aluminium alloy	Anodised
32	**Seal retainer**	Rolled steel	Only when using nickel plating, tube cover
33	**Cushion valve**	Rolled steel	Electroless nickel plating
34	**Valve retainer**	Rolled steel	Electroless nickel plating
35	**Lock nut**	Rolled steel	Nickel plating
36	**Cushion seal A**	Urethane	
37	**Cushion seal B**	Urethane	ø 32 or larger: Same as A
38	**Cushion ring gasket A**	NBR	
39	**Cushion ring gasket B**	NBR	ø 32 or larger: Same as A
40	**Valve seal**	NBR	
41	**Valve retaining gasket**	NBR	

Replacement Parts: Seal Kit (With one end lock)

Series	Bore size [mm]	Kit no.	Contents
CBG1□A Air cushion type	**20**	CBG1A20-PS	Set of the nos. ㉕, ㉖, ㉗, ㉘, ㊵, ㊶ and grease pack
	25	CBG1A25-PS	
	32	CBG1A32-PS	
	40	CBG1A40-PS	

Order seal kit in accordance with the bore size.
* The seal kit includes a grease pack (10 g). Order with the following part number when only the grease pack is needed.
Grease pack part number: GR-S-010 (10 g)

Replacement Parts: Seal Kit (With double end lock)

Series	Bore size [mm]	Kit no.	Contents
CBG1□A Air cushion type	**20**	CBG1A20-PS-W	Set of the nos. ㉕, ㉖, ㉗, ㉘, ㊵, ㊶ and grease pack
	25	CBG1A25-PS-W	
	32	CBG1A32-PS-W	
	40	CBG1A40-PS-W	

Order seal kit in accordance with the bore size.
* The seal kit includes a grease pack (10 g). Order with the following part number when only the grease pack is needed.
Grease pack part number: GR-S-010 (10 g)

⚠Caution

When disassembling cylinders with bore sizes of ø 20 through ø 40, grip the double flat part of either the tube cover or the rod cover with a vise and loosen the other side with a wrench or a monkey wrench etc., and then remove the cover. When re-tightening, tighten approximately 2 degrees more than the original position. (Cylinders with ø 50 or larger bore sizes are tightened with a large tightening torque and cannot be disassembled. If disassembly is required, please contact SMC.)

Basic with Rubber Bumper: CBG1BN

Head end lock: CBG1BN Bore size — Stroke — H□

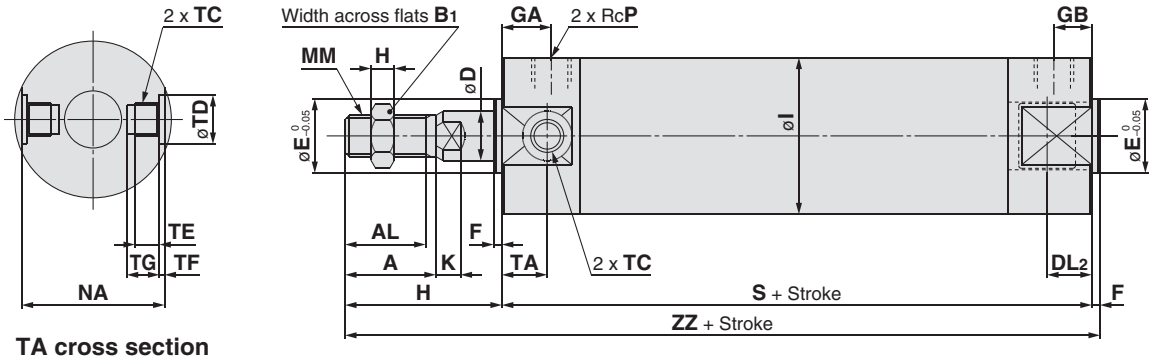

Non-locking type manual release: Suffix N

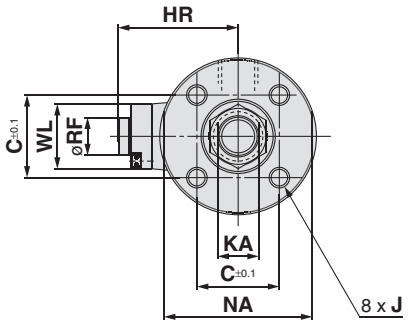

Locking type manual release: Suffix L

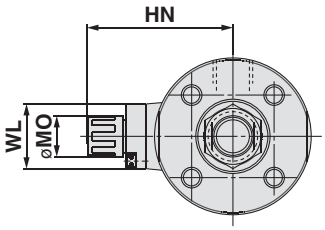

[mm]

Bore size [mm]	Stroke range	A	AL	B_1	C	D	DL_2	E	F	GA	GB	H	H_1	HR	HN (Max.)	I	J
20	Up to 350	18	15.5	13	14	8	12.5	12	2	12	12	35	5	25.3	37	26	M4 x 0.7 depth 7
25	Up to 400	22	19.5	17	16.5	10	12.5	14	2	12	12	40	6	28.3	40	31	M5 x 0.8 depth 7.5
32	Up to 450	22	19.5	17	20	12	12	18	2	12	12	40	6	31.3	43	38	M5 x 0.8 depth 8
40	Up to 800	30	27	19	26	16	15	25	2	13	13	50	8	38.3	52.5	47	M6 x 1 depth 12
50	Up to 1200	35	32	27	32	20	16.5	30	2	14	14	58	11	44.5	58.5	58	M8 x 1.25 depth 16
63	Up to 1200	35	32	27	38	20	16.5	32	2	14	14	58	11	45	59	72	M10 x 1.5 depth 16
80	Up to 1400	40	37	32	50	25	19	40	3	20	20	71	13	53.5	68	89	M10 x 1.5 depth 22
100	Up to 1500	40	37	41	60	30	20	50	3	20	20	71	16	64.5	79	110	M12 x 1.75 depth 22

Bore size [mm]	K	KA	MM	MO	NA	P	RF	S	TA	TC	TD	TE	TF	TG	WL	ZZ
20	5	6	M8 x 1.25	15	24	1/8	11	81	11	M5 x 0.8	$8^{+0.08}_{0}$	4	0.5	5.5	15	118
25	5.5	8	M10 x 1.25	15	29	1/8	11	81	11	M6 x 0.75	$10^{+0.08}_{0}$	5	1	6.5	15	123
32	5.5	10	M10 x 1.25	15	35.5	1/8	11	81	11	M8 x 1.0	$12^{+0.08}_{0}$	5.5	1	7.5	24	123
40	6	14	M14 x 1.5	19	44	1/8	11	92	12	M10 x 1.25	$14^{+0.08}_{0}$	6	1.25	8.5	24	144
50	7	18	M18 x 1.5	19	55	1/4	11	107	13	M12 x 1.25	$16^{+0.08}_{0}$	7.5	2	10	24	167
63	7	18	M18 x 1.5	19	69	1/4	11	107	13	M14 x 1.5	$18^{+0.08}_{0}$	11.5	3	14.5	24	167
80	10	22	M22 x 1.5	23	80	3/8	21	130	—	—	—	—	—	—	40	204
100	10	26	M26 x 1.5	23	100	1/2	21	130	—	—	—	—	—	—	40	204

Basic with Rubber Bumper: CBG1BN

Rod end lock: CBG1BN Bore size — Stroke — R□

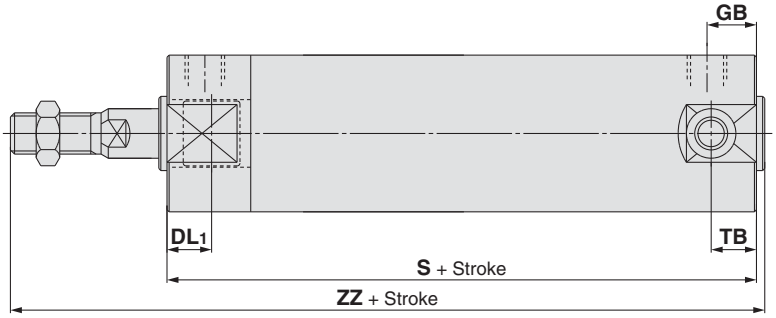

[mm]

Bore size [mm]	DL1	GB	S	TB	ZZ
20	19.5	10 (12)	80 (88)	11	117 (125)
25	19.5	10 (12)	80 (88)	11	122 (130)
32	20	10 (12)	81 (89)	10 (11)	123 (131)
40	19	10 (13)	87 (96)	10 (12)	139 (148)
50	23.5	12 (14)	102 (114)	12 (13)	162 (174)
63	23.5	12 (14)	102 (114)	12 (13)	162 (174)
80	27	16 (20)	124 (138)	—	198 (212)
100	30	16 (20)	124 (138)	—	198 (212)

∗ ( ): Denotes the dimensions for long stroke.

Double end lock: CBG1BN Bore size — Stroke — W□

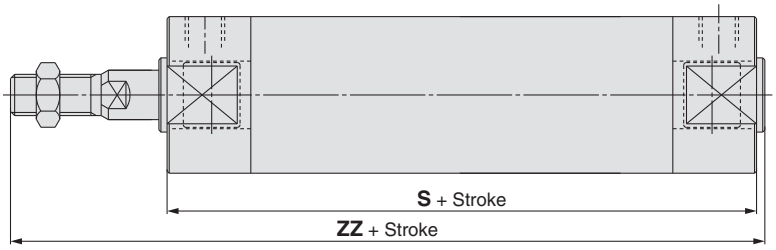

[mm]

Bore size [mm]	S	ZZ
20	92	129
25	92	134
32	91	133
40	101	153
50	119	179
63	119	179
80	146	220
100	146	220

With rod boot

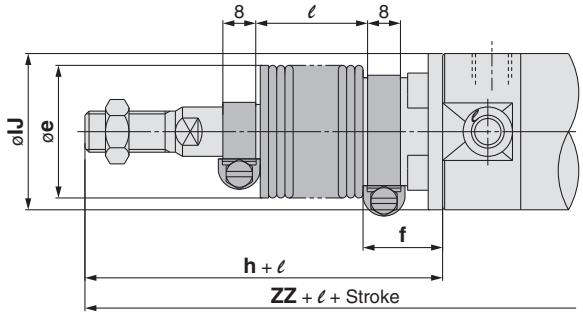

ø 20 to ø 63

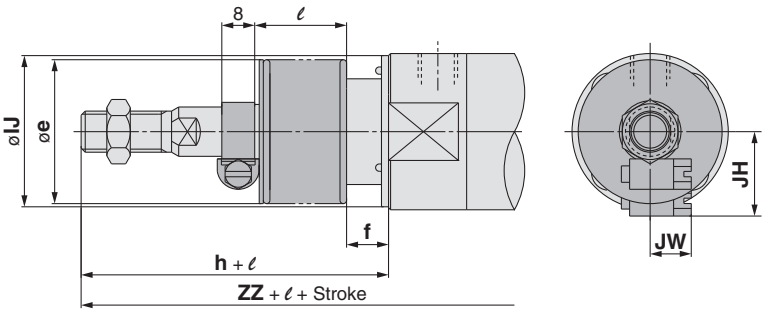

ø 80, ø 100

[mm]

Bore size [mm]	e	f	h	IJ	JH (Reference)	JW (Reference)	ℓ	Head end lock: -H□ ZZ	Rod end lock: -R□ ZZ	Double end lock: -W□ ZZ
20	30	18	55	27	15.5	10.5	1/4 stroke	138	137 (145)	149
25	30	19	62	32	16.5	10.5		145	144 (152)	156
32	35	19	62	38	18.5	10.5		145	145 (153)	155
40	35	19	70	48	21.5	10.5		164	159 (168)	173
50	40	19	78	59	24	10.5		187	182 (194)	199
63	40	20	78	72	24	10.5		187	182 (194)	199
80	52	10	80	59	—	—		213	207 (221)	229
100	62	7	80	71	—	—		213	207 (221)	229

∗ ( ): Denotes the dimensions for long strokes.
∗∗ The minimum stroke with rod boot is 20 mm.

Basic with Air Cushion: CBG1BA

Head end lock: CBG1BA Bore size — Stroke — H□
Rod end lock: CBG1BA Bore size — Stroke — R□

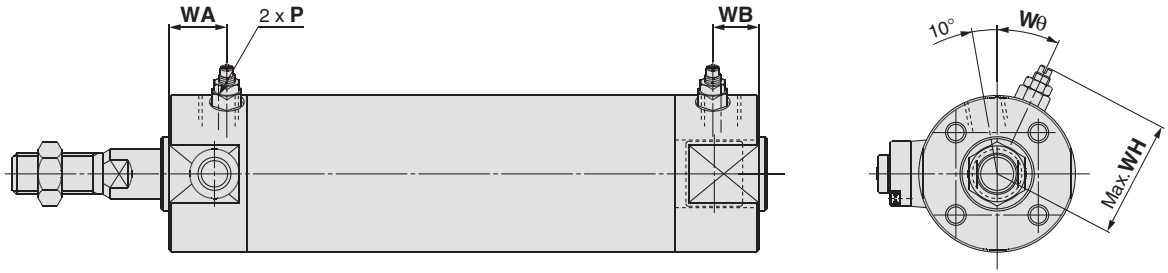

Head End Lock: -H□

[mm]

Bore size [mm]	P	WA	WB	WH	Wθ
20	M5 x 0.8	16	16	23	30°
25	M5 x 0.8	16	16	25	30°
32	Rc1/8	16	16	28.5	25°
40	Rc1/8	16	16	33	20°
50	Rc1/4	18	18	40.5	20°
63	Rc1/4	18	18	47.5	20°
80	Rc3/8	22	22	60.5	20°
100	Rc1/2	22	22	71	20°

∗ For dimensions other than listed above, refer to the dimensions with rubber bumper.

Rod End Lock: -R□

[mm]

Bore size [mm]	P	WA	WB	WH	Wθ
20	M5 x 0.8	16	15 (16)	23	30°
25	M5 x 0.8	16	15 (16)	25	30°
32	Rc1/8	16	15 (16)	28.5	25°
40	Rc1/8	16	15 (16)	33	20°
50	Rc1/4	18	17 (18)	40.5	20°
63	Rc1/4	18	17 (18)	47.5	20°
80	Rc3/8	22	22	60.5	20°
100	Rc1/2	22	22	71	20°

∗ ( ): Denotes the dimensions for long strokes.
∗∗ For dimensions other than the listed above, refer to the dimensions with rubber bumper.

With Mounting Bracket

(For dimensions other than listed below, refer to pages 60 to 62, 14 to 16.)

Axial foot: CBG1L□

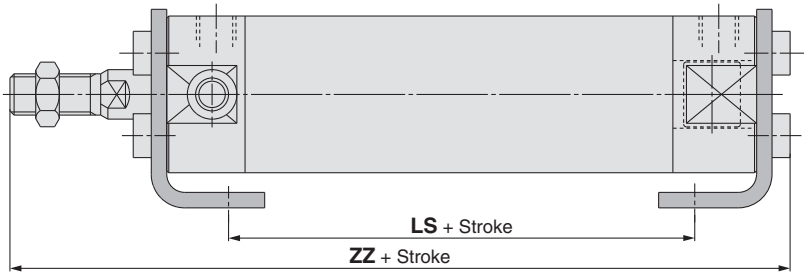

[mm]

Bore size [mm]	Head end lock: -H□			Rod end lock: -R□			Double end lock: -W□		
	LS	ZZ		LS	ZZ		LS	ZZ	
	—	Without rod boot	With rod boot	—	Without rod boot	With rod boot	—	Without rod boot	With rod boot
20	57	122	142 + ℓ	56 (64)	121 (129)	141 (149) + ℓ	68	133	153 + ℓ
25	57	127.5	149.5 + ℓ	56 (64)	126.5 (134.5)	148.5 (156.5) + ℓ	68	138.5	160.5 + ℓ
32	55	127.5	149.5 + ℓ	55 (63)	127.5 (135.5)	149.5 (157.5) + ℓ	65	137.5	159.5 + ℓ
40	65	149	169 + ℓ	60 (69)	144 (153)	164 (173) + ℓ	74	158	178 + ℓ
50	72	174.5	194.5 + ℓ	67 (79)	169.5 (181.5)	189.5 (201.5) + ℓ	84	186.5	206.5 + ℓ
63	72	174.5	194.5 + ℓ	67 (79)	169.5 (181.5)	189.5 (201.5) + ℓ	84	186.5	206.5 + ℓ
80	82	210.5	219.5 + ℓ	76 (90)	204.5 (218.5)	213.5 (227.5) + ℓ	98	226.5	235.5 + ℓ
100	82	214	223 + ℓ	76 (90)	208 (222)	217 (231) + ℓ	98	230	239 + ℓ

∗ ( ): Denotes the dimensions for long stroke.

Rod flange: CBG1F□

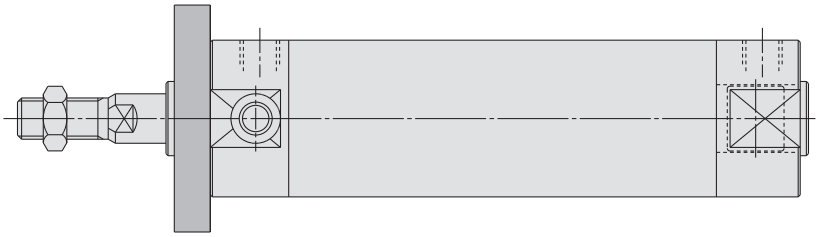

Head flange: CBG1G□

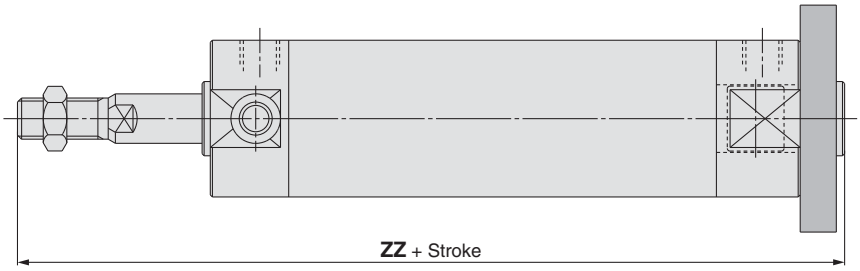

[mm]

Bore size [mm]	Head end lock: -H□		Rod end lock: -R□		Double end lock: -W□	
	ZZ (Head flange)					
	Without rod boot	With rod boot	Without rod boot	With rod boot	Without rod boot	With rod boot
20	124	144 + ℓ	123	143 + ℓ	135	155 + ℓ
25	130	152 + ℓ	129	151 + ℓ	141	163 + ℓ
32	130	152 + ℓ	130	152 + ℓ	140	162 + ℓ
40	152	172 + ℓ	147 (156)	167 (176) + ℓ	161	181 + ℓ
50	176	196 + ℓ	171 (183)	191 (203) + ℓ	188	208 + ℓ
63	176	196 + ℓ	171 (183)	191 (203) + ℓ	188	208 + ℓ
80	215	224 + ℓ	209 (223)	218 (232) + ℓ	231	240 + ℓ
100	218	227 + ℓ	212 (226)	221 (235) + ℓ	234	243 + ℓ

∗ ( ): Denotes the dimensions for long stroke.

With Mounting Bracket

Rod trunnion: CBG1U□
(Head end lock -H□ only)

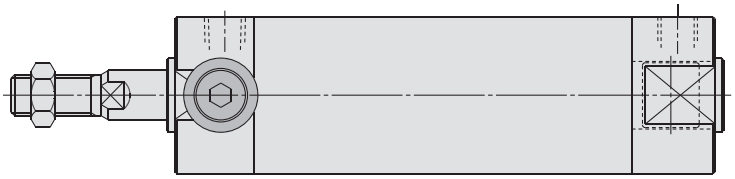

[mm]

Bore size [mm]	Rod end lock: -R□			
	Z (Head trunnion)		ZZ (Head trunnion)	
	Without rod boot	With rod boot	Without rod boot	With rod boot
20	104	124 + ℓ	117	137 + ℓ
25	109	131 + ℓ	122	144 + ℓ
32	111	133 + ℓ	123	145 + ℓ
40	127 (134)	147 (154) + ℓ	139 (148)	159 (168) + ℓ
50	148 (159)	168 (179) + ℓ	162 (174)	182 (194) + ℓ
63	148 (159)	168 (179) + ℓ	162 (174)	182 (194) + ℓ

∗ ( ): Denotes the dimensions for long stroke.

Head trunnion: CBG1T□
(Rod end lock -R□ only)

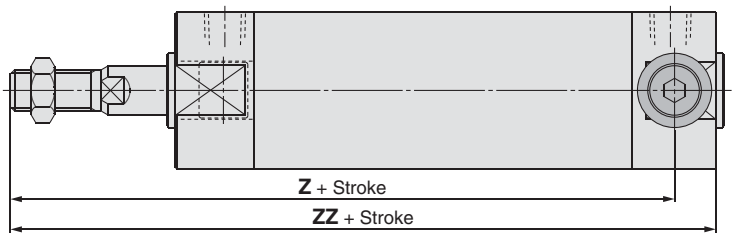

Clevis: CBG1D□
ø 20 to ø 63

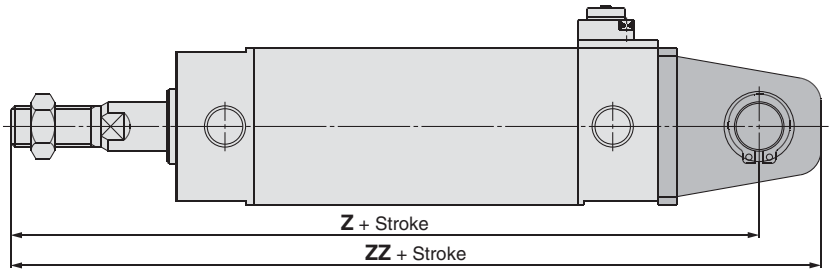

Clevis: CBG1D□
ø 80, ø 100

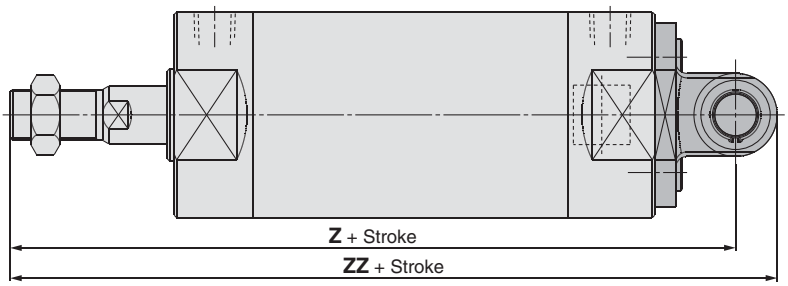

[mm]

Bore size [mm]	Head end lock: -H□				Rod end lock: -R□			
	Z		ZZ		Z		ZZ	
	Without rod boot	With rod boot	Without rod boot	With rod boot	Without rod boot	With rod boot	Without rod boot	With rod boot
20	130	150 + ℓ	141	161 + ℓ	129	149 + ℓ	140	160 + ℓ
25	137	159 + ℓ	150	172 + ℓ	136	158 + ℓ	149	171 + ℓ
32	141	163 + ℓ	156	178 + ℓ	141	163 + ℓ	156	178 + ℓ
40	164	184 + ℓ	182	202 + ℓ	159 (168)	179 (188) + ℓ	177 (186)	197 (206) + ℓ
50	190	210 + ℓ	210	230 + ℓ	185 (197)	205 (217) + ℓ	205 (217)	225 (237) + ℓ
63	195	215 + ℓ	217	237 + ℓ	190 (202)	210 (222) + ℓ	212 (224)	232 (244) + ℓ
80	236	245 + ℓ	254	263 + ℓ	230 (244)	239 (253) + ℓ	248 (262)	257 (277) + ℓ
100	244	253 + ℓ	266	275 + ℓ	238 (252)	247 (261) + ℓ	260 (274)	269 (283) + ℓ

Bore size [mm]	Double end lock: -W□			
	Z		ZZ	
	Without rod boot	With rod boot	Without rod boot	With rod boot
20	141	161 + ℓ	152	172 + ℓ
25	148	170 + ℓ	161	183 + ℓ
32	151	173 + ℓ	166	188 + ℓ
40	173	193 + ℓ	191	211 + ℓ
50	202	222 + ℓ	222	242 + ℓ
63	207	227 + ℓ	229	249 + ℓ
80	252	261 + ℓ	270	279 + ℓ
100	260	269 + ℓ	282	291 + ℓ

∗ ( ): Denotes the dimensions for long stroke.

Specific Product Precautions 1

Be sure to read this before handling. Refer to the back cover for Safety Instructions. For Actuator and Auto Switch Precautions, refer to "Handling Precautions for SMC Products" and the Operation Manual on SMC website, http://www.smc.eu

Use the Recommended Pneumatic Circuit

⚠Caution

- **This is necessary for proper operation and release of the lock.**

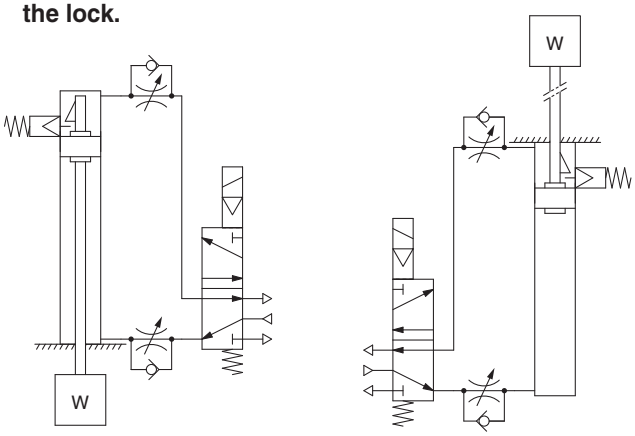

Head end lock　　Rod end lock

Handling

⚠Caution

1. **Do not use 3 position solenoid valves.**
   Avoid use in combination with 3 position solenoid valves (especially closed center metal seal types). If pressure is trapped in the port on the lock mechanism side, the cylinder cannot be locked. Furthermore, even after being locked, the lock may be released after some time, due to air leaking from the solenoid valve and entering the cylinder.
2. **Back pressure is required when releasing the lock.**
   Be sure air is supplied to the side of the cylinder without a lock mechanism, (side of the piston rod without lock for double end lock), before starting up, as in the above figures. Otherwise, the lock may not be released. (Refer to "Releasing the Lock".)
3. **Release the lock when mounting or adjusting the cylinder.**
   If mounting or other work is performed when the cylinder is locked, the lock unit may be damaged.
4. **Operate with a load ratio of 50 % or less.**
   If the load ratio exceeds 50 %, this may cause problems such as failure of the lock to release, or damage to the lock unit.
5. **Do not operate multiple cylinders in synchronization.**
   Avoid applications in which two or more cylinders with end lock are synchronized to move one workpiece, as one of the cylinder locks may not be able to release when required.
6. **Use a speed controller with meter-out control.**
   Lock cannot be released occasionally by meter-in control.
7. **Be sure to operate completely to the cylinder stroke end on the side with the lock.**
   If the cylinder piston does not reach the end of the stroke, locking and unlocking may not be possible.
8. **Do not use the air cylinder as an air-hydro cylinder.**
   This may result in oil leak.
9. **Install a rod boot without twisting.**
   If the cylinder is installed with its bellows twisted, it could damage the bellows.
10. **Adjust an auto switch position so that it operates for movement to both the stroke end and backlash (2 mm) positions.**
    When a 2-colour indication switch is adjusted for green indication at the stroke end, it may change to red for the backlash return, but this is not abnormal.

Handling

⚠Warning

1. **Do not operate the cushion valve in the fully closed or fully opened state.**
   Using it in the fully closed state will cause the cushion seal to be damaged. Using it in the fully opened state will cause the piston rod assembly or the cover to be damaged.
2. **Operate within the specified cylinder speed.**
   Otherwise, cylinder and seal damage may occur.

Operating Pressure

⚠Caution

1. Supply air pressure of 0.15 MPa or higher to the port on the lock mechanism side, as it is necessary for releasing the lock.

Exhaust Speed

⚠Caution

1. The lock will be engaged automatically if the pressure applied to the port on the lock mechanism side falls to 0.05 MPa or less. In cases where the piping on the lock mechanism side is long and thin, or the speed controller is separated at some distance from the cylinder port, the exhaust speed will be reduced. Take note that some time may be required for the lock to engage. In addition, clogging of a silencer mounted on the solenoid valve exhaust port can produce the same effect.

Relation to Cushion

⚠Caution

1. When cushion valve at lock mechanism side is fully opened or closed, piston rod may not be reached at stroke end. Thus, lock is not established. And when locking is done at cushion valve fully closed, adjust cushion valve since lock may not be released.

Releasing the Lock

⚠Warning

1. Before releasing the lock, be sure to supply air to the side without a lock mechanism, so that there is no load applied to the lock mechanism when it is released. (Refer to the recommended pneumatic circuits.) If the lock is released when the port on the other side is in an exhaust state, and with a load applied to the lock unit, the lock unit may be subjected to an excessive force and be damaged. Furthermore, sudden movement of the piston rod is very dangerous.

Disassembly/Replacement

⚠Caution

1. **Do not replace the bushings.**
   The bushings are press-fit. To replace them, they must be replaced together with the cover assembly.
2. **To replace a seal, apply grease to the new seal before installing it.**
   If the cylinder is put into operation without applying grease to the seal, it could cause the seal to wear significantly, leading to premature air leakage.
3. **Cylinders with ø 50 or larger bore sizes cannot be disassembled.**
   When disassembling cylinders with bore sizes of ø 20 through ø 40, grip the double flat part of either the tube cover or the rod cover with a vise and loosen the other side with a wrench or a monkey wrench etc., and then remove the cover. When re-tightening, tighten approximately 2 degrees more than the original position. (Cylinders with ø 50 or larger bore sizes are tightened with a large tightening torque and cannot be disassembled. If disassembly is required, please contact SMC.)

Specific Product Precautions 2

Be sure to read this before handling. Refer to the back cover for Safety Instructions. For Actuator and Auto Switch Precautions, refer to "Handling Precautions for SMC Products" and the Operation Manual on SMC website, http://www.smc.eu

Manual Release

⚠Caution

1. Non-locking type manual release

Insert the accessory bolt from the top of the rubber cap (it is not necessary to remove the rubber cap), and after screwing it into the lock piston, pull it to release the lock. If you stop pulling the bolt, the lock will return to an operational state.

Thread sizes, pulling forces and strokes are as shown below.

Bore size [mm]	Thread size	Pulling force	Stroke [mm]
20, 25, 32	M2.5 x 0.45 x 25 L or more	4.9 N	2
40, 50, 63	M3 x 0.5 x 30 L or more	10 N	3
80, 100	M5 x 0.8 x 40 L or more	24.5 N	3

Remove the bolt for normal operation.
It can cause lock malfunction or faulty release.

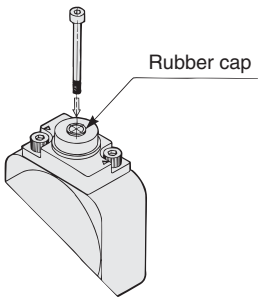

2. Locking type manual release

While pushing the M/O knob, turn it 90° counterclockwise. The lock is released (and remains in a released state) by aligning the ▲mark on the cap with the ▼OFF mark on the M/O knob.
When locking is desired, turn the M/O knob 90° clockwise while pushing completely down, and align the ▲mark on the cap with the ▼ON mark on the M/O knob. The correct position is confirmed by a clicking sound.
Failure to click it into place properly can cause the lock to disengage.

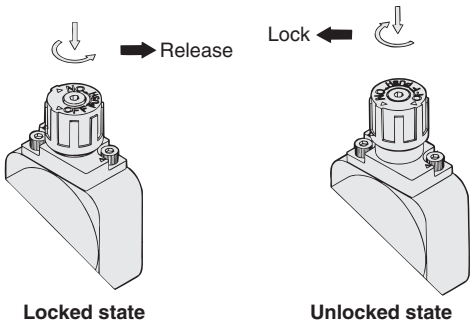

Working Principle

∗ The figures below are the same as those for Series CBA2.

●Head end lock (Rod end lock is the same.)

1. When the piston rod is getting closer to the stroke end, the taper part (∗) of the piston rod edge will push the lock piston up.

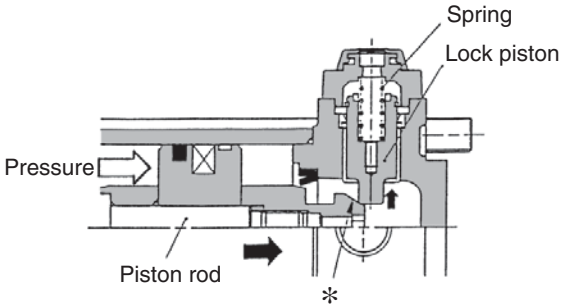

2. The lock piston is pushed up further.

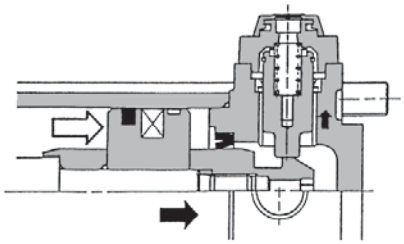

3. The lock piston is pushed up into the groove of the piston rod to lock it. (The lock piston is pushed up by spring force.) At this time, it is exhausted from the port on the head side and introduced into the atmosphere.

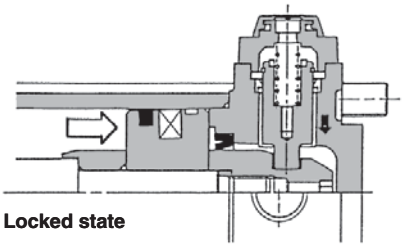

4. When pressure is supplied in the head side, lock piston will be pushed up to release the lock.

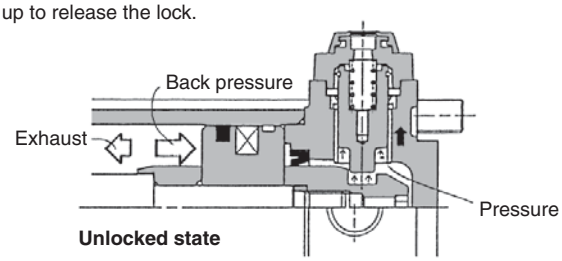

5. When the lock is released, the cylinder will move forward.

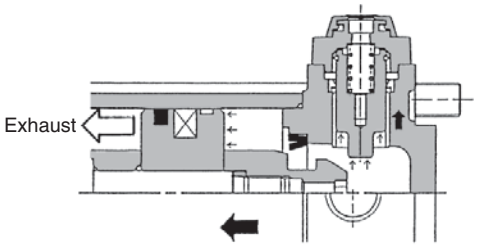

Auto Switch Mounting

Auto Switch Proper Mounting Position (Detection at Stroke End) and Its Mounting Height

Solid state auto switch
D-M9□/M9□W, D-M9□A
ø 20 to ø 63

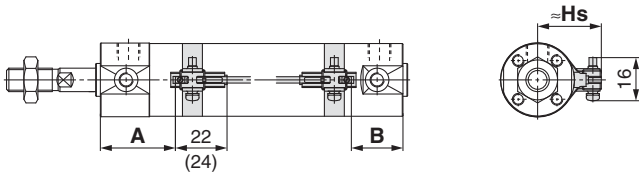

( ): Dimension of the D-M9□A
A and B are the dimensions from the end of the head cover/rod cover to the end of the auto switch.

D-M9□V/M9□WV, D-M9□AV
ø 20 to ø 63

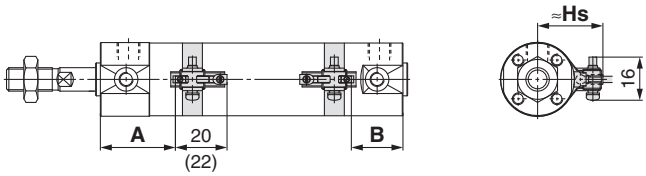

( ): Dimension of the D-M9□AV
A and B are the dimensions from the end of the head cover/rod cover to the end of the auto switch.

D-G5/K5/G5□W/G5BA
D-K59W, D-G59F, D-G5NT
ø 20 to ø 100

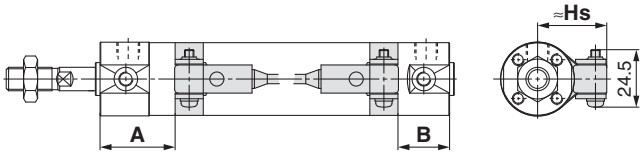

D-H7□/H7□W
D-H7NF/H7BA/D-H7C
ø 20 to ø 63

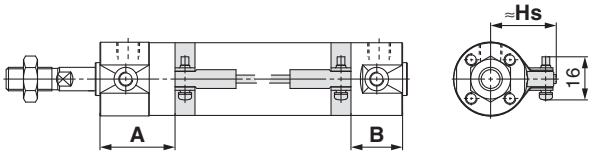

Reed auto switch
D-A9□
ø 20 to ø 63

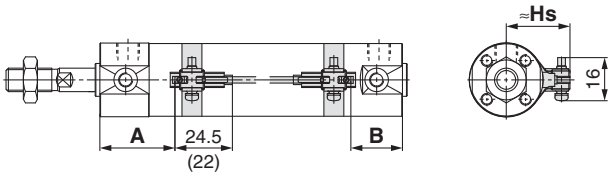

( ): Dimension of the D-A96
A and B are the dimensions from the end of the head cover/rod cover to the end of the auto switch.

D-A9□V
ø 20 to ø 63

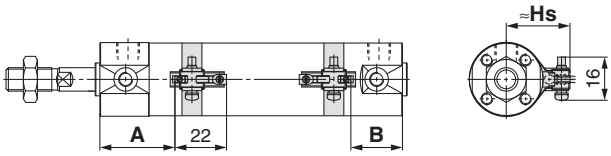

A and B are the dimensions from the end of the head cover/rod cover to the end of the auto switch.

D-C7/C8, D-C73C/C80C
ø 20 to ø 63

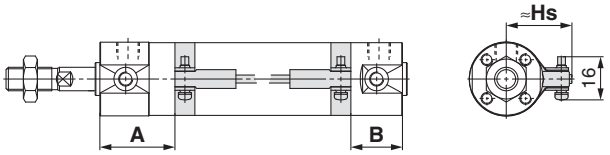

D-B5/B6/B59W
ø 20 to ø 100

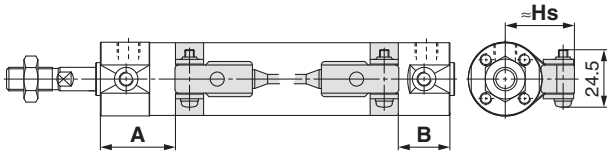

Auto Switch Mounting Height

[mm]

Auto switch model / Bore size	D-M9□(V) D-M9□W(V) D-M9□A(V) D-A9□(V) D-H7□ D-H7□W D-H7NF D-H7BA D-C7/C8	D-C73C D-C80C	D-G5/K5 D-G5□W D-K59W D-B5/B6 D-B59W D-G5NT D-G59F D-H7C D-G5BA
	Hs	Hs	Hs
20	26.5	27	27.5
25	29	29.5	30
32	32.5	33	33.5
40	37	37.5	38
50	42.5	43	43.5
63	49.5	50	50.5
80	—	—	59
100	—	—	69.5

Auto Switch Proper Mounting Position (Detection at Stroke End)

Except Single Acting, Direct Mount Type (CG1R, CG1KR) and With End Lock (CBG1)

[mm]

Auto switch model / Bore size	D-M9□ D-M9□V D-M9□W D-M9□WV D-M9□A D-M9□AV		D-A9□ D-A9□V		D-H7□W D-H7NF D-H7BA D-H7□ D-H7C		D-C7□ D-C80 D-C73C D-C80C		D-G5□/K59 D-G5□W/K59W D-G59F D-G5NT D-G5BA		D-B5□ D-B64		D-B59W	
	A	B	A	B	A	B	A	B	A	B	A	B	A	B
20	33	24 (32)	29	20 (28)	28.5	19.5 (27.5)	29.5	20.5 (28.5)	25	16 (24)	23.5	14.5 (22.5)	26.5	17.5 (25.5)
25	32.5	24.5 (32.5)	28.5	20.5 (28.5)	28	20 (28)	29	21 (29)	24.5	16.5 (24.5)	23	15 (23)	26	18 (26)
32	34	25 (33)	30	21 (29)	29.5	20.5 (28.5)	30.5	21.5 (29.5)	26	17 (25)	24.5	15.5 (23.5)	27.5	18.5 (26.5)
40	39	27 (36)	35	23 (32)	34.5	22.5 (31.5)	35.5	23.5 (32.5)	31	19 (28)	29.5	17.5 (26.5)	32.5	20.5 (29.5)
50	46	32 (44)	42	28 (40)	41.5	27.5 (39.5)	42.5	28.5 (40.5)	38	24 (36)	36.5	22.5 (34.5)	39.5	25.5 (37.5)
63	44.5	33.5 (45.5)	40.5	29.5 (41.5)	40	29 (41)	41	30 (42)	36.5	25.5 (37.5)	35	24 (36)	38	27 (39)
80	—	—	—	—	—	—	—	—	49.5	30.5 (44.5)	48	29 (43)	51	32 (46)
100	—	—	—	—	—	—	—	—	48.5	31.5 (45.5)	47	30 (44)	50	33 (47)

Note 1) The values in ( ) are for long stroke.
Note 2) Adjust the auto switch after confirming the operating condition in the actual setting.

Single Acting, Spring Return Type (S)

Auto switch model	Bore size	A dimensions				B
		Up to 50 st	51 to 100 st	101 to 125 st	126 to 200 st	
D-M9□(V) **D-M9□W(V)** **D-M9□A(V)**	20	58	83	108	—	24
	25	57.5	82.5	107.5	132.5	24.5
	32	59	84	109	134	25
	40	64	89	114	139	27
D-A9□(V)	20	54	79	104	—	20
	25	53.5	78.5	103.5	128.5	20.5
	32	55	80	105	130	21
	40	60	85	110	135	23
D-H7□ **D-H7□W** **D-H7C** **D-H7BA** **D-H7NF**	20	53.5	78.5	103.5	—	19.5
	25	53	78	103	128	20
	32	54.5	79.5	109.5	129.5	20.5
	40	59.5	84.5	109.5	134.5	22.5
D-C7□ **D-C80** **D-C73C** **D-C80C**	20	54.5	79.5	104.5	—	20.5
	25	54	79	104	129	21
	32	55.5	80.5	105.5	130.5	21.5
	40	60.5	85.5	110.5	135.5	23.5
D-G5NT **D-G59F**	20	50	75	100	—	16
	25	49.5	74.5	99.5	124.5	16.5
	32	51	76	101	126	17
	40	56	81	106	131	19
D-B5□ **D-B64**	20	48.5	73.5	98.5	—	14.5
	25	48	73	98	123	15
	32	49.5	74.5	99.5	124.5	15.5
	40	54.5	79.5	104.5	129.5	17.5
D-B59W	20	51.5	76.5	101.5	—	17.5
	25	51	76	101	126	18
	32	52.5	77.5	102.5	127.5	18.5
	40	57.5	82.5	107.5	132.5	20.5

Note) Adjust the auto switch after confirming the operating condition in the actual setting.

Auto Switch Proper Mounting Position (Detection at Stroke End)

Single Acting, Spring Extend Type (T)

[mm]

Auto switch model	Bore size	A	B dimensions			
			Up to 50 st	51 to 100 st	101 to 125 st	126 to 200 st
D-M9□(V) D-M9□W(V) D-M9□A(V)	20	33	49	74	99	—
	25	32.5	49.5	74.5	99.5	124.5
	32	34	50	75	100	125
	40	39	52	77	102	127
D-A9□(V)	20	29	45	70	95	—
	25	28.5	45.5	70.5	95.5	120.5
	32	30	46	71	96	121
	40	35	48	73	98	123
D-H7□ D-H7□W D-H7C D-H7BA D-H7NF	20	28.5	44.5	69.5	94.5	—
	25	28	45	70	95	120
	32	29.5	45.5	70.5	95.5	120.5
	40	34.5	47.5	72.5	97.5	122.5
D-C7□ D-C80 D-C73C D-C80C	20	29.5	45.5	70.5	95.5	—
	25	29	46	71	96	121
	32	30.5	46.5	71.5	96.5	121.5
	40	35.5	48.5	73.5	98.5	123.5
D-G5NT D-G59F	20	25	41	66	91	—
	25	24.5	41.5	66.5	91.5	116.5
	32	26	42	67	92	117
	40	31	44	69	94	119
D-B5□ D-B64	20	23.5	39.5	64.5	89.5	—
	25	23	40	65	90	115
	32	24.5	40.5	65.5	90.5	115.5
	40	29.5	42.5	67.5	92.5	117.5
D-B59W	20	26.5	42.5	67.5	92.5	—
	25	26	43	68	93	118
	32	27.5	43.5	68.5	93.5	118.5
	40	32.5	45.5	70.5	95.5	120.5

Note) Adjust the auto switch after confirming the operating condition in the actual setting.

Direct Mount Type (CG1R, CG1KR)

[mm]

Auto switch model / Bore size	D-M9□ D-M9□V D-M9□W D-M9□WV D-M9□A D-M9□AV		D-A9□ D-A9□V		D-H7□W D-H7NF D-H7BA D-H7□ D-H7C		D-C7□ D-C80 D-C73C D-C80C		D-G59F D-G5NT		D-B5□ D-B64		D-B59W	
	A	B	A	B	A	B	A	B	A	B	A	B	A	B
20	12	24	8	20	7.5	19.5	8.5	20.5	4	16	2.5	14.5	5.5	17.5
25	11.5	24.5	7.5	20.5	7	20	8	21	3.5	16.5	2	15	5	18
32	13	25	9	21	8.5	20.5	9.5	21.5	5	17	3.5	15.5	6.5	18.5
40	18	27	14	23	13.5	22.5	14.5	23.5	10	19	8.5	17.5	11.5	20.5
50	20	32	16	28	15.5	27.5	16.5	28.5	12	24	10.5	22.5	13.5	25.5
63	18.5	33.5	14.5	29.5	14	29	15	30	10.5	25.5	9	24	12	27

Note) Adjust the auto switch after confirming the operating condition in the actual setting.

Auto Switch Proper Mounting Position (Detection at Stroke End)

With End Lock (CBG1)

[mm]

Auto switch model / Bore size	Lock position	D-M9□ D-M9□V D-M9□W D-M9□WV D-M9□A D-M9□AV		D-A9□ D-A9□V		D-H7□ D-H7C D-H7□W D-H7BA D-H7NF		D-G5□W D-K59W D-G59F D-G5 D-K5 D-G5NT D-G5BA		D-C7 D-C8 D-C73C D-C80C		D-B5 D-B6		D-B59W	
		A	B	A	B	A	B	A	B	A	B	A	B	A	B
20	Head end	33	36	29	32	28.5	31.5	25	28	29.5	32.5	23.5	26.5	26.5	29.5
	Rod end	44	24 (32)	40	20 (28)	39.5	19.5 (27.5)	36	16 (24)	40.5	20.5 (28.5)	34.5	14.5 (22.5)	37.5	17.5 (25.5)
	Double end	44	36	40	32	39.5	31.5	36	28	40.5	32.5	34.5	26.5	37.5	29.5
25	Head end	33	36	29	32	28.5	31.5	25	28	29.5	32.5	23.5	26.5	26.5	29.5
	Rod end	44	24 (32)	40	20 (28)	39.5	19.5 (27.5)	36	16 (24)	40.5	20.5 (28.5)	34.5	14.5 (22.5)	37.5	17.5 (25.5)
	Double end	44	36	40	32	39.5	31.5	36	28	40.5	32.5	34.5	26.5	37.5	29.5
32	Head end	34	35	30	31	29.5	30.5	26	27	30.5	31.5	24.5	25.5	27.5	28.5
	Rod end	44	25 (33)	40	21 (29)	39.5	20.5 (28.5)	36	17 (25)	40.5	21.5 (29.5)	34.5	15.5 (23.5)	37.5	18.5 (26.5)
	Double end	44	35	40	31	39.5	30.5	36	27	40.5	31.5	34.5	25.5	37.5	28.5
40	Head end	39	41	35	37	34.5	36.5	31	33	35.5	37.5	29.5	31.5	32	34.5
	Rod end	48	27 (36)	44	23 (32)	43.5	22.5 (31.5)	40	19 (28)	44.5	23.5 (32.5)	38.5	17.5 (26.5)	41	20.5 (29.5)
	Double end	48	41	44	37	43.5	36.5	40	33	44.5	37.5	38.5	31.5	41	34.5
50	Head end	46	49	42	45	41.5	44.5	38	41	42.5	45.5	36.5	39.5	39.5	42.5
	Rod end	58	32 (44)	54	28 (40)	53.5	27.5 (39.5)	50	24 (36)	54.5	28.5 (40.5)	48.5	22.5 (34.5)	51.5	25.5 (37.5)
	Double end	58	49	54	45	53.5	44.5	50	41	54.5	45.5	48.5	39.5	51.5	42.5
63	Head end	46	49	42	45	41.5	44.5	38	41	42.5	45.5	36.5	39.5	39.5	42.5
	Rod end	58	32 (44)	54	28 (40)	53.5	27.5 (39.5)	50	24 (36)	54.5	28.5 (40.5)	48.5	22.5 (34.5)	51.5	25.5 (37.5)
	Double end	58	49	54	45	53.5	44.5	50	41	54.5	45.5	48.5	39.5	51.5	42.5
80	Head end	—	—	—	—	—	—	48	54	—	—	46.5	52.5	49.5	55.5
	Rod end							64	32 (46)			62.5	30.5 (44.5)	65.5	33.5 (47.5)
	Double end							64	54			62.5	52.5	65.5	55.5
100	Head end	—	—	—	—	—	—	48	54	—	—	46.5	52.5	49.5	55.5
	Rod end							64	32 (46)			62.5	30.5 (44.5)	65.5	33.5 (47.5)
	Double end							64	54			62.5	52.5	65.5	55.5

Note 1) The values in ( ) are for long stroke.
Note 2) Adjust the auto switch after confirming the operating condition in the actual setting.

Minimum Stroke for Auto Switch Mounting

n: Number of auto switches [mm]

Auto switch model	Number of auto switches				
	With 1 pc.	With 2 pcs.		With n pcs.	
		Different surfaces	Same surface	Different surfaces	Same surface
D-M9□	5	15 Note 1)	40 Note 1)	$20 + 35\frac{(n-2)}{2}$ (n = 2, 4, 6···) Note 3)	55 + 35 (n – 2) (n = 2, 3, 4, 5···)
D-M9□W	10	15 Note 1)	40 Note 1)	$20 + 35\frac{(n-2)}{2}$ (n = 2, 4, 6···) Note 3)	55 + 35 (n – 2) (n = 2, 3, 4, 5···)
D-M9□A	10	25	40 Note 1)	$25 + 35\frac{(n-2)}{2}$ (n = 2, 4, 6···) Note 3)	60 + 35 (n – 2) (n = 2, 3, 4, 5···)
D-A9□	5	15	30 Note 1)	$15 + 35\frac{(n-2)}{2}$ (n = 2, 4, 6···) Note 3)	50 + 35 (n – 2) (n = 2, 3, 4, 5···)
D-M9□V	5	20	35	$20 + 35\frac{(n-2)}{2}$ (n = 2, 4, 6···) Note 3)	35 + 35 (n – 2) (n = 2, 3, 4, 5···)
D-A9□V	5	15	25	$15 + 35\frac{(n-2)}{2}$ (n = 2, 4, 6···) Note 3)	25 + 35 (n – 2) (n = 2, 3, 4, 5···)
D-M9□WV **D-M9□AV**	10	20	35	$20 + 35\frac{(n-2)}{2}$ (n = 2, 4, 6···) Note 3)	35 + 35 (n – 2) (n = 2, 3, 4, 5···)
D-C7□ **D-C80**	5	15	50	$15 + 45\frac{(n-2)}{2}$ (n = 2, 4, 6···) Note 3)	50 + 45 (n – 2) (n = 2, 3, 4, 5···)
D-H7□ **D-H7□W** **D-H7BA** **D-H7NF**	10	15	60	$15 + 45\frac{(n-2)}{2}$ (n = 2, 4, 6···) Note 3)	60 + 45 (n – 2) (n = 2, 3, 4, 5···)
D-H7C **D-C73C** **D-C80C**	5	15	65	$15 + 50\frac{(n-2)}{2}$ (n = 2, 4, 6···) Note 3)	65 + 50 (n – 2) (n = 2, 3, 4, 5···)
D-G5□ **D-K59□** **D-B5□** **D-B64**	5	15	75	$15 + 50\frac{(n-2)}{2}$ (n = 2, 4, 6···) Note 3)	75 + 55 (n – 2) (n = 2, 3, 4, 5···)
D-B59W	10	20	75	$20 + 50\frac{(n-2)}{2}$ (n = 2, 4, 6···) Note 3)	75 + 55 (n – 2) (n = 2, 3, 4, 5···)

Note 3) When "n" is an odd number, an even number that is one larger than this odd number is used for the calculation.

Note 1) Auto switch mounting

Auto switch model	With 2 auto switches	
	Different surfaces Note 1)	Same surface Note 1)
	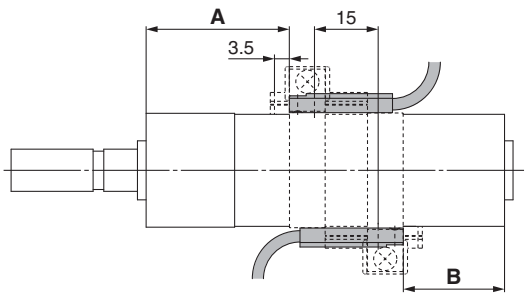 Correct auto switch mounting position is 3.5 mm from the back face of the switch holder.	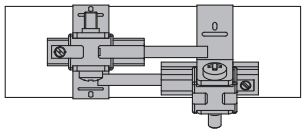 The auto switch is mounted by slightly displacing it in a direction (cylinder tube circumferential exterior) so that the auto switch and lead wire do not interfere with each other.
D-M9□ **D-M9□W**	Less than 20 stroke Note 2)	Less than 55 stroke Note 2)
D-M9□A	Less than 20 stroke Note 2)	Less than 60 stroke Note 2)
D-A9□	—	Less than 50 stroke Note 2)

Note 2) Minimum stroke for auto switch mounting in styles other than those mentioned in Note 1.

Auto Switch Mounting Brackets/Part No.

Auto switch model	Bore size [mm]							
	20	25	32	40	50	63	80	100
D-M9□(V) **D-M9□W(V)** **D-A9□(V)**	BMA3-020 (A set of a, b, c, d)	BMA3-025 (A set of a, b, c, d)	BMA3-032 (A set of a, b, c, d)	BMA3-040 (A set of a, b, c, d)	BMA3-050 (A set of a, b, c, d)	BMA3-063 (A set of a, b, c, d)	—	—
D-M9□A(V) Note 2)	BMA3-020S (A set of b, c, d, e)	BMA3-025S (A set of b, c, d, e)	BMA3-032S (A set of b, c, d, e)	BMA3-040S (A set of b, c, d, e)	BMA3-050S (A set of b, c, d, e)	BMA3-063S (A set of b, c, d, e)	—	—

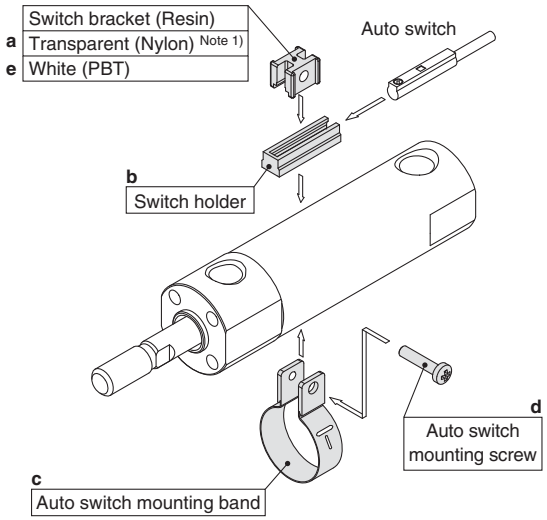

∗ Band (c) is mounted so that the projected part is on the internal side (contact side with the tube).

D-H7□ **D-H7□W** **D-H7NF** **D-C7□/C80** **D-C73C/C80C**	BMA2-020A (A set of band and screw)	BMA2-025A (A set of band and screw)	BMA2-032A (A set of band and screw)	BMA2-040A (A set of band and screw)	BMA2-050A (A set of band and screw)	BMA2-063A (A set of band and screw)	—	—
D-H7BA	BMA2-020AS (A set of band and screw)	BMA2-025AS (A set of band and screw)	BMA2-032AS (A set of band and screw)	BMA2-040AS (A set of band and screw)	BMA2-050AS (A set of band and screw)	BMA2-063AS (A set of band and screw)	—	—
D-G5□/K59 **D-G5□W/K59W** **D-G5BA/G59F** **D-G5NT** **D-B5□/B64** **D-B59W** **D-G5NB**	BA-01 (A set of band and screw)	BA-02 (A set of band and screw)	BA-32 (A set of band and screw)	BA-04 (A set of band and screw)	BA-05 (A set of band and screw)	BA-06 (A set of band and screw)	BA-08 (A set of band and screw)	BA-10 (A set of band and screw)

Note 1) Since the switch bracket (made from nylon) are affected in an environment where alcohol, chloroform, methylamines, hydrochloric acid or sulfuric acid is splashed over, so it cannot be used.
Please contact SMC regarding other chemicals.
Note 2) As the indicator LED is projected from the switch unit, indicator LED may be damaged if the switch bracket is fixed on the indicator LED.

Band Mounting Brackets Set Part No.

Set part no.	Contents
BMA2-□□□A(S) ∗ **S**: Stainless steel screw	· Auto switch mounting band (c) · Auto switch mounting screw (d)
BJ4-1	· Switch bracket (White/PBT) (e) · Switch holder (b)
BJ5-1	· Switch bracket (Transparent/Nylon) (a) · Switch holder (b)

[Stainless Steel Mounting Screw]

The following stainless steel mounting screw kit is available. Use it in accordance with the operating environment.
(Since the auto switch mounting bracket is not included, order it separately.)
BBA3: D-B5/B6/G5/K5 types
Note 3) Refer to the **Auto Switch Guide** for details on the BBA3.
When the D-G5BA type auto switch is shipped independently, the BBA3 is attached.

Operating Range

[mm]

Auto switch model	Bore size							
	20	**25**	**32**	**40**	**50**	**63**	**80**	**100**
D-M9□(V) **D-M9□W(V)** **D-M9□A(V)**	4.5	5.0	4.5	5.5	5.0	5.5	—	—
D-A9□	7	6	8	8	8	9	—	—
D-C7/C80 **D-C73C/C80C**	8	10	9	10	10	11	—	—
D-B5□/B64	8	10	9	10	10	11	11	11
D-B59W	13	13	14	14	14	17	16	18
D-H7□/H7□W **D-H7NF/H7BA**	4	4	4.5	5	6	6.5	—	—
D-H7C	7	8.5	9	10	9.5	10.5	—	—
D-G5□/G5□W/G59F **D-G5BA/K59/K59W**	4	4	4.5	5	6	6.5	6.5	7
D-G5NT	4	4	4.5	5	6	6.5	6.5	7
D-G5NB	35	40	40	45	45	45	45	50

∗ Values which include hysteresis are for guideline purposes only, they are not a guarantee (assuming approximately ±30 % dispersion) and may change substantially depending on the ambient environment.

Cylinder Mounting Bracket, by Stroke/Auto Switch Mounting Surfaces

st: Stroke [mm]

Auto switch model	Basic, Foot, Flange, Clevis			Trunnion		
	With 1 pc. (Rod cover side)	With 2 pcs. (Different surfaces)	With 2 pcs. (Same surface)	With 1 pc. (Rod cover side)	With 2 pcs. (Different surfaces)	With 2 pcs. (Same surface)
Auto switch mounting surface / Auto switch type	Port surface 	Port surface 	Port surface 			
D-M9□(V) **D-M9□W(V)** **D-M9□A(V)** **D-A9□**	10 st or more	15 to 44 st	45 st or more	10 st or more	15 to 44 st	45 st or more
D-C7/C8	10 st or more	15 to 49 st	50 st or more	10 st or more	15 to 49 st	50 st or more
D-H7□/H7□W **D-H7BA/H7NF**	10 st or more	15 to 59 st	60 st or more	10 st or more	15 to 59 st	60 st or more
D-H7C/C73C/C80C	10 st or more	15 to 64 st	65 st or more	10 st or more	15 to 64 st	65 st or more
D-G5/K5/B5/B6 **D-G5□W/K59W/G5BA** **D-G59F/G5NT**	10 st or more	15 to 74 st	75 st or more	10 st or more	15 to 74 st	75 st or more
D-B59W	15 st or more	20 to 74 st	75 st or more	15 st or more	20 to 74 st	75 st or more

∗ Trunnion type is not available for ø 80 and ø 100.
∗ Adjust the auto switch mounting angle according to the customer's application.

Other than the applicable auto switches listed in "How to Order", the following auto switches are mountable.
Refer to the **Auto Switch Guide** for the detailed specifications.

Type	Model	Electrical entry	Features	Applicable bore size
Solid state	D-H7A1, H7A2, H7B	Grommet (In-line)	—	ø 20 to ø 63
	D-H7NW, H7PW, H7BW		Diagnostic indication (2-colour indication)	
	D-H7BA		Water resistant (2-colour indication)	
	D-G5NT		With timer	ø 20 to ø 100
Reed	D-C73, C76		—	ø 20 to ø 63
	D-C80		Without indicator light	
	D-B53		—	ø 20 to ø 100

∗ With pre-wired connector is also available for solid state auto switches. For details, refer to the **Auto Switch Guide**.
∗ Normally closed (NC = b contact) solid state auto switches (D-F9G/F9H) are also available. For details, refer to the **Auto Switch Guide**.
∗ Wide range detection type, solid state auto switch (D-G5NB) is also available. For details, refer to the **Auto Switch Guide**.

Prior to Use
Auto Switch Connection and Example

Sink Input Specifications

3-wire, NPN

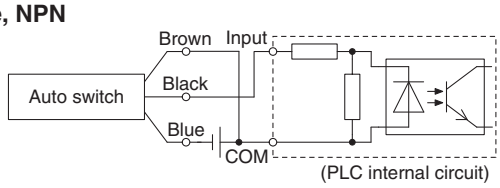

2-wire

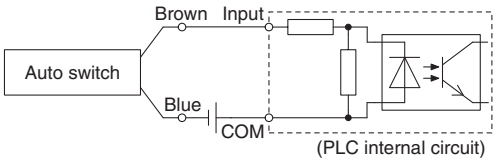

Source Input Specifications

3-wire, PNP

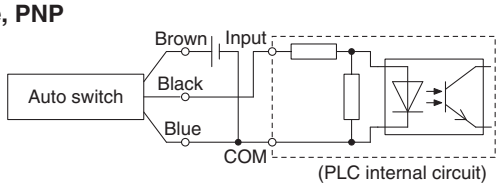

2-wire

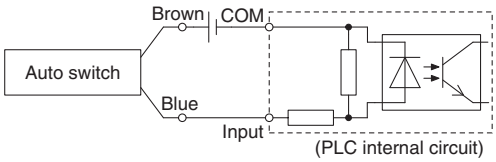

Connect according to the applicable PLC input specifications, as the connection method will vary depending on the PLC input specifications.

Example of AND (Series) and OR (Parallel) Connection

∗ When using solid state auto switches, ensure the application is set up so the signals for the first 50 ms are invalid.

3-wire AND connection for NPN output

(Using relays)

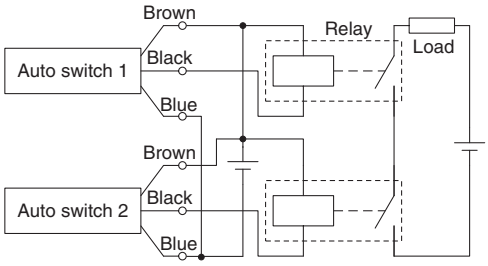

(Performed with auto switches only)

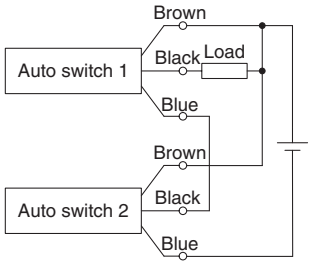

3-wire OR connection for NPN output

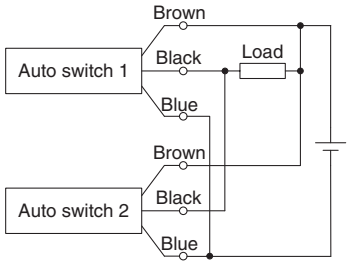

3-wire AND connection for PNP output

(Using relays)

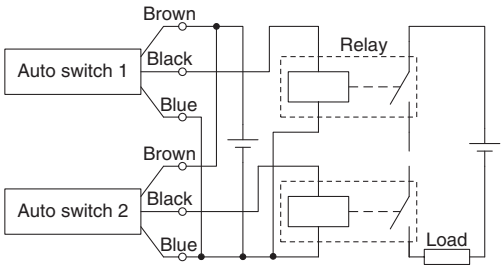

(Performed with auto switches only)

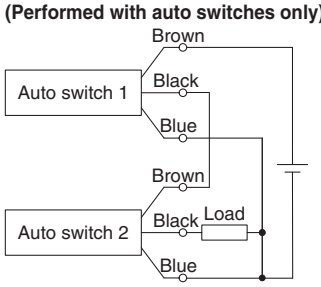

3-wire OR connection for PNP output

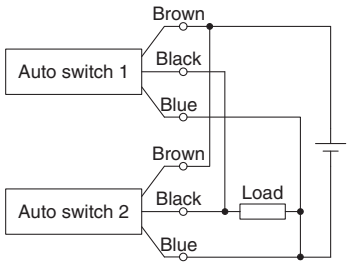

2-wire AND connection

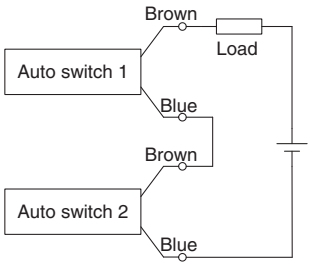

When two auto switches are connected in series, a load may malfunction because the load voltage will decline when in the ON state.
The indicator lights will light up when both of the auto switches are in the ON state.
Auto switches with load voltage less than 20 V cannot be used.

Load voltage at ON = Power supply voltage – Residual voltage x 2 pcs.
= 24 V – 4 V x 2 pcs.
= 16 V

Example: Power supply is 24 VDC
Internal voltage drop in auto switch is 4 V.

2-wire OR connection

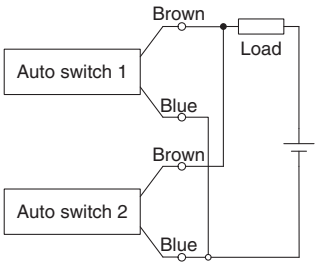

(Solid state)
When two auto switches are connected in parallel, malfunction may occur because the load voltage will increase when in the OFF state.

(Reed)
Because there is no current leakage, the load voltage will not increase when turned OFF. However, depending on the number of auto switches in the ON state, the indicator lights may sometimes grow dim or not light up, due to the dispersion and reduction of the current flowing to the auto switches.

Load voltage at OFF = Leakage current x 2 pcs. x Load impedance
= 1 mA x 2 pcs. x 3 kΩ
= 6 V

Example: Load impedance is 3 kΩ.
Leakage current from auto switch is 1 mA.

		With End Lock	Direct Mount, Non-rotating Rod	Direct Mount	Non-rotating Rod		Standard		
Made to Order	Auto Switch	CBG1	CG1KR	Double Acting, Single Rod CG1R	Double Acting, Double Rod CG1KW	Double Acting, Single Rod CG1K	Single Acting, Spring Return/Extend CG1	Double Acting, Double Rod CG1W	Double Acting, Single Rod CG1

Simple Specials/Made to Order

Please contact SMC for detailed specifications, delivery and prices.

■Simple Specials

The following special specifications can be ordered as a simplified Made-to-Order.
There is a specification sheet available on paper and CD-ROM. Please contact your SMC sales representatives if necessary.

Symbol	Specifications	CG1 (Standard type)				
		Double acting				Single acting
		Single rod		Double rod		Single rod
		Rubber	Air	Rubber	Air	Rubber
-XA0 to 30	Change of rod end shape	●	●	●	●	

■Made to Order

Symbol	Specifications	CG1 (Standard type)				
		Double acting				Single acting
		Single rod		Double rod		Single rod
		Rubber	Air	Rubber	Air	Rubber
-XB6	Heat resistant cylinder (–10 to 150 °C)	●	●	●	●	
-XB7	Cold resistant cylinder (–40 to 70 °C)	●		●		
-XB9	Low speed cylinder (10 to 50 mm/s)	●				
-XB13	Low speed cylinder (5 to 50 mm/s)	●				
-XC4	With heavy duty scraper	●	●			
-XC6	Made of stainless steel	●	●	●	●	● Note 2)
-XC8	Adjustable stroke cylinder/Adjustable extension type	●	●			
-XC9	Adjustable stroke cylinder/Adjustable retraction type	●	●			
-XC10	Dual stroke cylinder/Double rod type	●	●			
-XC11	Dual stroke cylinder/Single rod type	●	●			
-XC12	Tandem cylinder	●				
-XC13	Auto switch rail mounting	●	●	●	●	
-XC20	Head cover axial port	●				●
-XC22	Fluororubber seal	●	●	●	●	
-XC27	Double clevis and double knuckle joint pins made of stainless steel	●	●			●
-XC29	Double knuckle joint with spring pin	●	●			● Note 2)
-XC35	With coil scraper	●	●			
-XC37	Larger throttle diameter of connection port	●	●	●	●	
-XC42	Built-in shock absorber in head cover side	●	●			
-XC85	Grease for food processing equipment	●	●	●	●	●
-X446	PTFE grease	●				

Note 1) The shape is the same as the existing product. Use the existing seal kit.
Note 2) Single acting/spring return type (S) only

CG1K (Non-rotating rod type)			CG1R (Direct mount type)		CG1KR (Direct mount, Non-rotating rod type)	CBG1 (With end lock) Note 1)		Symbol	Page
Double acting			Double acting		Double acting	Double acting			
Single rod		Double rod	Single rod		Single rod	Single rod			
Rubber	Air	Rubber	Rubber	Air	Rubber	Rubber	Air		
●	●		●	●		●	●	-XA1 to 30	Page 79

CG1K (Non-rotating rod type)			CG1R (Direct mount type)		CG1KR (Direct mount, Non-rotating rod type)	CBG1 (With end lock) Note 1)		Symbol	Page
Double acting			Double acting		Double acting	Double acting			
Single rod		Double rod	Single rod		Single rod	Single rod			
Rubber	Air	Rubber	Rubber	Air	Rubber	Rubber	Air		
			●	●				-XB6	Page 81
			● Note 1)					-XB7	Page 81
			● Note 1)					-XB9	Page 81
			● Note 1)					-XB13	Page 82
								-XC4	Page 82
			●	●				-XC6	Page 82
●			●		● Note 1)			-XC8	Page 83
●			●		● Note 1)			-XC9	Page 84
●	●							-XC10	Page 85
●								-XC11	Page 85, 86
● Note 1)								-XC12	Page 87
●			●			●	●	-XC13	Page 87 to 89
●			●		●			-XC20	Page 90
				●				-XC22	Page 90
●	●							-XC27	Page 90
								-XC29	Page 91
								-XC35	Page 91
								-XC37	Page 91
								-XC42	Page 92
			●	●				-XC85	Page 93
								-X446	Page 93

Simple Specials

These changes are dealt with Simple Specials System.

1 Change of Rod End Shape

Applicable Series

Series		Action	Symbol for change of rod end shape	Note
Standard type	**CG1**	Double acting, Single rod	XA0 to 30	∗1
	CG1W	Double acting, Double rod	XA0 to 30	
Non-rotating rod type	**CG1K**	Double acting, Single rod	XA0 to 30	∗1
Direct mount type	**CG1R**	Double acting, Single rod	XA0 to 30	∗2
With end lock	**CBG1**	Double acting, Single rod	XA0 to 30	

∗1: Except rod end bracket, pivot bracket ∗2: Except pivot bracket

⚠ Precautions

1. SMC will make appropriate arrangements if no dimension, tolerance, or finish instructions are given in the diagram.
2. Standard dimensions marked with "∗" will be as follows to the rod diameter (D). Enter any special dimension you desire.
   $D \leq 6 \rightarrow D - 1$ mm $6 < D \leq 25 \rightarrow D - 2$ mm $D > 25 \rightarrow D - 4$ mm
3. In the case of double rod type and single acting retraction type, enter the dimensions when the rod is retracted.

Symbol: A0

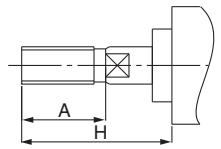

Symbol: A1

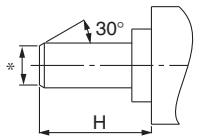

Symbol: A2

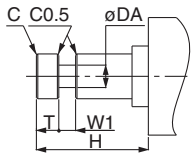

Symbol: A3

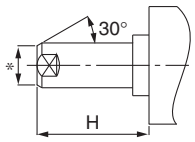

Symbol: A4

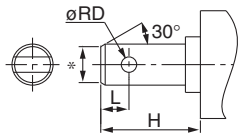

Symbol: A5

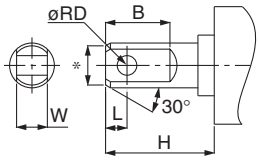

Symbol: A6

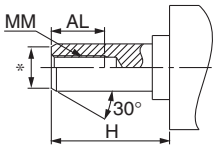

Symbol: A7

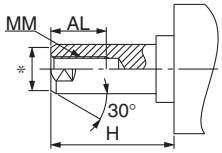

Symbol: A8

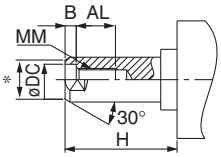

Symbol: A9

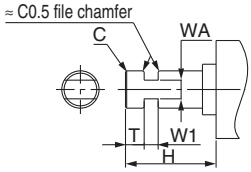

Symbol: A10

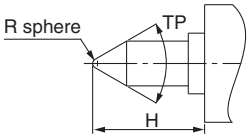

Symbol: A11

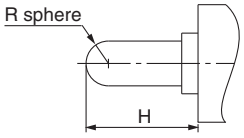

Symbol: A12

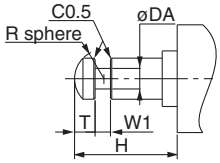

Symbol: A13

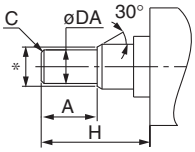

Symbol: A14

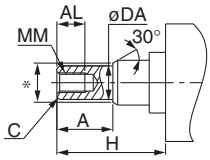

Symbol: A15

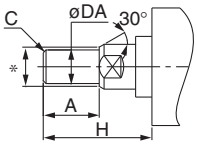

Symbol: A16

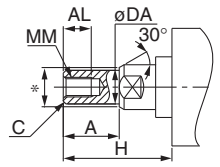

Symbol: A17

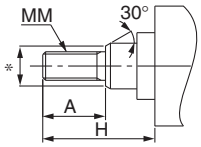

Symbol: A18

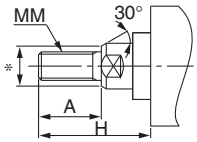

Symbol: A19

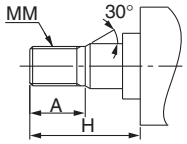

Symbol: A20

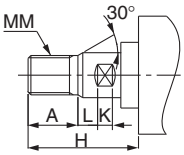

Symbol: A21

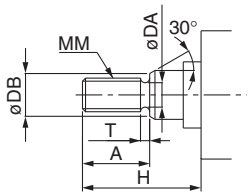

Symbol: A22

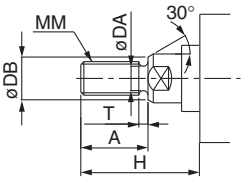

Symbol: A23

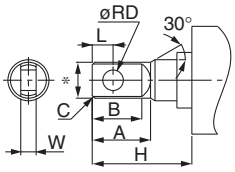

Symbol: A24

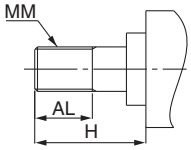

Symbol: A25

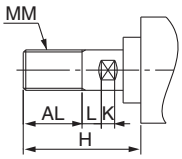

Symbol: A26

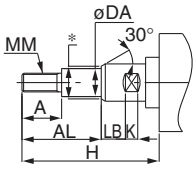

Symbol: A27

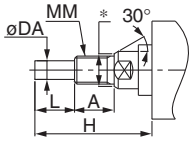

Symbol: A28

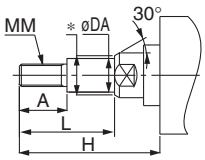

Symbol: A29

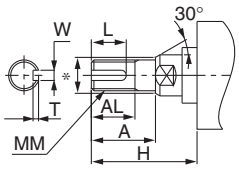

Symbol: A30

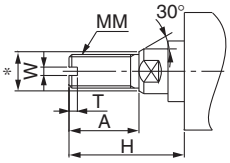

Made to Order

Please contact SMC for detailed dimensions, specifications and lead times.

Made to Order

1 Heat Resistant Cylinder (–10 to 150 °C)

Symbol **-XB6**

Air cylinder which changed the seal material and grease, so that it could be used even at higher temperature up to 150 from –10 °C.

Applicable Series

Description	Model	Action	Note
Standard type	CG1	Double acting, Single rod	Except with auto switch. Cylinders with rubber bumper have no bumper.
	CG1W	Double acting, Double rod	
Direct mount type	CG1R	Double acting, Single rod	

Note 1) Operate without lubrication from a pneumatic system lubricator.
Note 2) Please contact SMC for details on the maintenance intervals for this cylinder, which differ from those of the standard cylinder.
Note 3) In principle, it is impossible to make built-in magnet type and the one with auto switch. But, as for the one with auto switch, and the heat resistant cylinder with heat resistant auto switch, please contact SMC.
Note 4) Piston speed is ranged from 50 to 500 mm/s.

How to Order

Standard model no. – XB6

Heat resistant cylinder

Specifications

Ambient temperature range	–10 °C to 150 °C
Seal material	Fluororubber
Grease	Heat resistant grease
Specifications other than above and external dimensions	Same as standard type

⚠Warning

Precautions

Be aware that smoking cigarettes etc. after your hands have come into contact with the grease used in this cylinder can create a gas that is hazardous to humans.

2 Cold Resistant Cylinder (–40 to 70 °C)

Symbol **-XB7**

Air cylinder which changed the seal material and grease, so that it could be used even at lower temperature down to –40 °C.

Applicable Series

Description	Model	Action	Note
Standard type	CG1	Double acting, Single rod	Except with air cushion and auto switch, rod end bracket, pivot bracket. Cylinders with rubber bumper have no bumper. Except with rod boot and with air cushion.
	CG1W	Double acting, Double rod	
Direct mount type	CG1R	Double acting, Single rod	Except with air cushion and with auto switch. Cylinders with rubber bumper have no bumper.

Note 1) Operate without lubrication from a pneumatic system lubricator.
Note 2) Use dry air which is suitable for heatless air dryer etc. not to cause the moisture to be frozen.
Note 3) Please contact SMC for details on the maintenance intervals for this cylinder, which differ from those of the standard cylinder.
Note 4) Mounting auto switch is impossible.
Note 5) Without a bumper.
Piston speed is ranged from 50 to 500 mm/s.

How to Order

Standard model no. – XB7

Cold resistant cylinder

Specifications

Ambient temperature range	–40 °C to 70 °C
Seal material	Low nitrile rubber
Grease	Cold resistant grease
Auto switch	Not mountable
Dimensions	Same as standard type
Additional specifications	Same as standard type

⚠Warning

Precautions

Be aware that smoking cigarettes etc. after your hands have come into contact with the grease used in this cylinder can create a gas that is hazardous to humans.

3 Low Speed Cylinder (10 to 50 mm/s)

Symbol **-XB9**

Even if driving at lower speeds 10 to 50 mm/s, there would be no stick-slip phenomenon and it can run smoothly.

Applicable Series

Description	Model	Action	Note
Standard type	CG1	Double acting, Single rod	Except with rod boot and with air cushion
Direct mount type	CG1R	Double acting, Single rod	Except with air cushion

Note) Operate without lubrication from a pneumatic system lubricator.

How to Order

Standard model no. – XB9

Low speed cylinder

Specifications

Piston speed	10 to 50 mm/s
Dimensions	Same as standard type
Additional specifications	Same as standard type

⚠Warning

Precautions

Be aware that smoking cigarettes etc. after your hands have come into contact with the grease used in this cylinder can create a gas that is hazardous to humans.

4 Low Speed Cylinder (5 to 50 mm/s)

Symbol **-XB13**

Even if driving at lower speeds 5 to 50 mm/s, there would be no stick-slip phenomenon and it can run smoothly.

Applicable Series

Description	Model	Action	Note
Standard type	CG1	Double acting, Single rod	Except with rod boot and with air cushion
Direct mount type	CG1R	Double acting, Single rod	Except with air cushion

Note 1) Operate without lubrication from a pneumatic system lubricator.
Note 2) For speed adjustment, use speed controllers for controlling at lower speeds. (Series AS-FM/AS-M)

How to Order

Standard model no. – **XB13**

Low speed cylinder

Specifications

Piston speed	5 to 50 mm/s
Dimensions	Same as standard type
Additional specifications	Same as standard type

⚠Warning

Precautions

Be aware that smoking cigarettes etc. after your hands have come into contact with the grease used in this cylinder can create a gas that is hazardous to humans.

5 With Heavy Duty Scraper

Symbol **-XC4**

It is suitable for using cylinders under the environment, where there are much dusts in a surrounding area by using a heavy duty scraper on the wiper ring, or using cylinders under earth and sand exposed to the die-casted equipment, construction machinery, or industrial vehicles.

Applicable Series

Description	Model	Action	Note
Standard type	CG1	Double acting, Single rod	ø 32 to ø 63 only

How to Order

Standard model no. – **XC4**

With heavy duty scraper

Specifications: Same as standard type

⚠Caution

Do not replace heavy duty scrapers.

- Since heavy duty scrapers are press-fit, they must be replaced together with the scraper bracket.

Dimensions

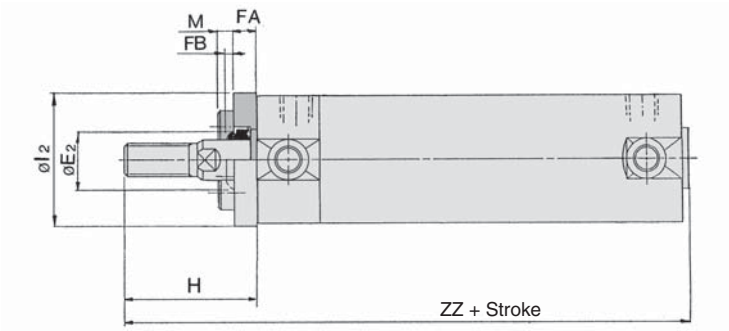

[mm]

Bore size	E_2	FA	FB	M	I_2	H		ZZ	
						Male thread	Female thread	Male thread	Female thread
32	17	8	3	5	38	48	28	121	101
40	21	8	3	3.5	47	58	29	138	109
50	26	9	3	4.5	58	66	30	158	122
63	26	9	3	5.5	72	66	30	158	122

∗ Other dimensions are the same as double acting, single rod, standard type.
∗ On the axial foot and the rod flange types, the mounting bracket is wedged and bolted between the cylinder and the scraper at the time of shipment. On other types, it is placed in the same package, (but not assembled).

Long Stroke

ZZ	
Male thread	Female thread
129	109
147	118
170	134
170	134

6 Made of Stainless Steel

Symbol **-XC6**

Suitable for the cases it is likely to generate rust by being immersed in the water and corrosion.

Applicable Series

Description	Model	Action	Note
Standard type	CG1	Double acting, Single rod	
		Single acting (Spring return)	
	CG1W	Double acting, Double rod	
Direct mount type	CG1R	Double acting, Single rod	
Smooth Cylinder	CG1Y	Double acting, Single rod	

How to Order

Standard model no. – **XC6**

Made of stainless steel

Specifications

Parts changed to stainless steel	Piston rod, Rod end nut
Specifications other than above and external dimensions	Same as standard type

7 Adjustable Stroke Cylinder/Adjustable Extension Type

Symbol **-XC8**

It adjusts the extending stroke by the stroke adjustable mechanism equipped in the head side.

Applicable Series

Description	Model	Action	Note
Standard type	CG1	Double acting	
Non-rotating rod type	CG1K	Double acting	Except with air cushion
Direct mount type	CG1R	Double acting	Except with air cushion
Direct mount, Non-rotating rod type	CG1KR	Double acting	Except with air cushion*1

*1 The shape is the same as the existing product. Use the existing seal kit.

Specifications

Stroke adjustment symbol	A	B
Stroke adjustment range [mm]	0 to 25	0 to 50
Additional specifications	Same as standard type	

How to Order

CG1 [Mounting style] [Type] [Bore size] – [Stroke] [Stroke adjustment symbol] Z – [Pivot bracket] [Rod end bracket] – **XC8**

* Except head flange and clevis types

CG1KR [Mounting style] [Type] [Bore size] – [Stroke] [Stroke adjustment symbol] – **XC8**

● Adjustable stroke cylinder/Adjustable extension type

⚠ Warning

Precautions

1. When the cylinder is operating, if something gets caught between the stopper bracket for adjusting the stroke and the cylinder body, it could cause bodily injury or damage the peripheral equipment. Therefore, take preventive measures as necessary, such as installing a protective cover.
2. To adjust the stroke, make sure to secure the wrench flats of the stopper bracket by a wrench etc. before loosening the lock nut. If the lock nut is loosened without securing the stopper bracket, be aware that the area that joins the load to the piston rod or the area in which the piston rod is joined with the load side and the stopper bracket side could loosen first. It may cause an accident or malfunction.

Dimensions (Dimensions other than below are the same as standard type.)

Series CG1

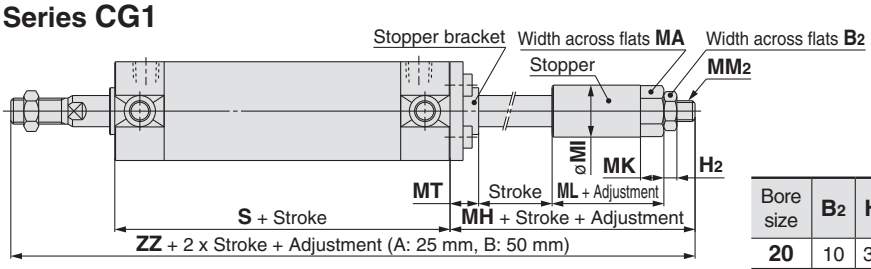

[mm]

Bore size	B2	H2	MA	MH	MI	MK	ML	MM2	MT	S	ZZ
20	10	3.6	12	38	14	7	18	M6 x 1	9	77	150
25	13	5	17	41	20	9	18	M8 x 1.25	11	77	158
32	13	5	17	41	20	9	18	M8 x 1.25	11	79	160
40	17	6	19	47	25	10	24	M10 x 1.25	11	87	184
50	19	8	24	60	32	13	32	M14 x 1.5	11	102	220
63	19	8	24	60	32	13	32	M14 x 1.5	13	102	220

* On the axial foot type, the foot is wedged and bolted between the cylinder and the stopper bracket at the time of shipment. On other types, it is placed in the same package, (but not assembled).

Series CG1K/CG1R/CG1KR

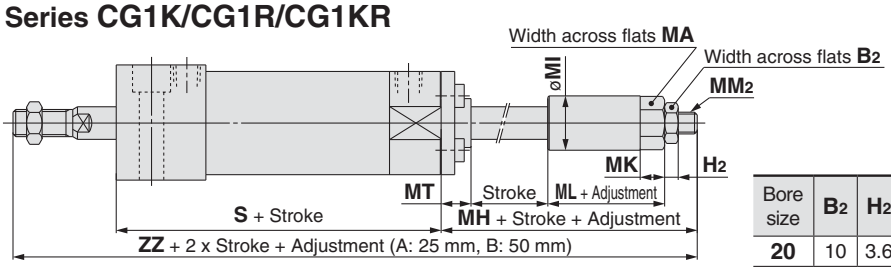

[mm]

Bore size	B2	H2	MA	MH	MI	MK	ML	MM2	MT	S	ZZ
20	10	3.6	12	38	14	7	18	M6 x 1	9	83	148
25	13	5	17	41	20	9	18	M8 x 1.25	11	85	158
32	13	5	17	41	20	9	18	M8 x 1.25	11	91	164
40	17	6	19	47	25	10	24	M10 x 1.25	11	103	189
50	19	8	24	60	32	13	32	M14 x 1.5	11	120	225
63	19	8	24	60	32	13	32	M14 x 1.5	13	126	231

8 Adjustable Stroke Cylinder/Adjustable Retraction Type

Symbol **-XC9**

The retracting stroke of the cylinder can be adjusted by the adjustment bolt.

Applicable Series

Description	Model	Action	Note
Standard type	CG1	Double acting, Single rod	Except head flange and clevis types
Non-rotating rod type	CG1K	Double acting, Single rod	Except head flange and clevis types and with air cushion
Direct mount type	CG1R	Double acting, Single rod	Except with air cushion
Direct mount, Non-rotating rod type	CG1KR	Double acting	Except with air cushion*1

*1 The shape is the same as the existing product. Use the existing seal kit.

Specifications

Stroke adjustment symbol	A	B
Stroke adjustment range [mm]	0 to 25	0 to 50
Additional specifications	Same as standard type	

How to Order

CG1 [Mounting style] [Type] [Bore size] – [Stroke] [Stroke adjustment symbol] Z – [Rod end bracket] – **XC9**

* Except head flange and clevis types

CG1KR [Mounting style] [Type] [Bore size] – [Stroke] [Stroke adjustment symbol] – **XC9**

Adjustable stroke cylinder/Adjustable retraction type

⚠ Warning

Precautions

1. When air is supplied to the cylinder, if the stroke adjustment bolt is loosened in excess of the allowable stroke adjustment amount, be aware that the stroke adjustment bolt could fly out or air could be discharged, which could injure personnel or damage the peripheral equipment.
2. Adjust the stroke when the cylinder is not pressurised. If it is adjusted in the pressurised state, the seal of the adjustment section could become deformed, leading to air leakage.

Dimensions (Dimensions other than below are the same as standard type.)

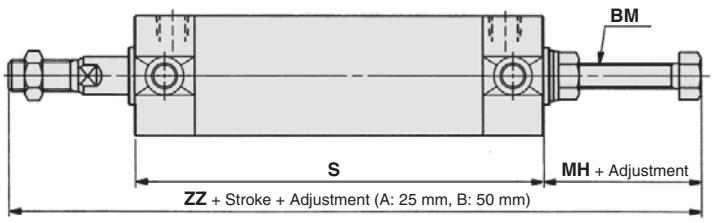

[mm]

Bore size	BM	S	Rubber bumper		Air cushion	
			MH	ZZ	MH	ZZ
20	M6 x 1	77	23	135	21	133
25	M6 x 1	77	23	140	21	138
32	M8 x 1.25	79	25	144	25	144
40	M12 x 1.75	87	40	177	39	176
50	M12 x 1.75	102	33	193	37	197
63	M16 x 2	102	40	200	44	204

* In the case of axial foot type, it is assembled at the time of shipment. On other types, it is placed in the same package, (but not assembled).
* Dimensions other than above are the same as those for the CG1 series, long stroke type.

9 Dual Stroke Cylinder/Double Rod Type

Symbol **-XC10**

Two cylinders are constructed as one cylinder in a back-to-back configuration allowing the cylinder stroke to be controlled in three steps.

Applicable Series

Description	Model	Action	Note
Standard type	CG1	Double acting, Single rod	Except rod end bracket, pivot bracket
Non-rotating rod type	CG1K	Double acting, Single rod	Except rod end bracket, pivot bracket

How to Order

CG1 [Mounting style] [Type] [Bore size] – [Stroke A] + [Stroke B] [Suffix] Z – **XC10**

Dual stroke cylinder/Double rod type

Function

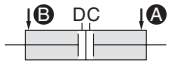

When air pressure is supplied to ports A and B, both strokes A and B retract.

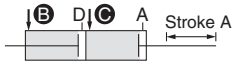

When air pressure is supplied to ports B and C, A out strokes.

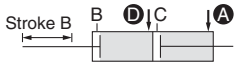

When air pressure is supplied to ports A and D, B out strokes.

When air pressure is supplied to ports C and D, both strokes A and B out strokes.

Dimensions (Dimensions other than below are the same as standard type.)

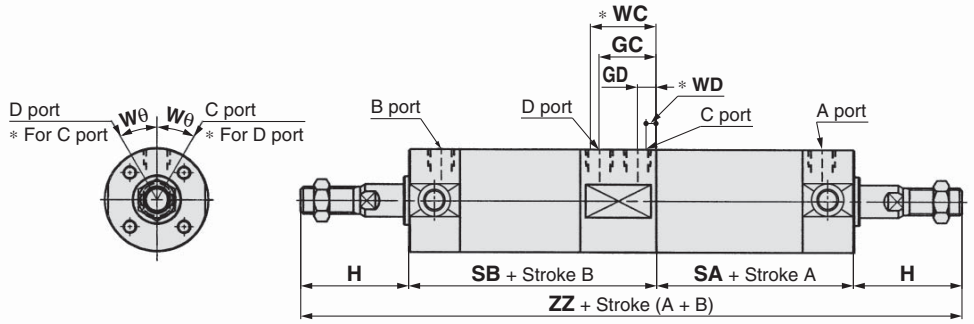

[mm]

Bore size	GC	GD	H	SA	SB	Wθ	Air cushion WC	Air cushion WD	ZZ
20	20.5 (21)	8.5 (9)	35	56.5 (56)	85.5 (86)	30°	(25)	(5)	212
25	21 (21.5)	9 (8.5)	40	56	86	30°	(25)	(5)	222
32	23	9	40	58	90	30°	(27)	(5)	228
40	23.5 (25)	7.5 (9)	50	66.5 (65)	97.5 (99)	20°	(29)	(5)	264
50	29	13	58	75	117	20°	(33)	(9)	308
63	28	12	58	76	116 (116)	20°	(32)	(8)	308

∗ ( ): With air cushion

10 Dual Stroke Cylinder/Single Rod Type

Symbol **-XC11**

Two cylinders can be integrated by connecting them in line, and the cylinder stroke can be controlled in two stages in both directions.

Applicable Series

Description	Model	Action	Note
Standard type	CG1	Double acting, Single rod	
Non-rotating rod type	CG1K	Double acting, Single rod	Except with air cushion

Specifications: Same as standard type

∗ Please contact SMC for each manufacturable stroke length.

How to Order

CG1 [Mounting style] [Type] [Bore size] – [Stroke A] + [Stroke B-A] [Suffix] Z – [Pivot bracket] [Rod end bracket] – **XC11**

CG1K [Mounting style] [Type] [Bore size] – [Stroke A] + [Stroke B-A] [Suffix] – **XC11**

Dual stroke cylinder/Single rod type

10 Dual Stroke Cylinder/Single Rod Type

Symbol
-XC11

Dimensions (Dimensions other than below are the same as standard type.)

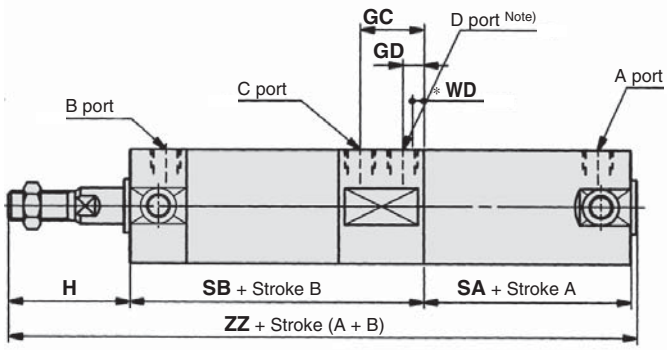

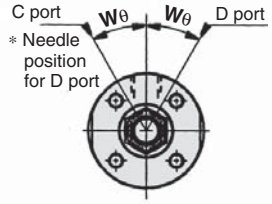

Note) D port style Type N: Rubber bumper, Plug with fixed orifice;
Type A: Air cushion, element non-installation (Release to atmospheric pressure)

CG1, CG1K

[mm]

Bore size	GC	GD	H	SA	SB	Wθ	ZZ	Air cushion	Long stroke Note)	
								WD	SA	ZZ
20	21	9	35	48	87	30°	172	5	56	180
25	21 (21.5)	9 (8.5)	40	48	87	30°	177	6.5	56	185
32	23	9	40	50	91	30°	183	5	58	191
40	25	9	50	56	100	20°	208	5	65	217
50	29	13	58	63	118	20°	241	9	75	253
63	28	12	58	64	117	20°	241	8	76	253

* ( ): With air cushion
Note) When the stroke A is a long stroke (ø 20: 201 mm or more, ø 25 to ø 63: 301 mm or more)

Functional description of dual stroke cylinder

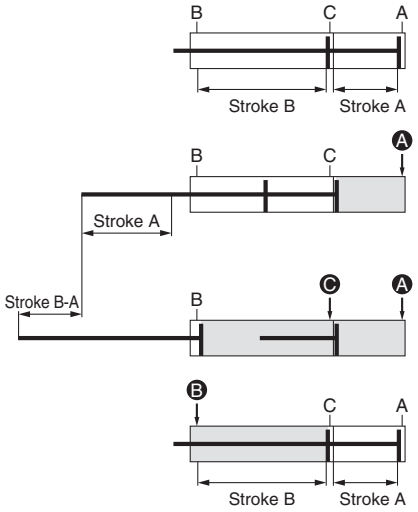

1) Initial state
(0 stroke position)

2) 1st stage
(Stroke A operation)
When the air pressure is supplied from the Ⓐ port, the rod operates the stroke A.

3) 2nd stage
(Stroke B-A operation)
Following the 1st stage, when the air pressure is supplied from the Ⓒ port, the rod operates the stroke B-A.

4) Cylinder retraction
When the air pressure is supplied from the Ⓑ port, the rod retracts completely.

Stroke A or stroke B operation can be made individually.

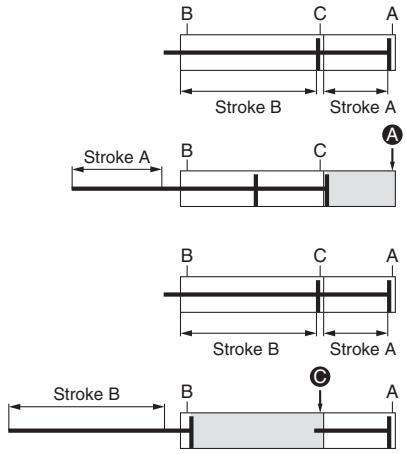

Stroke A operation

1) Initial state
(0 stroke position)

2) Operation
When the air pressure is supplied from the Ⓐ port, the rod operates the stroke A.

Stroke B operation

1) Initial state
(0 stroke position)

2) Operation
When the air pressure is supplied from the Ⓒ port, the rod operates the stroke B.

Double output is possible.

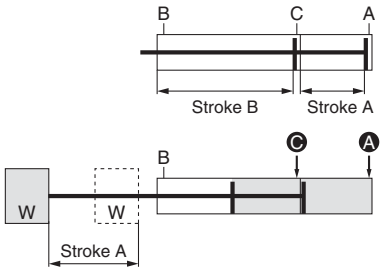

1) Initial state
(0 stroke position)

2) Double output
When the air pressure is supplied to the Ⓐ and Ⓒ ports at the same time, the double output can be obtained in the stroke A range.

⚠ Caution

Precautions

1. Do not supply air until the cylinder is fixed with the attached bolt.
2. If air is supplied without securing the cylinder, the cylinder could lurch, posing the risk of bodily injury or damage to the peripheral equipment.

11 Tandem Cylinder

Symbol **-XC12**

This is a cylinder produced with two air cylinders in line allowing double the output force.

Applicable Series

Description	Model	Action	Note
Standard type	CG1	Double acting, Single rod	Except with air cushion
Non-rotating rod type	CG1K	Double acting, Single rod	Except with air cushion

How to Order

Standard model no. – **XC12**

Tandem cylinder

Specifications: Same as standard type

Function

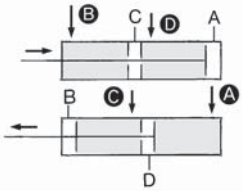

When air pressure is supplied to ports B and D, the output force is doubled in the retract stroke.

When air pressure is supplied to ports A and C, the output force is doubled in the out stroke.

Dimensions (Dimensions other than below are the same as standard type.)

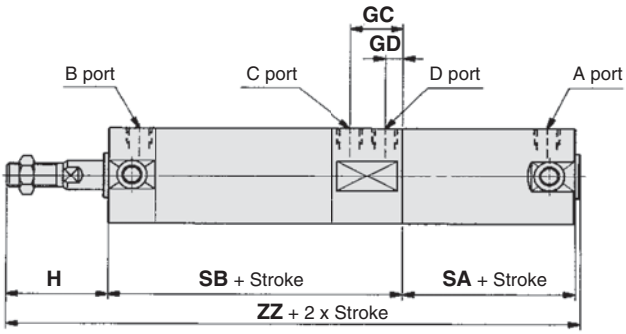

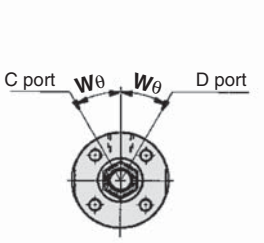

CG1 [mm]

Bore size	GC	GD	H	SA	SB	Wθ	ZZ	Long stroke Note) SA	Long stroke Note) ZZ
20	21	9	35	48	87	30°	172	56	180
25	21	9	40	48	87	30°	177	56	185
32	23	9	40	50	91	30°	183	58	191
40	25	9	50	56	100	20°	208	65	217
50	29	13	58	63	118	20°	241	75	253
63	28	12	58	64	117	20°	241	76	253

Note) In the case of long strokes (ø 20: 201 mm or more, ø 25 to ø 63: 301 mm or more)

CG1K [mm]

Bore size	GC	GD	H	SA	SB	Wθ	ZZ
20	21	9	35	48	87	30°	172
25	21	9	40	48	87	30°	177
32	23	9	40	50	91	30°	183
40	24	8	50	57	99	20°	208
50	28	12	58	64	117	20°	241
63	28	12	58	64	117	20°	241

∗ Please contact SMC for long stroke (301 mm or more) since SA-dimensions and ZZ-dimensions are different from those in the above table.

12 Auto Switch Rail Mounting

Symbol **-XC13**

A cylinder on which a rail is mounted to enable auto switches, in addition to the standard method for mounting auto switches (Band mounting).

Applicable Series

Description	Model	Action	Note
Standard type	CG1	Double acting, Single rod	Except trunnion and basic (without trunnion mounting female thread) types
	CG1W	Double acting, Double rod	Except trunnion and basic (without trunnion mounting female thread) types
Non-rotating rod type	CG1K	Double acting, Single rod	Except trunnion and basic (without trunnion mounting female thread) types, Except with air cushion
Direct mount type	CG1R	Double acting, Single rod	Except with air cushion
With end lock	CBG1	Double acting, Single rod	For XC13A only

Applicable Auto Switches

Rail mounting	**Solid state**	D-M9□/M9□V, D-M9□W/M9□WV, D-M9□A/M9□AV, D-F7□, D-F7□V, D-F7BA, D-F79F, D-F79W, D-F7□WV, D-J79, D-J79C, D-J79W
	Reed	D-A7/A8, D-A7□H/A80H, D-A73C/A80C, D-A79W
Auto switch specifications		Refer to the **Auto Switch Guide** for additional information on auto switches.

How to Order

CDG1 **Standard model no.** – **XC13A**

Rail mounting direction

	XC13A	Mounted on the right side when viewed from the rod with the ports facing upward.
∗	**XC13B**	Mounted on the left side when viewed from the rod.

∗ Not available for CBG1.

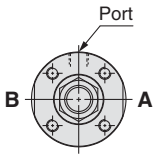

12 Auto Switch Rail Mounting

Symbol
-XC13

Auto Switch Proper Mounting Position (Detection at Stroke End) and Its Mounting Height

Series CDG1

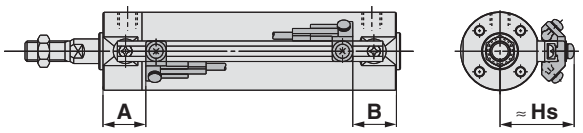

Series CDG1R
(ø 20 to ø 63)

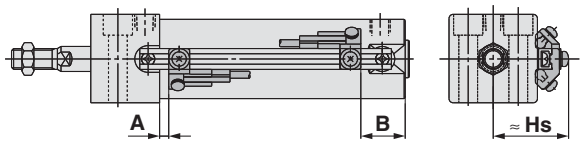

Auto Switch Proper Mounting Position (Detection at stroke end) Applicable Cylinder Series: CDG1-XC13

[mm]

Auto switch model / Bore size	D-M9□/D-M9□V D-M9□W/D-M9□WV D-M9□A/D-M9□AV		D-F7□/F79F/F7□V D-J79/J79C D-F7□W/J79W/F7□WV	D-F7BA/F7ABV D-A72/A7□H/A80H D-A73C/A80C	D-F7NT		D-A7□ D-A80		D-A79W	
	A	B	A	B	A	B	A	B	A	B
20	31.5	22.5 (30.5)	30.5	21.5 (29.5)	35.5	26.5 (34.5)	30	21 (29)	27.5	18.5 (26.5)
25	31	23 (31)	30	22 (30)	35	27 (35)	29.5	21.5 (29.5)	27	19 (27)
32	32.5	23.5 (31.5)	31.5	22.5 (30.5)	36.5	27.5 (35.5)	31	22 (30)	28.5	19.5 (27.5)
40	37.5	25.5 (34.5)	36.5	24.5 (33.5)	41.5	29.5 (38.5)	36	24 (33)	33.5	21.5 (30.5)
50	44.5	30.5 (42.5)	43.5	29.5 (41.5)	49	34.5 (46.5)	43	29 (41)	40.5	26.5 (38.5)
63	43	32 (44)	42	31 (43)	47	36 (48)	41.5	30.5 (42.5)	39	28 (40)
80	56	37 (51)	55	36 (50)	60	41 (55)	54.5	35.5 (49.5)	52	33 (47)
100	55	38 (52)	54	37 (51)	59	42 (56)	53.5	36.5 (50.5)	51	34 (48)

Note 1) ( ): For long stroke
Note 2) Adjust the auto switch after confirming the operating condition in the actual setting.

Auto Switch Proper Mounting Position (Detection at stroke end) Applicable Cylinder Series: CDG1R-XC13

[mm]

Auto switch model / Bore size	D-M9□/D-M9□V D-M9□W/D-M9□WV D-M9□A/D-M9□AV		D-F7□/F79F/F7□V D-J79/J79C D-F7□W/J79W/F7□WV	D-F7BA/F7ABV D-A72/A7□H/A80H D-A73C/A80C	D-F7NT		D-A7□ D-A80		D-A79W	
	A	B	A	B	A	B	A	B	A	B
20	10.5	22.5	9.5	21.5	14.5	26.5	9	21	6.5	18.5
25	10	23	9	22	14	27	8.5	21.5	6	19
32	11.5	23.5	10.5	22.5	15.5	27.5	10	22	7.5	19.5
40	16.5	25.5	15.5	24.5	20.5	29.5	15	24	12.5	21.5
50	18.5	30.5	17.5	29.5	22.5	34.5	17	29	14.5	26.5
63	17	32	16	31	21	36	15.5	30.5	13	28

Note) Adjust the auto switch after confirming the operating condition in the actual setting.

Auto Switch Proper Mounting Position/Applicable Cylinder Series: CDBG1-XC13

[mm]

Lock position / Bore size	H (Head end)		R (Rod end)		W (Double end)	
	A	B Note 2)	A	B	A	B Note 2)
20	+0	+12	+11	+0	+11	+12
25	+0.5	+11.5	+11.5	−0.5	+11.5	+11.5
32	+0	+10	+10	+0	+10	+10
40	+0	+14	+9	+0	+9	+14
50	+0	+17	+12	+0	+12	+17
63	+1.5	+15.5	+13.5	−1.5	+13.5	+15.5
80	−1.5	+23.5	+14.5	+1.5	+14.5	+23.5
100	−0.5	+23.5	+15.5	+0.5	+15.5	+22.5

Note 1) For cylinders with end lock, add the above values to those listed in the table for CG1-XC13.
Note 2) For the head and double end lock, add the above values to CG1-XC13 (long stroke) to find B.
Note 3) Adjust the auto switch after confirming the operating condition in the actual setting.
Note 4) For the dimensions other than the auto switch proper mounting position and its mounting height, refer to the standard type of the CBG1 series.

Auto Switch Mounting Height

[mm]

Auto switch model / Bore size	D-M9□/M9□V D-M9□W/M9□WV D-M9□A/M9□AV D-F7□/F79F D-J79/F7NT D-F7□W/J79W/F7BA	D-F7□V D-F7□WV D-F7BAV	D-J79C	D-A7□ D-A80	D-A73C D-A80C	D-A79W
	Hs	Hs	Hs	Hs	Hs	Hs
20	26.5	29	32	25.5	32.5	28
25	29	31.5	34.5	28	35	30.5
32	32.5	35	38	31.5	38.5	34
40	36.5	39	42	35.5	42.5	38
50	42	44.5	47.5	41	48	43.5
63	49	51.5	54.5	48	55	50.5
80	59	61.5	64.5	58	65	60.5
100	69.5	72	75	68.5	75.5	71

12 Auto Switch Rail Mounting

Symbol
-XC13

Minimum Stroke for Auto Switch Mounting

[mm]

Auto switch model	Number of auto switches		
	1	2 Same surface	n (n: No. of auto switches) Same surface
D-M9□/M9□V **D-F7□V** **D-J79C**	5	5	10 + 10 (n – 2) (n = 4, 6 ···) Note)
D-M9□WV **D-M9□AV** **D-F7□WV** **D-F7BAV** **D-A79W**	10	15	10 + 15 (n – 2) (n = 4, 6 ···) Note)
D-M9□W **D-M9□A**	10	15	15 + 15 (n – 2) (n = 4, 6 ···) Note)
D-F7□ **D-J79**	5	5	15 + 15 (n – 2) (n = 4, 6 ···) Note)
D-F7□W/J79W **D-F7BA** **D-F79F/F7NT**	10	15	15 + 20 (n – 2) (n = 4, 6 ···) Note)
D-A7□/A80 **D-A73C/A80C**	5	10	15 + 10 (n – 2) (n = 4, 6 ···) Note)
D-A7□H **D-A80H**	5	10	15 + 15 (n – 2) (n = 4, 6 ···) Note)

Note) When "n" is an odd number, an even number that is one larger than this odd number is used for the calculation. However, the minimum even number is 4. So, 4 is used for the calculation when "n" is 1 to 3.

Auto Switch Mounting Brackets/Part No.

Auto switch model	Bore size [mm]
	ø **20** to ø **100**
D-M9□/M9□V **D-M9□W/M9□WV**	BQ2-012
D-M9□A/M9□AV	BQ2-012S

Note 1) When ordering the auto switches other than D-M9□□□ and D-F7BA(V) mentioned on the above, order auto switch mounting brackets BQ-1 separately.

Note 2) When adding D-M9□A(V), order a stainless steel screw set BBA2 together with BQ2-012S separately.
When adding the auto switch D-F7BA(V), order a stainless steel screw set BBA2 separately.

Operating Range

[mm]

Auto switch model	Bore size							
	20	**25**	**32**	**40**	**50**	**63**	**80**	**100**
D-M9□/M9□V **D-M9□W/M9□WV** **D-M9□A/M9□AV**	4	4	5	4	5.5	6.5	7.5	7
D-F7□/F79F/F7□V **D-J79/J79C** **D-F7□W/J79W/F7□WV** **D-F7BA/F7BAV** **D-F7NT**	4.5	4	4.5	5	5	6	6	6
D-A7□/A80 **D-A7□H/A80H** **D-A73C/A80C**	9	9	10	11	11	13.5	13	13.5
D-A79W	11	11	13	14	14	16.5	16	16.5

∗ Since the operating range is provided as a guideline including hysteresis, it cannot be guaranteed. (Assuming approximately ±30 % dispersion.) It may vary substantially depending on an ambient environment.

13 Head Cover Axial Port

Symbol **-XC20**

Head side port position is changed to the axial direction. (Standard head side port is plugged with hexagon socket head screw.)

Applicable Series

Description	Model	Action	Note
Standard type	CG1	Double acting, Single rod	Except with air cushion
	CG1	Single acting (Spring return/extend)	
Non-rotating rod type	CG1K	Double acting, Single rod	Except with air cushion
Direct mount type	CG1R	Double acting, Single rod	Except with air cushion
Direct mount, Non-rotating rod type	CG1KR	Double acting, Single rod	Except with air cushion*1

*1 The shape is the same as the existing product. Use the existing seal kit.

How to Order

Standard model no. – **XC20**

Head cover axial port

Specifications: Same as standard type

* Be sure to use the speed controller since head side port has no throttle.

Construction

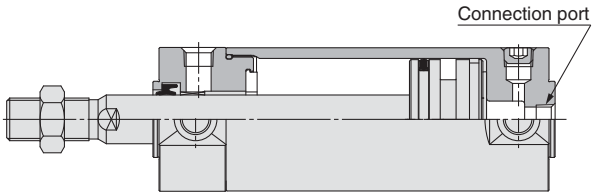

Bore size [mm]	Port size
20, 25, 32, 40	Rc⅛
50, 63	Rc¼

* Same dimensions as standard type except port size.

14 Fluororubber Seal

Symbol **-XC22**

Applicable Series

Description	Model	Action	Note
Standard type	CG1	Double acting, Single rod	Cylinders with rubber bumper have no bumper.
	CG1W	Double acting, Double rod	Cylinders with rubber bumper have no bumper.
Direct mount type	CG1R	Double acting, Single rod	Cylinders with rubber bumper have no bumper.

How to Order

Standard model no. – **XC22**

Fluororubber seal

Specifications

Seal material	Fluororubber
Ambient temperature range	With auto switch Note 1) : –10 °C to 60 °C Without auto switch : –10 °C to 70 °C (No freezing)
Specifications other than above and external dimensions	Same as standard type

Note 1) Please contact SMC, as the type of chemical and the operating temperature may not allow the use of this product.
Note 2) Cylinders with auto switches can also be produced; however, auto switch related parts (auto switch units, mounting brackets, built-in magnets) are the same as standard products.
Before using these, please contact SMC regarding their suitability for the operating environment.

15 Double Clevis and Double Knuckle Joint Pins Made of Stainless Steel

Symbol **-XC27**

To prevent the oscillating portion of the double clevis or the double knuckle joint from rusting, the material of the pin and the retaining ring has been changed to stainless steel.

Applicable Series

Description	Model	Action	Note
Standard type	CG1	Double acting, Single rod	Except with rod end bracket
	CG1	Single acting (Spring return/extend)	Except with rod end bracket
Non-rotating rod type	CG1K	Double acting, Single rod	Except with rod end bracket

Specifications

Mounting	Only double clevis type (D), double knuckle joint
Pin and retaining ring material	Stainless steel 304
Additional specifications	Same as standard type

How to Order

CG1D **Standard model no.** – **XC27**
- **Double clevis type**
- **Double clevis pin made of stainless steel**

Y – **G02, G03, G04, G05, G08, G10** – **XC27**
- **Double knuckle joint**
- **Double knuckle joint pin made of stainless steel**

IY – **G02, G03, G04, G05, G08, G10** – **XC27**

CD – **G02, G25, G03, G04, G05, G06** – **XC27**
- **Clevis pin Knuckle pin**
- **Clevis pin Knuckle pin made of stainless steel**

16 Double Knuckle Joint with Spring Pin

Symbol **-XC29**

To prevent loosening of the double knuckle joint

Applicable Series

Description	Model	Action	Note
Standard type	CG1	Double acting, Single rod	Except with rod end bracket
	CG1	Single acting/spring return type (S)	Except with rod end bracket

Specifications: Same as standard type

Dimensions: Same as standard type

How to Order

Standard model no. – **XC29**

Double knuckle joint with spring pin

17 With Coil Scraper

Symbol **-XC35**

It gets rid of frost, ice, weld spatter, cutting chips adhered to the piston rod, and protects the seals etc.

Applicable Series

Description	Model	Action	Note
Standard type	CG1	Double acting, Single rod	

Specifications: Same as standard type

How to Order

Standard model no. – **XC35**

With coil scraper

Dimensions (Dimensions other than below are the same as standard type.)

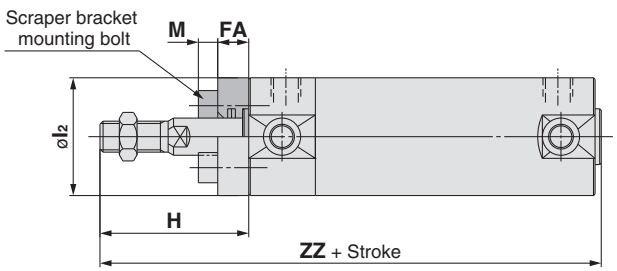

[mm]

Bore size	Stroke range		FA	H		l_2	M	ZZ	
	Standard	Long stroke		Male thread	Female thread			Male thread	Female thread
20	Up to 200	201 to 1500	6	39	27	27	4	110 (118)	98 (106)
25	Up to 300	301 to 1500	6	44	28	32	5	115 (123)	99 (107)
32	Up to 300	301 to 1500	6	44	28	38	5	117 (125)	101 (109)
40	Up to 300	301 to 1500	7	54	29	47	6	134 (143)	109 (118)
50	Up to 300	301 to 1500	7	62	30	58	8	154 (166)	122 (134)
63	Up to 300	301 to 1500	7	62	30	72	10	154 (166)	122 (134)

Note) ( ): Long stroke
∗ Other dimensions are the same as double acting, single rod, standard type.
∗ On the axial foot and the rod flange types, the mounting bracket is wedged and bolted between the cylinder and the scraper at the time of shipment. On other types, it is placed in the same package, (but not assembled).
∗ The long stroke shows the maximum manufacturable stroke. For details about maximum stroke that can be used for each mounting bracket, contact SMC.

18 Larger Throttle Diameter of Connection Port

Symbol **-XC37**

This is a cylinder with a piping port larger than the standard type.

Applicable Series

Description	Model	Action	Note
Standard type	CG1	Double acting, Single rod	∗ Except ø 80, ø 100
Double rod type	CG1W	Double acting, Double rod	Except with air cushion ∗ Except ø 80, ø 100

How to Order

Standard model no. – **XC37**

Larger throttle diameter of connection port

Specifications: Same as standard type

Dimensions (Throttle diameter of connection port)

Dimensions other than below are the same as standard type.

[mm]

Bore size	With rubber bumper	With air cushion	Standard type
20	5	3	(2.1)
25	5	3.5	(2.5)
32	6		(3.3)
40	7		(3.9)
50	9		(4.5)
63	9		(5.7)

∗ Use external stopper etc. not to be damaged with cylinder cover directly if exceeding the range of kinetic energy absorption.

19 Built-in Shock Absorber in Head Cover Side

Symbol
-XC42

A type of the CG1 series air cylinder in which a special shock absorber is enclosed in the head portion so that its ability to absorb energy during the retraction of the cylinder is considerably greater than the conventional air cushion.

Applicable Series

Description	Model	Action	Note
Standard type	CG1	Double acting, Single rod	

Specifications

Piston speed	50 to 1000 mm/s
Additional specifications	Same as standard type

∗ On the axial foot and head flange types, the bracket is mounted at the time of shipment. Others are shipped together, (but not assembled).

How to Order

Standard model no. – XC42

Built-in shock absorber in head cover side

Dimensions (Dimensions other than below are the same as the CG1 long stroke type.)

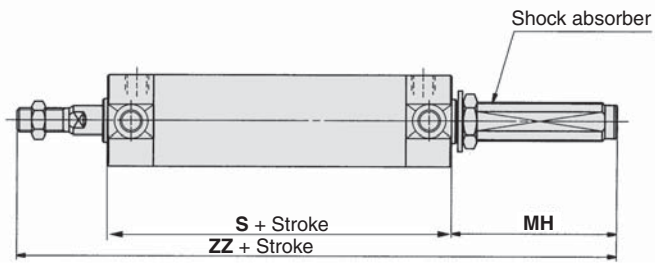

[mm]

Bore size	Stroke range	Shock absorber	S	MH	ZZ
20	10 to 350	RBAC0806	77	23.5	135.5
25	10 to 400	RBAC1007	77	31	148
32	15 to 450	RBAC1412	79	55	174
40	15 to 800	RBAC2015	87	62.5	199.5
50	15 to 1200	RBAC2015	102	55.5	215.5
63	25 to 1200	RBAC2725	102	92.5	252.5

∗ Shock absorbers are consumables.
The specifications for shock absorbers are the same as those for the RBC□□□□, but use the RBAC□□□□ when an external pressure is applied such as for a built-in cylinder. The maximum absorption energy may decrease depending on the operating conditions.

The shock absorber service life is different from that of the CG1 cylinder. Refer to the RB series Specific Product Precautions for the replacement period.

20 Grease for Food Processing Equipment

Symbol **-XC85**

Food grade grease (certified by NSF-H1) is used as lubricant.

Applicable Series

Description	Model	Action	Note
Standard type	CG1	Double acting, Single rod	
	CG1W	Double acting, Double rod	
Direct mount type	CG1R	Double acting, Single rod	

How to Order

Standard model no. – **XC85**

Grease for food processing equipment

Specifications

Ambient temperature range	–10 °C to 70 °C
Seal material	Nitrile rubber
Grease	Grease for food
Auto switch	Mountable
Dimensions	Same as standard type
Additional specifications	Same as standard type

⚠Warning

Precautions

Be aware that smoking cigarettes etc. after your hands have come into contact with the grease used in this cylinder can create a gas that is hazardous to humans.

Not installable zone

Food zone ····· An environment where the raw materials and materials of food products, semi-finished food products and food products that make direct or indirect contact in a normal processing process.

Splash zone ····· An area where a portion of food products accidentally splash and stick under the intended operating conditions. An environment where food products that enter this area do not return to the food product contact portion again, and are not used as food products.

Installable zone

Non-food zone ····· Other environments including the food splash zone, except for the food contact portions.

Note 1) Avoid using this product in the food zone. (Refer to the figure on the right.)
Note 2) When the product is used in an area of liquid splash, or a water resistant function is required for the product, please consult SMC.
Note 3) Operate without lubrication from a pneumatic system lubricator.
Note 4) Use the following grease pack for the maintenance work. **GR-H-010** (Grease: 10 g)
Note 5) Please contact SMC for details about the maintenance intervals for this cylinder, which differ from those of the standard cylinder.

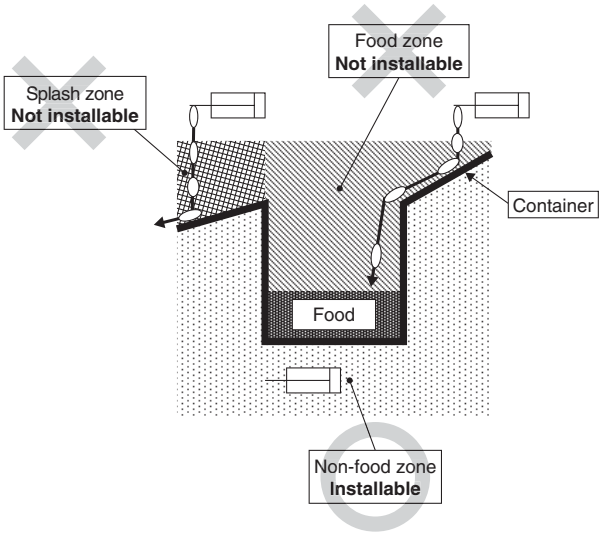

21 PTFE Grease

Symbol **-X446**

Applicable Series

Description	Model	Action	Note
Standard type	CG1	Double acting, Single rod	Except with air cushion

How to Order

Standard model no. – **X446**

PTFE grease

Specifications: Same as standard type

Dimensions: Same as standard type

∗ When grease is necessary for maintenance, grease pack is available, please order it separately.
GR-F-005 (Grease: 5 g)

⚠ Safety Instructions

These safety instructions are intended to prevent hazardous situations and/or equipment damage. These instructions indicate the level of potential hazard with the labels of **"Caution," "Warning"** or **"Danger."** They are all important notes for safety and must be followed in addition to International Standards (ISO/IEC)*1), and other safety regulations.

⚠ Caution: **Caution** indicates a hazard with a low level of risk which, if not avoided, could result in minor or moderate injury.

⚠ Warning: **Warning** indicates a hazard with a medium level of risk which, if not avoided, could result in death or serious injury.

⚠ Danger : **Danger** indicates a hazard with a high level of risk which, if not avoided, will result in death or serious injury.

*1) ISO 4414: Pneumatic fluid power – General rules relating to systems.
ISO 4413: Hydraulic fluid power – General rules relating to systems.
IEC 60204-1: Safety of machinery – Electrical equipment of machines.
(Part 1: General requirements)
ISO 10218-1: Manipulating industrial robots - Safety.
etc.

⚠ Warning

1. **The compatibility of the product is the responsibility of the person who designs the equipment or decides its specifications.**
   Since the product specified here is used under various operating conditions, its compatibility with specific equipment must be decided by the person who designs the equipment or decides its specifications based on necessary analysis and test results. The expected performance and safety assurance of the equipment will be the responsibility of the person who has determined its compatibility with the product. This person should also continuously review all specifications of the product referring to its latest catalogue information, with a view to giving due consideration to any possibility of equipment failure when configuring the equipment.
2. **Only personnel with appropriate training should operate machinery and equipment.**
   The product specified here may become unsafe if handled incorrectly. The assembly, operation and maintenance of machines or equipment including our products must be performed by an operator who is appropriately trained and experienced.
3. **Do not service or attempt to remove product and machinery/equipment until safety is confirmed.**
   1. The inspection and maintenance of machinery/equipment should only be performed after measures to prevent falling or runaway of the driven objects have been confirmed.
   2. When the product is to be removed, confirm that the safety measures as mentioned above are implemented and the power from any appropriate source is cut, and read and understand the specific product precautions of all relevant products carefully.
   3. Before machinery/equipment is restarted, take measures to prevent unexpected operation and malfunction.
4. **Contact SMC beforehand and take special consideration of safety measures if the product is to be used in any of the following conditions.**
   1. Conditions and environments outside of the given specifications, or use outdoors or in a place exposed to direct sunlight.
   2. Installation on equipment in conjunction with atomic energy, railways, air navigation, space, shipping, vehicles, military, medical treatment, combustion and recreation, or equipment in contact with food and beverages, emergency stop circuits, clutch and brake circuits in press applications, safety equipment or other applications unsuitable for the standard specifications described in the product catalogue.
   3. An application which could have negative effects on people, property, or animals requiring special safety analysis.
   4. Use in an interlock circuit, which requires the provision of double interlock for possible failure by using a mechanical protective function, and periodical checks to confirm proper operation.

Limited warranty and Disclaimer/ Compliance Requirements

The product used is subject to the following "Limited warranty and Disclaimer" and "Compliance Requirements".
Read and accept them before using the product.

Limited warranty and Disclaimer

1. The warranty period of the product is 1 year in service or 1.5 years after the product is delivered, wichever is first.*2)
   Also, the product may have specified durability, running distance or replacement parts. Please consult your nearest sales branch.
2. For any failure or damage reported within the warranty period which is clearly our responsibility, a replacement product or necessary parts will be provided.
   This limited warranty applies only to our product independently, and not to any other damage incurred due to the failure of the product.
3. Prior to using SMC products, please read and understand the warranty terms and disclaimers noted in the specified catalogue for the particular products.

*2) **Vacuum pads are excluded from this 1 year warranty.**
A vacuum pad is a consumable part, so it is warranted for a year after it is delivered.
Also, even within the warranty period, the wear of a product due to the use of the vacuum pad or failure due to the deterioration of rubber material are not covered by the limited warranty.

Compliance Requirements

1. The use of SMC products with production equipment for the manufacture of weapons of mass destruction (WMD) or any other weapon is strictly prohibited.
2. The exports of SMC products or technology from one country to another are governed by the relevant security laws and regulations of the countries involved in the transaction. Prior to the shipment of a SMC product to another country, assure that all local rules governing that export are known and followed.

⚠ Caution

1. **The product is provided for use in manufacturing industries.**
   The product herein described is basically provided for peaceful use in manufacturing industries.
   If considering using the product in other industries, consult SMC beforehand and exchange specifications or a contract if necessary.
   If anything is unclear, contact your nearest sales branch.

⚠ Caution

SMC products are not intended for use as instruments for legal metrology.
Measurement instruments that SMC manufactures or sells have not been qualified by type approval tests relevant to the metrology (measurement) laws of each country. Therefore, SMC products cannot be used for business or certification ordained by the metrology (measurement) laws of each country.

⚠ Safety Instructions Be sure to read "Handling Precautions for SMC Products" (M-E03-3) before using.

SMC Corporation (Europe)

Austria	☎ +43 (0)2262622800	www.smc.at	office@smc.at
Belgium	☎ +32 (0)33551464	www.smcpneumatics.be	info@smcpneumatics.be
Bulgaria	☎ +359 (0)2807670	www.smc.bg	office@smc.bg
Croatia	☎ +385 (0)13707288	www.smc.hr	office@smc.hr
Czech Republic	☎ +420 541424611	www.smc.cz	office@smc.cz
Denmark	☎ +45 70252900	www.smcdk.com	smc@smcdk.com
Estonia	☎ +372 6510370	www.smcpneumatics.ee	smc@smcpneumatics.ee
Finland	☎ +358 207513513	www.smc.fi	smcfi@smc.fi
France	☎ +33 (0)164761000	www.smc-france.fr	promotion@smc-france.fr
Germany	☎ +49 (0)61034020	www.smc.de	info@smc.de
Greece	☎ +30 210 2717265	www.smchellas.gr	sales@smchellas.gr
Hungary	☎ +36 23511390	www.smc.hu	office@smc.hu
Ireland	☎ +353 (0)14039000	www.smcpneumatics.ie	sales@smcpneumatics.ie
Italy	☎ +39 0292711	www.smcitalia.it	mailbox@smcitalia.it
Latvia	☎ +371 67817700	www.smclv.lv	info@smclv.lv
Lithuania	☎ +370 5 2308118	www.smclt.lt	info@smclt.lt
Netherlands	☎ +31 (0)205318888	www.smcpneumatics.nl	info@smcpneumatics.nl
Norway	☎ +47 67129020	www.smc-norge.no	post@smc-norge.no
Poland	☎ +48 222119600	www.smc.pl	office@smc.pl
Portugal	☎ +351 226166570	www.smc.eu	postpt@smc.smces.es
Romania	☎ +40 213205111	www.smcromania.ro	smcromania@smcromania.ro
Russia	☎ +7 8127185445	www.smc-pneumatik.ru	info@smc-pneumatik.ru
Slovakia	☎ +421 (0)413213212	www.smc.sk	office@smc.sk
Slovenia	☎ +386 (0)73885412	www.smc.si	office@smc.si
Spain	☎ +34 902184100	www.smc.eu	post@smc.smces.es
Sweden	☎ +46 (0)86031200	www.smc.nu	post@smc.nu
Switzerland	☎ +41 (0)523963131	www.smc.ch	info@smc.ch
Turkey	☎ +90 212 489 0 440	www.smcpnomatik.com.tr	info@smcpnomatik.com.tr
UK	☎ +44 (0)845 121 5122	www.smcpneumatics.co.uk	sales@smcpneumatics.co.uk

SMC CORPORATION Akihabara UDX 15F, 4-14-1, Sotokanda, Chiyoda-ku, Tokyo 101-0021, JAPAN Phone: 03-5207-8249 FAX: 03-5298-5362

1st printing TU printing TU 00 Printed in Spain