1.1 Scope.

This specification covers the detail requirement for a precision monolithic laser-trimmed quad BiFET amplifier.

1.2 Part Number.

The complete part number per Table 1 of this specification is as follows:

Device	Part Number
−1	AD713S(Q)/883B
−2	AD713T(Q)/883B

1.2.3 Case Outline.

See Appendix 1 of General Specification ADI-M-1000: package outline:

(X)	Package	Description
Q	Q-14	14-Pin Cerdip Package

1.3 Absolute Maximum Ratings. ($T_A = +25°C$ unless otherwise noted)

Supply Voltage	±18 V
Internal Power Dissipation	500 mW
Input Voltage	±18 V
Output Short Circuit Duration	Indefinite
Differential Input Voltage	$+V_S$ and $-V_S$
Storage Temperature Range	−65°C to +150°C
Operating Temperature Range	−55°C to +125°C
Lead Temperature Range (Soldering 60 sec)	+300°C

1.5 Thermal Characteristics.

Thermal Resistance θ_{JC} = 30°C/W for Q-14
θ_{JA} = 110°C/W for Q-14

AD713—SPECIFICATIONS

Table 1.

Test	Symbol	Device	Sub Group 1	Sub Group 2, 3	Test Condition[1]	Units
Input Offset Voltage[2]	V_{OS}	−1 −2	1.5 1.5	2.0 1.0		±mV max
Power Supply Rejection Ratio	PSRR	−1 −2	78 78	76 84		dB min
Input Bias Current[3]	I_B	−1, −2	150		Either Input, V_{CM} = 0	±pA max
		−1, −2	200		Either Input, V_{CM} = +10 V	
Input Offset Current[3]	I_{OS}	−1, −2	75		V_{CM} = 0	±pA max
Slew Rate	t_{SR}	−1, −2	16		Unity Gain Inverter	V/μs min
Common-Mode Rejection Ratio	CMRR	−1 −2	78 78	76 82	V_{CM} = ±10 V	dB min
		−1 −2	72 72	70 74	V_{CM} = ±11 V	
Open Loop Gain	A_{OL}	−1, −2	150	100	V_O = ±10 V, R_L ≥ 2 kΩ	V/mV min
Output Voltage Swing	V_{OUT}	−1, −2	+13/−12.5	±12	R_L ≥ 2 kΩ	V min
Power Supply Current	I_Q	−1, −2	13.5			mA max
Input OffsetVoltage Match[4]	V_{OSM}	−1 −2	1.8 1.8	2.3 1.3		±mV max
Input Bias Current Match[4]	I_{BM}	−1, −2	100			±pA max

NOTE
[1]V_S = ±15 V unless otherwise noted.
[2]Input offset voltage specifications are guaranteed with V_{OS} unnulled at T_A = +25°C.
[3]Bias current specifications guaranteed after 5 minutes of operation at T_A = +25°C. For temperatures above +25°C, the current doubles every 10°C.
[4]Matching is defined as the difference between parameters of the two amplifiers.

3.2.1 Functional Block Diagram and Terminal Assignments.

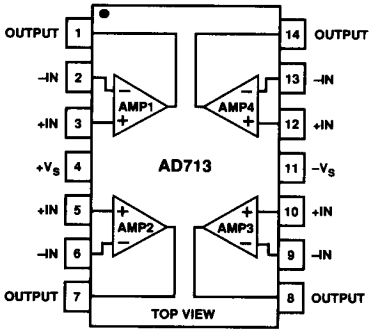

3.2.4 Microcircuit Technology Group.

This microcircuit is covered by technology group (85).

4.2.1 Life Test/Burn-In Circuit.
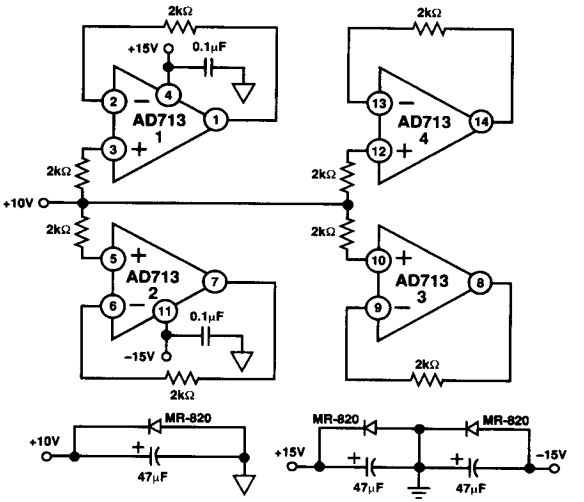
Steady state life test is per MIL-STD-883 Method 1005. Burn-in is per MIL-STD-883 Method 1015 test condition (B).