Safety device - PSR-MM30-2NO-2DO-24DC-SC - 2702357

Please be informed that the data shown in this PDF Document is generated from our Online Catalog. Please find the complete data in the user's documentation. Our General Terms of Use for Downloads are valid
(http://phoenixcontact.com/download)

Two-channel zero-speed and over-speed safety relays up to SIL 3, Cat. 4, PL e, 2 safe relay outputs, suitable for connecting HTL, TTL or sine/cosine encoders as well as proximity switches, plug-in screw terminal block, width: 22.5 mm

Your advantages

- Monitoring of up to three different speeds as well as downtime
- Compatible with a range of motion sensors
- Easy parameterization and online monitoring with the PSRmotion software, which can be downloaded free of charge
- Force-guided relay contacts, parameterizable signal outputs
- Up to Cat.4/PL e according to ISO 13849-1, SILCL 3 according to IEC 62061

RoHS H D W PL EN ISO 13849 SILCL IEC 62061

Key Commercial Data

Packing unit	1 pc
GTIN	4 055626 133225
GTIN	4055626133225
Weight per Piece (excluding packing)	196.300 g
Sales Key	DNA242

Technical data

Note

Utilization restriction	EMC: class A product, see manufacturer's declaration in the download area

Dimensions

Width	22.5 mm
Height	112.2 mm
Depth	114.5 mm

Ambient conditions

Ambient temperature (operation)	-40 °C ... 55 °C (observe derating)

Safety device - PSR-MM30-2NO-2DO-24DC-SC - 2702357

Technical data

Ambient conditions

Ambient temperature (storage/transport)	-40 °C ... 70 °C
Max. permissible relative humidity (operation)	75 % (on average, 85% infrequently, non-condensing)
Max. permissible humidity (storage/transport)	75 % (on average, 85% infrequently, non-condensing)
Maximum altitude	≤ 2000 m (Above sea level)

Power supply

Designation	A1/A2
Rated control circuit supply voltage U_S	24 V DC -15 % / +10 % (provide external protection)
Rated control supply current I_S	typ. 74 mA
Power consumption at U_S	typ. 1.78 W
Inrush current	< 18 A (Δt = 500 µs at U_s)
Filter time	2 ms (at A1 in the event of voltage dips at U_s)
Protective circuit	Serial protection against polarity reversal 33 V suppressor diode

Digital inputs

Input name	Operating mode and monitoring inputs
Description of the input	NPN, IEC 61131-2, type 1
Number of inputs	1 (Non-safety-related start input: S34)
	3 (Safety-related operating mode inputs: I1, I2, I3)
	2 (Safety-related monitoring inputs: MI1, MI2)
Input voltage range "0" signal	0 V DC ... 5 V DC
Input voltage range "1" signal	15 V DC ... 30 V DC
Input current range "0" signal	0 mA ... 1.5 mA
Inrush current	< 5 mA
Current consumption	typ. 4 mA (at U_S)
Filter time	max. 2 ms (Test pulse width; low test pulses for operating mode and monitoring inputs)
	Test pulse rate = 5 x Test pulse width
Max. permissible overall conductor resistance	150 Ω
Discrepancy time	2 s (I1, I2, I3)
	2.5 s (MI1, MI2)
Protective circuit/component	33 V suppressor diode

Measuring inputs

Input name	Proximity switch inputs
Description of the input	NPN, IEC 61131-2, type 1
Number of inputs	2 (Safety-related proximity switch inputs: IN1 IN2)
Precision	± 2 % (in reference to the parameterized limit value)
Inrush current	< 12 mA
Current consumption	typ. 10 mA (at U_S)
Input voltage range "0" signal	0 V DC ... 5 V DC
Input voltage range "1" signal	15 V DC ... 30 V DC

Safety device - PSR-MM30-2NO-2DO-24DC-SC - 2702357

Technical data

Measuring inputs

Input current range "0" signal	0 mA ... 1.5 mA
Max. permissible overall conductor resistance	150 Ω
Limit frequency	max. 2 kHz (Minimum pulse duration: 2 µs)
Protective circuit	33 V suppressor diode
Input name	Encoder input
Description of the input	TTL, HTL, Sin/Cos
Number of inputs	1 (Safety-related encoder input, RJ45)
Precision	± 2 % (in reference to the parameterized limit value)
Current consumption	< 3 mA (Per track for U_S)
Max. permissible overall conductor resistance	150 Ω
Limit frequency	max. 400 kHz
	max. 250 kHz For active diagnostic safety encoder
HTL signal form	0 V DC ... 3 V DC (Low)
	12 V DC ... 30 V DC (High)
TTL signal form	0 V DC ... 0.9 V DC (Low)
	2.5 V DC ... 5 V DC (High)
Sine/cosine signal form	2 V DC ... 3 V DC (1 V_{pp} differential signal)

Relay outputs: enabling current path

Output name	Enabling current path
Output description	2 NO contacts each in series, without delay, floating
Number of outputs	2 (safety-related N/O contacts: 13/14, 23/24)
Contact type	2 enabling current paths
Contact material	$AgSnO_2$
Switching voltage	min. 12 V AC/DC
	max. 250 V AC/DC (Observe the load curve)
Limiting continuous current	6 A
Inrush current	min. 3 mA
	max. 6 A
Sq. Total current	72 A^2 (observe derating)
Switching capacity	min. 60 mW
Switching frequency	max. 0.5 Hz
Mechanical service life	10x 10^6 cycles
Switching capacity according to IEC 60947-5-1	4 A (24 V (DC13))
	5 A (250 V (AC15))
Output fuse	6 A gL/gG

Alarm outputs

Output description	PNP
Number of outputs	2 (Non-safety-related signal outputs: MO1, MO2)
Voltage	approx. 22 V DC (U_s - 2 V)

Safety device - PSR-MM30-2NO-2DO-24DC-SC - 2702357

Technical data

Alarm outputs

Current	max. 100 mA
Maximum inrush current	500 mA (Δt = 1 ms at U_s)
Protective circuit/component	33 V suppressor diode
Short-circuit protection	no

Times

Typical response time at US	< 200 ms (For U_s autostart)
	< 150 ms (For U_s manual, monitored start)
Delay time range	0 s ... 10 s ±10 % (Adjustable switch-on delay for downtime contacts 23/24)
Restart time	< 1 s (Boot time)
Recovery time	< 1 s

General

Relay type	Electromechanical relay with forcibly guided contacts in accordance with IEC/EN 61810-3 (EN 50205)
Nominal operating mode	100% operating factor
Net weight	196.3 g
Mounting position	vertical or horizontal
Mounting type	DIN rail mounting
Assembly instructions	See derating curve
Degree of protection	IP20
Min. degree of protection of inst. location	IP54
Housing material	PBT
Housing color	yellow
Operating voltage display	1 x green LED (PWR)
Status display	2x LED green (OUT1, OUT2)

Connection data

Connection method	Screw connection
pluggable	Yes
Conductor cross section solid min.	0.2 mm²
Conductor cross section solid max.	2.5 mm²
Conductor cross section flexible min.	0.2 mm²
Conductor cross section flexible max.	2.5 mm²
Conductor cross section AWG min.	24
Conductor cross section AWG max.	12
Stripping length	7 mm
Screw thread	M3
Torque	0.5 Nm ... 0.6 Nm

Safety-related characteristic data

Stop category	0

Safety device - PSR-MM30-2NO-2DO-24DC-SC - 2702357

Technical data

Safety-related characteristic data

Designation	IEC 61508 - High demand
Safety Integrity Level (SIL)	3
Designation	EN ISO 13849
Performance level (PL)	e (6 A DC1, 17520 switching cycles/year)
Category	4
Designation	EN 62061
Safety Integrity Level Claim Limit (SIL CL)	3

Standards and Regulations

Designation	Air clearances and creepage distances between the power circuits
Standards/regulations	DIN EN 50178, EN 60947-5-1
Rated insulation voltage	250 V AC
Rated surge voltage/insulation	Basic insulation 4 kV between all current paths and housing
	Safe isolation, reinforced insulation 6 kV between input circuit (A1/A2, I1, I2, I3, MI1, MI2, IN1, IN2, S34, MO1, MO2, RJ45, USB) and the enabling current paths (13/14, 23/24)
Degree of pollution	2
Overvoltage category	III
Shock	15g
Vibration (operation)	10 Hz ... 150 Hz, 2g

Environmental Product Compliance

REACh SVHC	Lead 7439-92-1
China RoHS	Environmentally Friendly Use Period = 50
	For details about hazardous substances go to tab “Downloads”, Category “Manufacturer's declaration”

Drawings

Block diagram

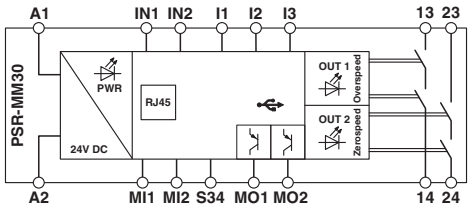

Safety device - PSR-MM30-2NO-2DO-24DC-SC - 2702357

Circuit diagram

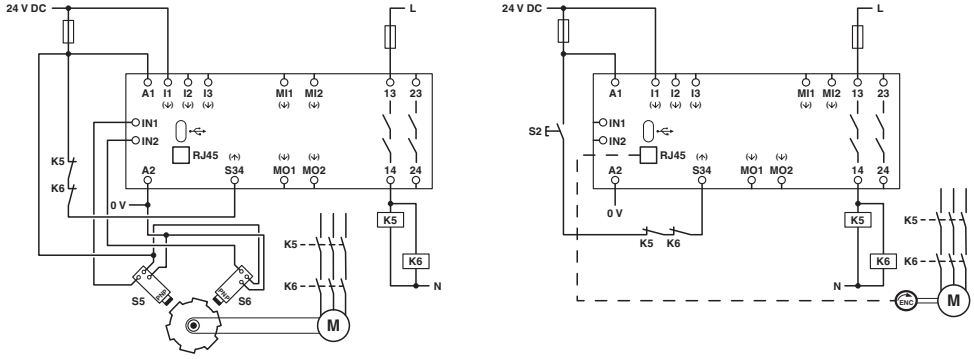

Classifications

eCl@ss

eCl@ss 4.0	27371102
eCl@ss 4.1	27371102
eCl@ss 5.0	27371901
eCl@ss 5.1	27371901
eCl@ss 6.0	27371800
eCl@ss 7.0	27371811
eCl@ss 8.0	27371811
eCl@ss 9.0	27371811

ETIM

ETIM 3.0	EC001449
ETIM 4.0	EC001449
ETIM 5.0	EC001448
ETIM 6.0	EC001448
ETIM 7.0	EC001448

UNSPSC

UNSPSC 6.01	30211901
UNSPSC 7.0901	39121501
UNSPSC 11	39121501
UNSPSC 12.01	39121501
UNSPSC 13.2	39122331

Approvals

Approvals

Approvals

UL Listed / cUL Listed / Functional Safety / Functional Safety / cULus Listed

Safety device - PSR-MM30-2NO-2DO-24DC-SC - 2702357

Approvals

Ex Approvals

Approval details

UL Listed		http://database.ul.com/cgi-bin/XYV/template/LISEXT/1FRAME/index.htm	FILE E 140324
cUL Listed		http://database.ul.com/cgi-bin/XYV/template/LISEXT/1FRAME/index.htm	FILE E 140324
Functional Safety			968/FSP 1755.00/19
Functional Safety			01/205/5690.00/19
cULus Listed			

Accessories

Accessories

Programming cable

Connecting cable - CAB-USB A/MICRO USB B/2,0M - 2701626

Connecting cable, for connecting the controller to a PC for PC Worx and LOGIC+, USB A to micro USB B, 2 m in length.