Material-No.	Order-No.	Shell Size / for No. of Contacts	B ±0.1	C ±0.3	D ±0.3	øF1 min - max	øF2 max I	Rubber bushing	H ±0.3	U ±0.4	V ±0.15	W +0.2
1731140310	FMK1G-09P-5847	1 / 9	25	31.6	39.5	3 - 9.5	6.5	FKT1-2	42	30.8	25	16.9
1731140312	FMK2G-15P-5847	2 / 15	33.3	40	41	3 - 8.5	6.5	FKT1-2	43.5	39.1	33.3	25.2
1731140314	FMK3G-25P-5847	3 / 25	47.04	53.7	45	3 - 8.5	8	FKT1-2A	47.5	53	47.04	38.9

øF1 = Cable diameter without rubber bushing
øF2 = Cable diameter with rubber bushing

FMKyG-xxP-5847

*1) *2)

e.g. FMK3G-25P-5847

*1) y for hood size 1, 2 or 3
*2) xx No. of contacts 09, 15 or 25

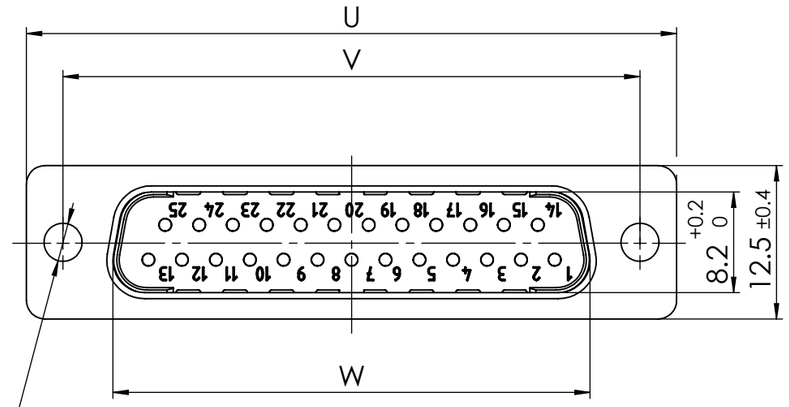

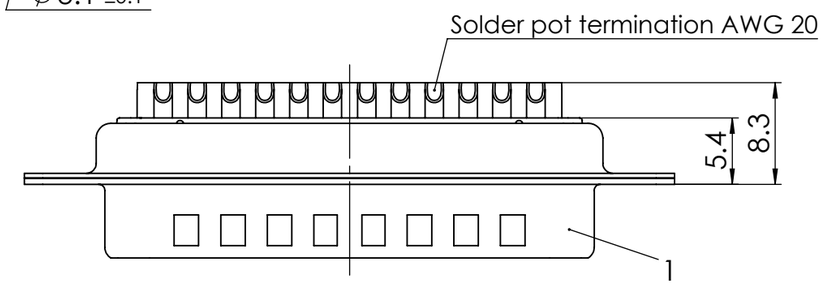

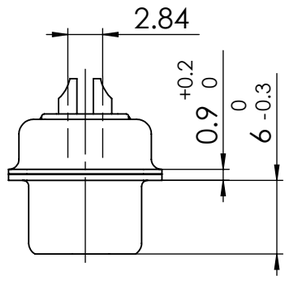

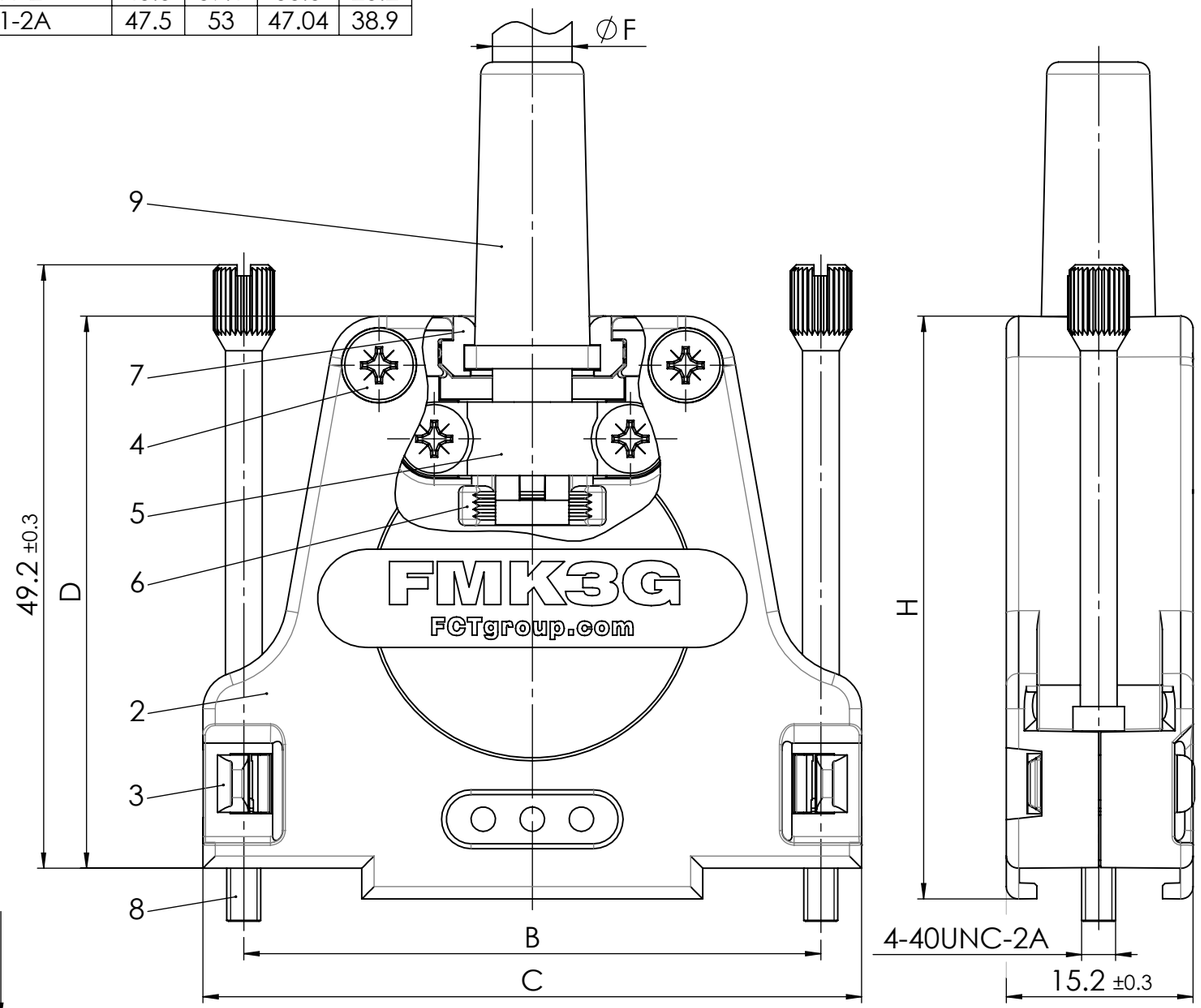

No.	St.	Part	Type Description/Material	Surface plating/Colour/Class
9	1	Rubber bushing	TPE	black
8	2	Knurled thumb screw	FRS1/5-K190 4-40 / Brass	nickel plated
7	0/2	Cable reduction plate	Zinc die-cast	nickel plated
6	1	Strain relief	ABS	nickel plated
5	1	Cable clamp	Steel	tin plated
4	4	Screw	Case hardened steel	zinc plated
3	2	Catch spring	PEI	black
2	1	Hood	FMKyG / Zinc die-cast	nickel plated
1	1	D-Sub Connector	FxxP0G1	

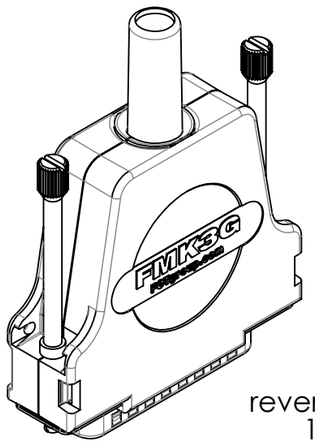

reverse side
1 : 1

RoHS compliant
by exemption

max. torque are 40 Ncm
Part-No. 9 not mounted
FMK1G-09P-5847 with Part-No. 6 alternatively in Zinc die-cast, tin plated
FMK1G-09P-5847 without Part-No. 7

SYMBOLS
= 0
= 0
= 0
= 0
= 0
= 0
= 0
= 0
= 0

THIS DRAWING CONTAINS INFORMATION THAT IS PROPRIETARY TO MOLEX ELECTRONIC TECHNOLOGIES, LLC AND SHOULD NOT BE USED WITHOUT WRITTEN PERMISSION

DIMENSION UNITS: mm
SCALE: 2:1
MEASUREMENTS WITHOUT TOLERANCE ACC. TO: ISO 2768-m

REV.	CH.-NO.
6	24382
5	24131
4	24071
3	24029
2	23989
1	

REPLACEMENT FOR:

CURRENT REVISION
DRWN: DRAWN BY mteubel 21-09-2022
APPR: APPR BY bwittek 21-09-2022

INITIAL REVISION
DRWN: DRAWN BY ameyerrichte 10-02-2016
APPR: APPR BY BWittek 12-02-2016

THIRD ANGLE PROJECTION
DRAWING: A3-SIZE

molex

FCT Hood Connector Set

PRODUCT CUSTOMER DRAWING

MATERIAL NUMBER: see table
REVISION: 6
DOCUMENT NUMBER: FMKyG-xxP-5847
CUSTOMER: GENERAL MARKET
SHEET NUMBER: 1 OF 1

COMMENT:
ALL RIGHTS ARE RESERVED BY US FOR THIS DRAWING, WITHOUT OUR PRIOR CONSENT, IT MAY NEITHER BE DUBLICATED NOR MADE AVAILABLE TO A THIRD PARTY, AND IT ALSO MAY NOT BE IMPROPERLY USED BY TE RECEIVER, OR A THIRD PARTY.