Angle sensor (Hall) 91400

Connector

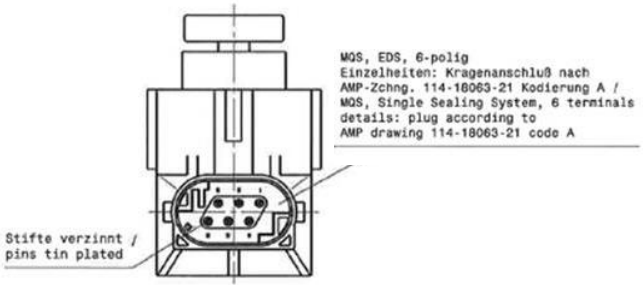

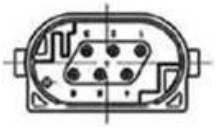

	Signal 1	Signal 6
+	5	5
-	1	1
out	4	6

Female connector on request

Dimensions

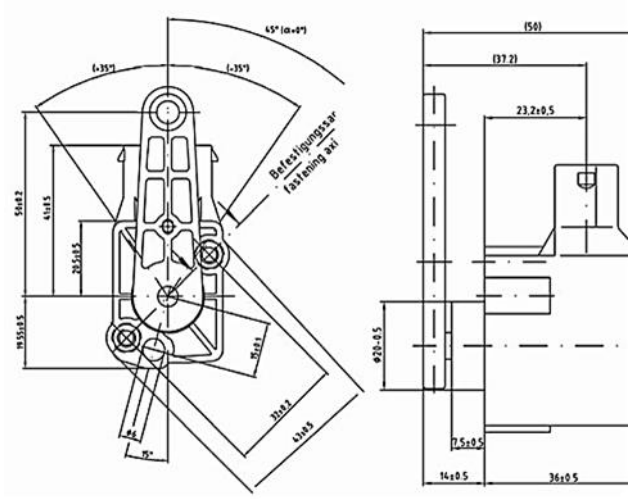

Supply Current	5 V 6 mA max. per signal	**Temperature range**	- 40 °C to + 100 °C
Output signal	Analogic, 2 signal	**Sealing grade**	Protection class according to DIN 40050-9 housing IP6K6; connector IP6K9K
Specification	ABN 41501	**Drawing**	91400000 Index 01

Angle range (degrees)

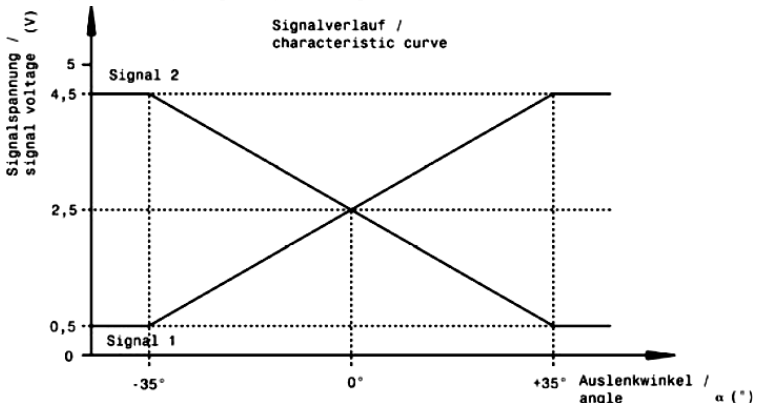

General Note This datasheet does not give any information on product availability. The information given is just meant to describe the product and is not to be considered as guaranteed characteristics in the legal sense. All products are subject to design changes in the interest of further technical development. Copyright: KYOCERA AVX Components (Werne) GmbH (GER)
www.kyocera-avx.com