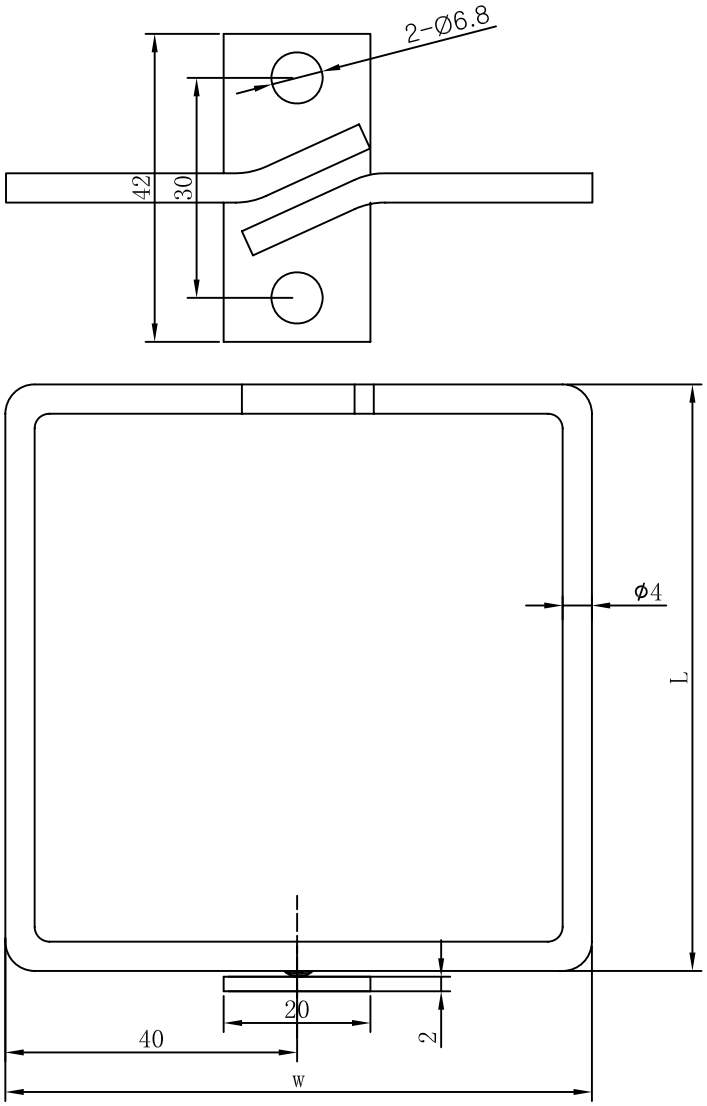

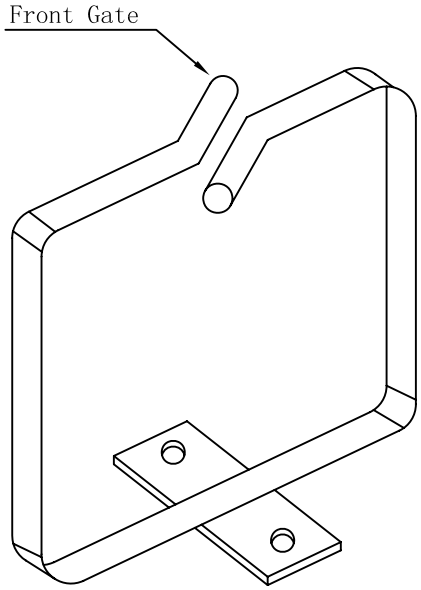

AN ITEM NO.	SIZE	EAN CODE	PACKING
ALL-S0001007	L=80mm × W=80mm	4038816224569	1PC/SLIP BAG, 20PCS/BOX+LABEL, 15BOX/BIG BOX
ALL-S0001004	L=80mm × W=40mm	4038816224538	1PC/SLIP BAG, 25PCS/BOX+LABEL, 15BOX/BIG BOX
ALL-S0001001	L=40mm × W=40mm	4038816224507	1PC/SLIP BAG, 30PCS/BOX+LABEL, 15BOX/BIG BOX

NOTE:
RoHS COMPLIANT
MATERIAL LIST:

①	METAL	Ferrum for chromium plating		
NO.	PARTS NAME	SPECIFICATION DESCRIPTION	QT'Y	REMARK
			2010.12.01	A
BY	CHK	REVISION RECORD MODIFICATIONS	DATE	REV.

SYNERGY 21

CUSTOMER		REF.		ITEM NO.	see chart
PRODUCT NAME	Cable Routing Bracket, metal	manufacture country:	CHINA	UNIT	MM
DRAWNBY	CHECKBY	APPOBY	DATE		
SYNERGY 21	SYNERGY 21	SYNERGY 21	2010.12.01		