KL

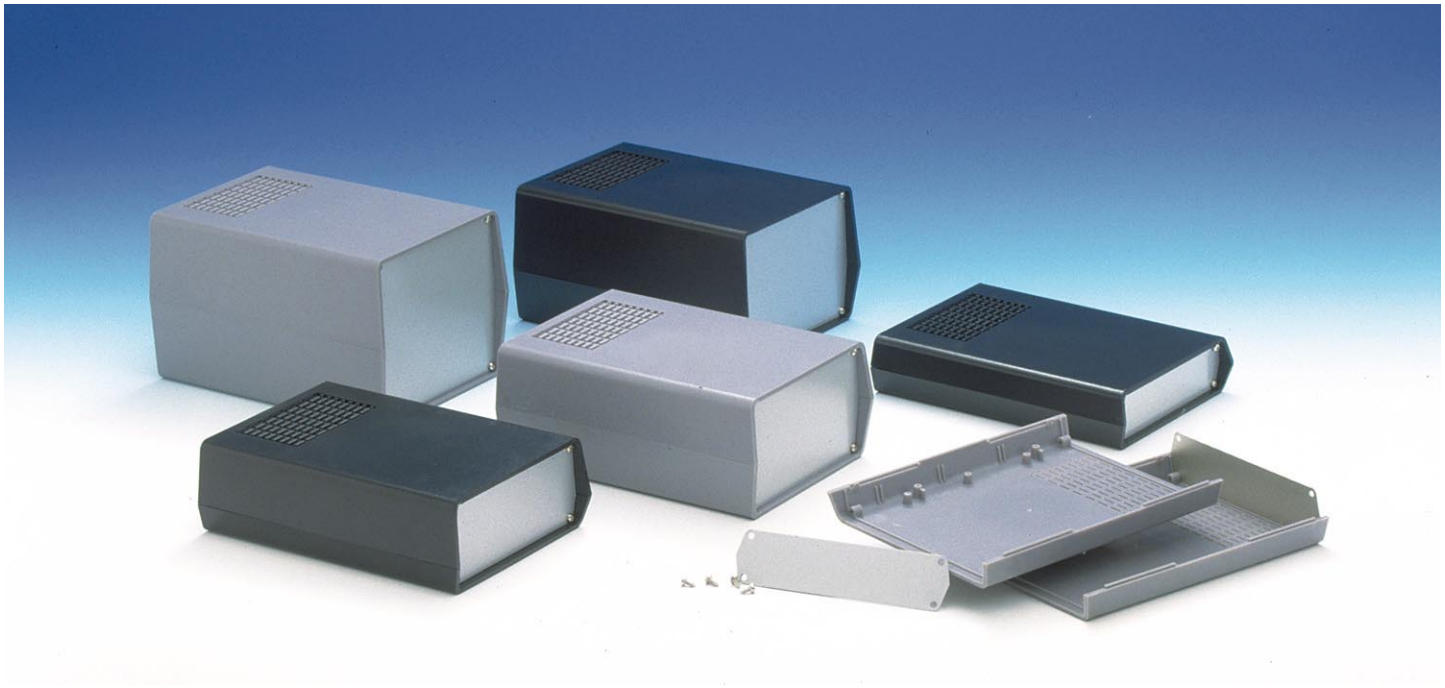

DESIGN

A polystyrene enclosure with a vented cover and base for aeration. Front and rear 1 mm aluminium panels. Each half-shell has integral PCB guides and mounting studs. Mat surface finish. Closing by eight screws. The model KL22 is available with light gray plastic panels (RAL 9018).

ACCESSORIES

PCB guides (Mod. PR102)
Plastic panels for model KL22 (Mod. PPKL)

OPTIONS

Flame retardant materials
CNC machining
Punching
Silk-screening

MATERIALS and COLOURS

POLYSTYRENE		*ALUMINIUM*	
Black	RAL 9004	Silver	RAL 9006
Dark Gray	RAL 7042		

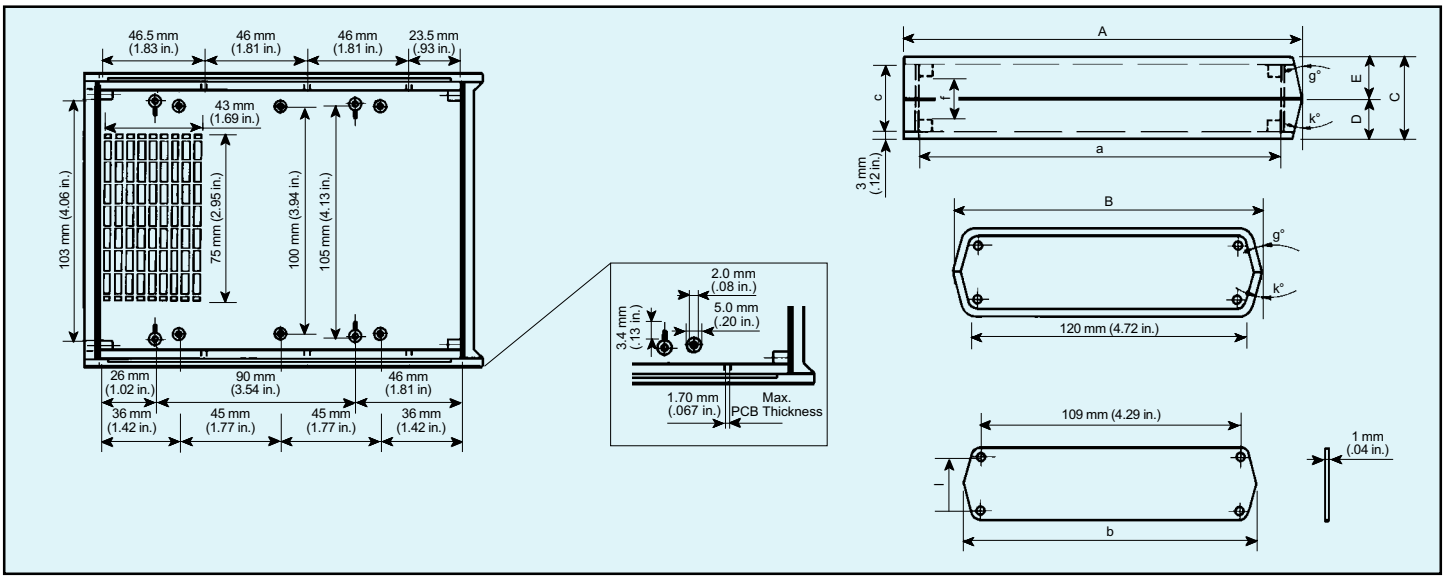

MODEL	DIMENSIONS mm																	
	EXTERNAL						INTERNAL											
	A	B	C	D	E	F	a	b	c	d	e	f	g	h	i	j	k	l
KL11	178.0	128.0	36.0	18.0	18.0		162.0	122.0	30.0									
KL12	178.0	128.0	54.0	18.0	36.0		162.0	122.0	48.0									
KL22	178.0	128.0	72.0	36.0	36.0		162.0	122.0	66.0									
KL23	178.0	128.0	90.0	36.0	54.0		162.0	122.0	84.0									
KL33	178.0	128.0	108.0	54.0	54.0		162.0	122.0	102.0									

AUS

DESIGN

A polystyrene enclosure with a vented cover and base for aeration. Front and rear 1 mm aluminium panels. Each half-shell has integral PCB guides and mounting studs. Mat surface finish. Closing by eight screws.

ACCESSORIES

PCB guides (Mod. PR102) for models AUS22, AUS23, AUS33

OPTIONS

Flame retardant materials
CNC machining
Punching
Silk-screening

MATERIALS and COLOURS

POLYSTYRENE		*ALUMINIUM*	
Black	RAL 9004	Silver	RAL 9006
Dark Gray	RAL 7042		

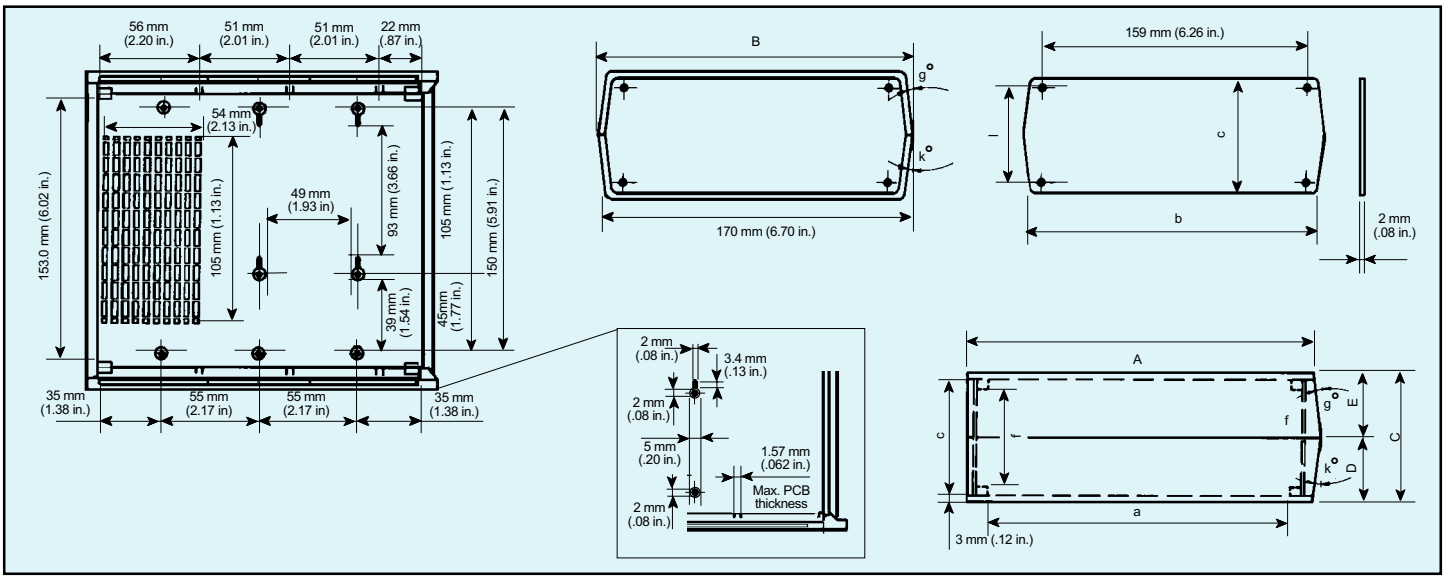

MODEL	DIMENSIONS mm																	
	EXTERNAL						INTERNAL											
	A	B	C	D	E	F	a	b	c	d	e	f	g	h	i	j	k	l
AUS11	198.0	178.0	36.0	18.0	18.0		180.0	172.0	30.0									
AUS12	198.0	178.0	54.0	18.0	36.0		180.0	172.0	48.0									
AUS22	198.0	178.0	72.0	36.0	36.0		180.0	172.0	66.0									
AUS23	198.0	178.0	90.0	36.0	54.0		180.0	172.0	84.0									
AUS33	198.0	178.0	108.0	54.0	54.0		180.0	172.0	102.0									