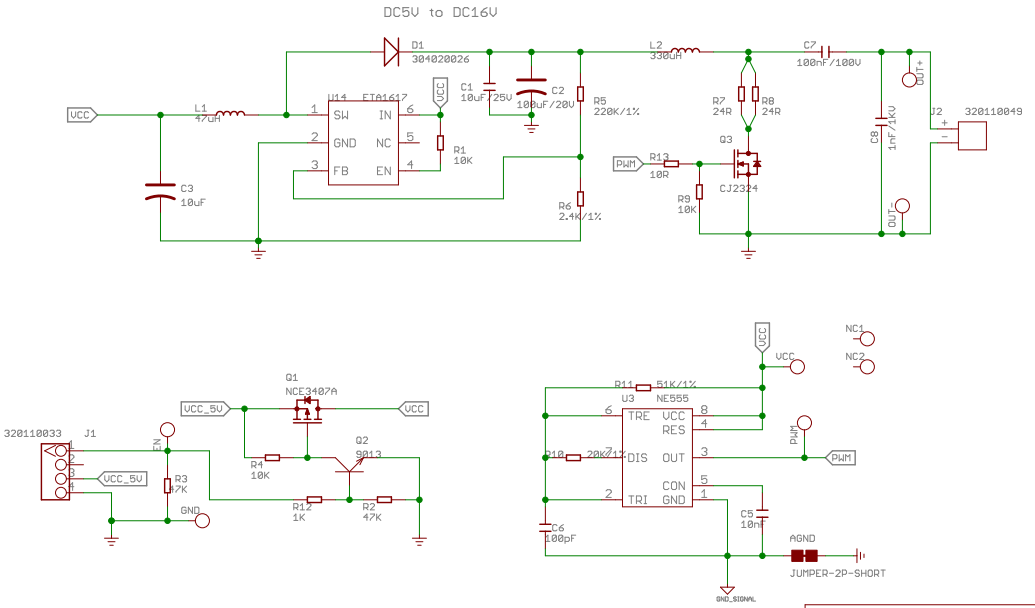

Seeed Studio

TITLE: Grove - Water Atomization v1.0

CC-BY-SA

Design: ZhanZhao.Fang	Check:	
Date: 2015/8/6 9:34:29	Vision:	Sheet: 1/2