REV.	DATE	ECR NO.	DESCRIPTION
A	04/04/03	–	UPDATE DRAWING FORMAT
B	09/21/08	–	ADD COUPLING NUT TO BOM

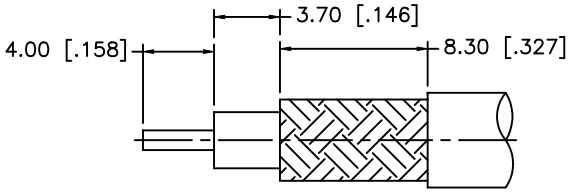

RECOMMENDED CABLE
STRIPPING DIMENSIONS

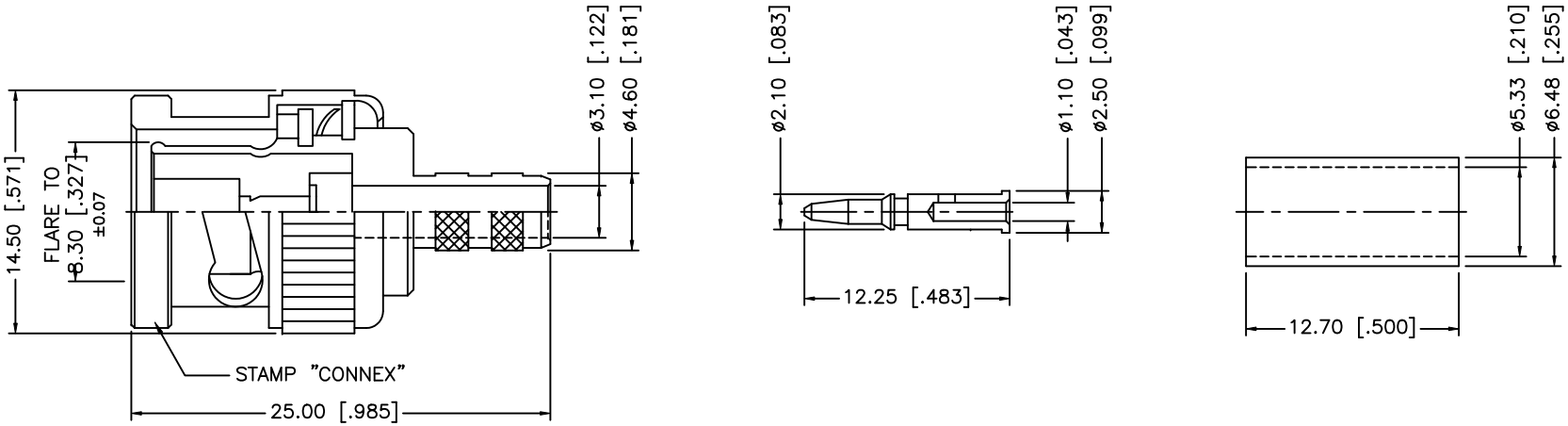

NOTES:

1. CRIMPED FERRULE HEX CRIMP SIZE .213" [5.41]
2. CRIMPED CONTACT PIN HEX CRIMP SIZE .068" [1.72]

	DESCRIPTION	MATERIAL	FINISH	QTY
8				
7				
6				
5	FERRULE	COPPER	NICKEL	1
4	CONTACT PIN	BRASS	GOLD	1
3	INSULATOR	DELRIN	NATURAL	1
2	COUPLING NUT	DIECAST	NICKEL	1
1	BODY	BRASS	NICKEL	1

UNLESS OTHERWISE SPECIFIED DIMENSIONS ARE IN MILLIMETERS. DIMENSIONS IN [ ] ARE IN INCHES AND FOR CUSTOMER REFERANCE ONLY.

UNLESS OTHERWISE SPECIFIED TOLERANCES FOR MILLIMETERS ARE:
0.5 – 8mm ± 0.20mm
8 – 30mm ± 0.40mm
30 – 120mm ± 0.50mm

UNLESS OTHERWISE SPECIFIED TOLERANCES FOR INCHES ARE:
.020 – .315 = ± 0.007"
.315 – 1.180 = ± 0.015"
1.180 – 4.724 = ± 0.020"

DO NOT SCALE DRAWING

APPROVALS		DATE
DRAWN	GRS	09/21/08
CHECKED		
ISSUED		
SHEET	1 OF 1	
CAD FILE	C:/112/112120.DWG	

Amphenol Connex

PART DESCRIPTION
BNC CRIMP PLUG
(FOR RG-58C/U CABLE)

PART NO. 112120

DWG. NO. 112120.DWG | REV. B | SIZE A | SCALE NA