[illegible]

[illegible]

[illegible]

[illegible]

[illegible]

- [illegible]
- [illegible]
- [illegible]
- [illegible]

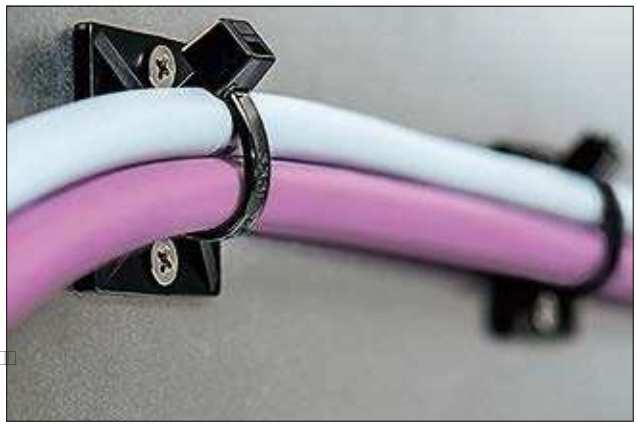

[illegible]

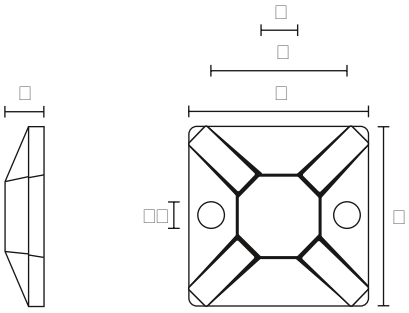

[illegible]

[illegible]	[illegible]	[illegible]	[illegible]	[illegible]	[illegible]	[illegible]	[illegible]	[illegible]	[illegible]	[illegible]
[illegible]	[illegible]	[illegible]	[illegible]	[illegible]	[illegible]	[illegible]	[illegible]	[illegible]	[illegible]	[illegible]
[illegible]	[illegible]	[illegible]	[illegible]	[illegible]	[illegible]	[illegible]	[illegible]	[illegible]	[illegible]	[illegible]
[illegible]	[illegible]	[illegible]	[illegible]	[illegible]	[illegible]	[illegible]	[illegible]	[illegible]	[illegible]	[illegible]

[illegible]

HellermannTyton

[illegible]

						RoHS
						RoHS
						HF LFH RoHS
						RoHS
						RoHS
						HF RoHS
						HF RoHS
						HF LFH RoHS
						RoHS
						HF RoHS
						HF RoHS
						HF RoHS
						HF RoHS
						HF RoHS
						RoHS
						RoHS
						RoHS

						RoHS
						HF RoHS
						HF LFH RoHS
						RoHS
						HF LFH RoHS
						HF LFH RoHS
						HF RoHS
						HF LFH RoHS
						HF RoHS
						HF RoHS
						RoHS
						HF RoHS
						RoHS
						HF RoHS

N = Mindestschlaufenhaltekraft für Kabelbinder (Newton)