HI0805P390R-10

PHYSICAL DIMENSIONS:

A	2.00 [.079]	± 0.20 [.008]
B	1.25 [.049]	± 0.20 [.008]
C	0.90 [.035]	± 0.20 [.008]
D	0.51 [.020]	± 0.25 [.010]

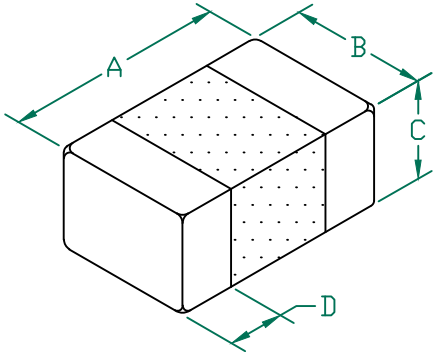

ELECTRICAL CHARACTERISTICS:

	Z @ 100MHz (Ω)	DCR (Ω)	Rated Current
Nominal	39.0		
Minimum	29.3		
Maximum	48.8	0.008	4000 mA

NOTES: UNLESS OTHERWISE SPECIFIED

1. TAPED AND REELED per CURRENT EIA SPECIFICATIONS 7" REELS, 4000 PCS/REEL, PAPER TAPER.
2. COMPONENTS SHOULD BE ADEQUATELY PREHEATED BEFORE SOLDERING.
3. TERMINATION FINISH IS 100% TIN.
4. OPERATEING TEMP. RANGE: −40°C~+125°C (INCLUDING SELF−HEATING)

Z vs FREQUENCY
IMPEDANCE UNDER DC BIAS

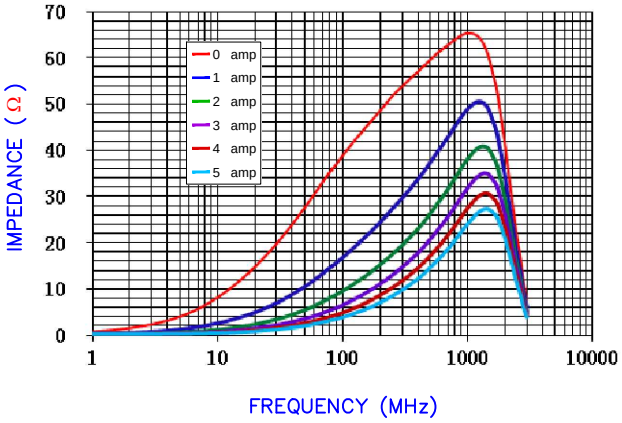

|Z| , R, AND X vs. FREQUENCY

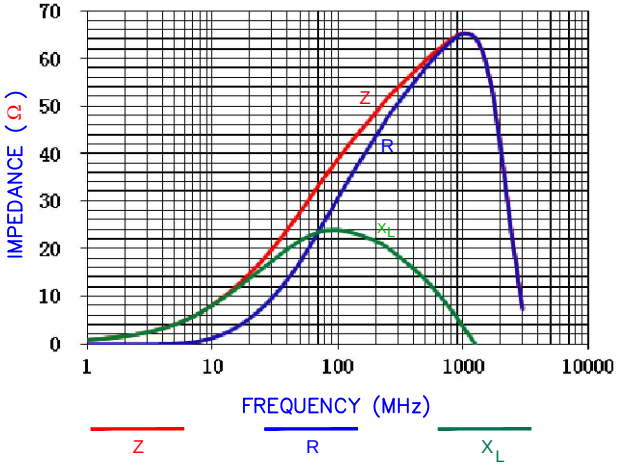

AGILENT E4991A RF Impedance/Material Analyzer
AGILENT 16194A.

LAND PATTERNS FOR REFLOW SOLDERING

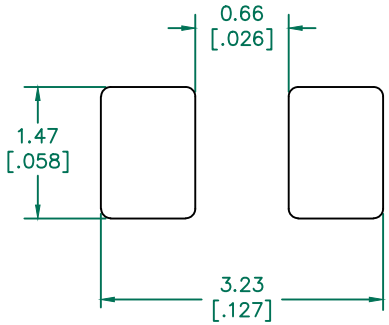

(For wave soldering, add 0.763 [.030] to this dimension.)

RECOMMENDED SOLDERING CONDITIONS

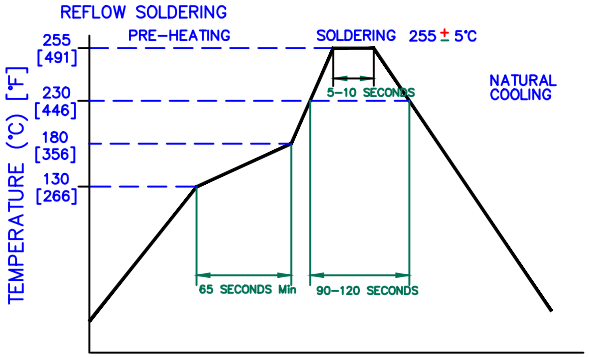

RoHS

DIMENSIONS ARE IN mm [INCHES].

REV	DESCRIPTION	DATE	INT
A	ORIGINAL DRAFT	09/05/13	QU

This print is the property of Laird Tech. and is loaned in confidence subject to return upon request and with the understanding that no copies shall be made without the written consent of Laird Tech. All rights to design or invention are reserved.

Laird

PROJECT/PART NUMBER:	REV	PART TYPE:	DRAWN BY:
HI0805P390R−10	A	CO−FIRE	QU

DATE:	SCALE:	SHEET:
09/05/13	NTS	1 of 1

CAD # HI0805P390R−10−A
TOOL #