REV.	DATE	DESCRIPTION
A	06/30/00	MODIFY BARREL O.D. DIMENSION
B	05/22/05	UPDATE DRAWING FORMAT/ MODIFY PLATING SPEC

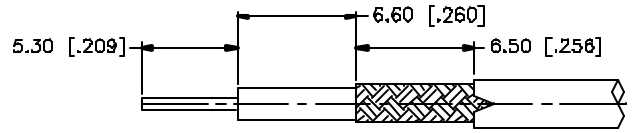

RECOMMENDED CABLE STRIPPING DIMENSIONS

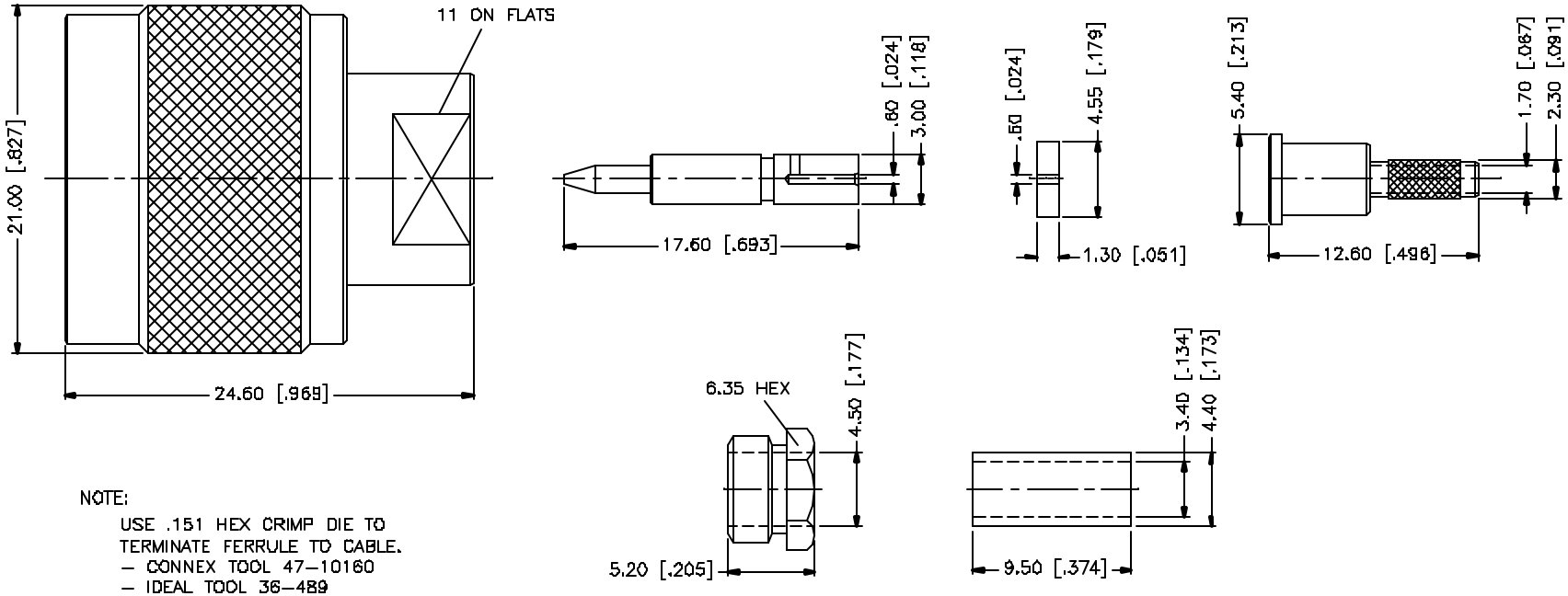

NOTE:

USE .151 HEX CRIMP DIE TO TERMINATE FERRULE TO CABLE.
- CONNEX TOOL 47-10160
- IDEAL TOOL 36-489

	DESCRIPTION	MATERIAL	FINISH	QTY
8				
7				
6	FERRULE	BRASS	NEXCOTE	1
5	HEX NUT	BRASS	NEXCOTE	1
4	BARREL	BRASS	NEXCOTE	1
3	CONTACT PIN	BRASS	GOLD	1
2	INSULATOR	TEFLON	NATURAL	1
1	BODY	BRASS	NEXCOTE	1

UNLESS OTHERWISE SPECIFIED DIMENSIONS ARE IN MILLIMETERS. DIMENSIONS IN [ ] ARE IN INCHES AND FOR CUSTOMER REFERENCE ONLY.

UNLESS OTHERWISE SPECIFIED TOLERANCES FOR MILLIMETERS ARE:
0.5 – 6mm ± 0.20mm
6 – 30mm ± 0.40mm
30 – 120mm ± 0.60mm

UNLESS OTHERWISE SPECIFIED TOLERANCES FOR INCHES ARE:
.020 – .315 = ± 0.007"
.315 – 1.180 = ± 0.015"
1.180 – 4.724 = ± 0.020"

DO NOT SCALE DRAWING

APPROVALS		DATE
DRAWN	G.R.S.	05/22/05
CHECKED		
ISSUED		
SHEET	1 OF 1	

CAD FILE C:/172/172171.DWG

Amphenol Connex

PART DESCRIPTION
N CRIMP PLUG
(FOR RG-316/U DOUBLE BRAID CABLE)

PART NO. 172171

DWG. NO. 172171.DWG | REV. B | SIZE A | SCALE NA