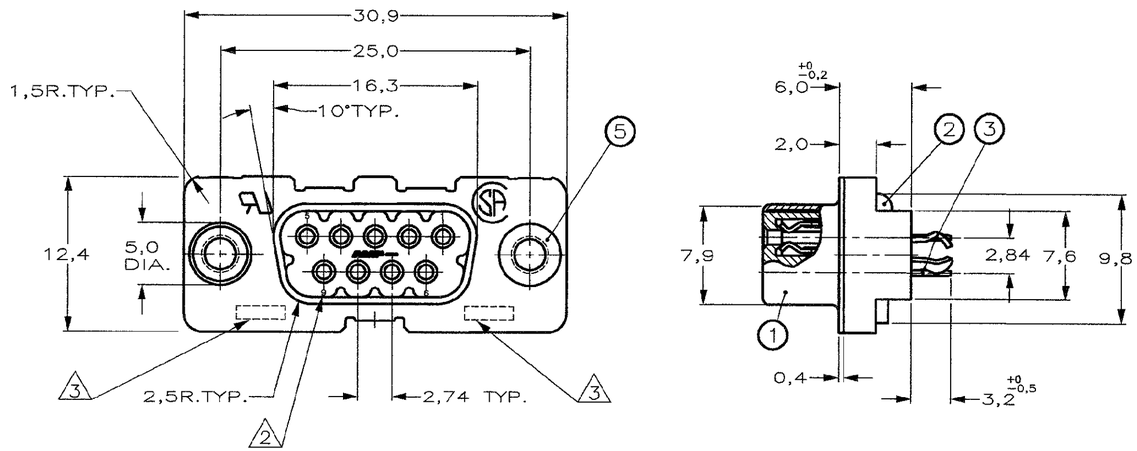

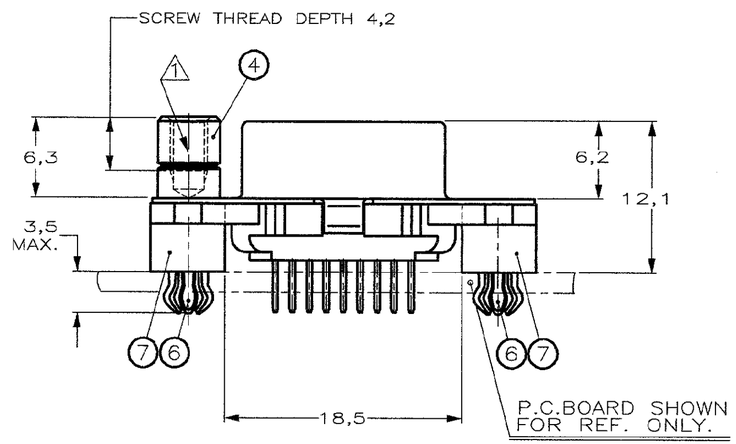

RECOMMENDED P.C. BOARD HOLE-LAYOUT

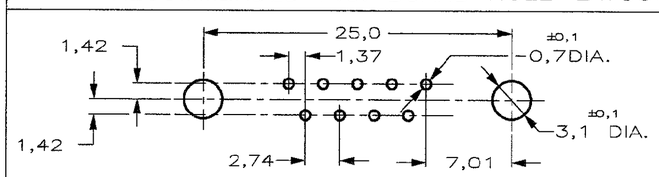

DO NOT SCALE — DIMENSIONS IN mm — METRIC — THIRD ANGLE PROJECTION

ACCESSORIES PREFIX "Z"

ITEM NR.	DESCRIPTION OF ACCESSORY	1	2	3	4	5	6	7	8	9
5	BUSHING WITH THROUGHHOLE 3,1 DIA.					2				
5	BUSHING WITH THREAD 4-40 UNC		2				2			
5	BUSHING WITH THREAD M3			2				2		
4	FEMALE SCREWLOCK WITH THREAD 4-40 UNC				2				2	
4	FEMALE SCREWLOCK WITH THREAD M3					2				2
6	BOARDLOCK		2	2	2	2				

HOW TO ORDER:

9 POS.-----> Z-338313-Y

PREFIX FOR ACCESSORIES

BASIC PARTNR.

SUFFIX FOR PLATING

1	2	3	4	5	6	7	8	9
1-XXXXX-Y	2-XXXXX-Y	3-XXXXX-Y	4-XXXXX-Y	5-XXXXX-Y	6-XXXXX-Y	7-XXXXX-Y	8-XXXXX-Y	9-XXXXX-Y

PLATING SUFFIX "Y"

GOLD OVER NICKEL AS PER PERFORMANCE LEVEL 2 (DIN 41652)
SOLDER-PART :2,5µm BRIGHT SnPb. } -Y = -2

1. GROOVE INDICATES VERSION WITH 4-40 UNC INNER THREAD; WITHOUT GROOVE INDICATES VERSION WITH M3 INNER THREAD.
2. CAVITY IDENTIFICATION AT FRONT SIDE ONLY.
3. PARTNUMBER AND DATE CODE.
4. WHEN BOARDLOCKS ARE USED, CONNECTOR CAN BE USED FOR PCB THICKNESS OF 1,6 mm ONLY.

ITEM NRS./MATERIAL :

(1) SHELL	: BRIGHT TINPLATED STEEL
(2) HOUSING	: GLASSFILLED POLYESTER, COLOR : BLACK
(3) CONTACTS	: PHOSPHORBRONZE (PLATING : SEE TABLE ABOVE)
(4) FEMALE SCREWLOCK	: TINPLATED STEEL (INNER THREAD 4-40 UNC OR M3)
(5) BUSHING	: TINPLATED STEEL (INNER THREAD 4-40 UNC OR M3 OR 3,1 DIA. THROUGHHOLE)
(6) BOARDLOCK	: TINPLATED PHOSPHORBRONZE
(7) STAND OFF	: ULTRAMID V0 COLOR : BLACK

LTR.	REVISION RECORD	DR.	CHK.	DATE
-	-	-	-	-
D	EH-1417-99	P.W.	W.C.	19-02-00
C	EH-0033-99	D.K.	W.S	21 JAN 99
B	EH-1385-98	W.S	W.S	04-09-98
A	EH-1390-97	JvL	C.S.	16-09-97
0	EH-0670-97	JvL	C.S.	01-07-97

CUSTOMER DRAWING — FOR REFERENCE ONLY WILL NOT BE UPDATED

© COPYRIGHT 19 - BY AMP-HOLLAND B.V.
ALL INTERNATIONAL RIGHTS RESERVED.AMP PRODUCTS MAY BE COVERED BY U.S. AND FOREIGN AND/OR PATENTS PENDING.

THIS DRAWING IS UNPUBLISHED
~~RELEASED FOR PUBLICATION .19 -~~

AMP — AMP-HOLLAND B.V. 's-Hertogenbosch, The Netherlands.

NAME: HD-20 SIZE 1 VERTICAL+ RECEPTACLE HEADER; WITH SOLDER CONTACTS

DR.: J.v.LIEMPT	CHK.: C.SOUISA	APP.: E.LEUTENS	DWG.No. C-338313	REV.LTR. D	SHEET 1 OF 1	A2
DATE: 01-07-97	DATE: 09-09-97	DATE: 09-09-97				

R6-129 (REV.04-91)