ELECTRONICS, INC.
44 FARRAND STREET
BLOOMFIELD, NJ 07003
(973) 748–5089
http://www.nteinc.com

# NTE7440
# Integrated Circuit
# TTL – Dual 4–Input Positive NAND Buffer

**Description:**
The NTE7440 contains two independent 4–Input NAND buffer gates in a 14–Lead plastic DIP type package.

**Absolute Maximum Ratings:** (Note 1)
Supply Voltage, $V_{CC}$ . . . . . 7V
DC Input Voltage, $V_{IN}$ . . . . . 5.5V
Operating Temperature Range, $T_A$ . . . . . 0°C to +70°C
Storage Temperature Range, $T_{stg}$ . . . . . –65°C to +150°C

Note 1. Unless otherwise specified, all voltages are referenced to GND.

**Recommended Operating Conditions:**

| Parameter | Symbol | Min | Typ | Max | Unit |
|---|---|---|---|---|---|
| Supply Voltage | $V_{CC}$ | 4.75 | 5.0 | 5.25 | V |
| High–Level Input Voltage | $V_{IH}$ | 2 | – | – | V |
| Low–Level Input Voltage | $V_{IL}$ | – | – | 0.8 | V |
| High–Level Output Current | $I_{OH}$ | – | – | –1.2 | mA |
| Low–Level Output Current | $I_{OL}$ | – | – | 48 | mA |
| Operating Temperature Range | $T_A$ | 0 | – | +70 | °C |

**Electrical Characteristics:** (Note 2, Note 3)

| Parameter | Symbol | Test Conditions | Min | Typ | Max | Unit |
|---|---|---|---|---|---|---|
| Input Clamp Voltage | $V_{IK}$ | $V_{CC}$ = MIN, $I_I$ = –12mA | – | – | –1.5 | V |
| High Level Output Voltage | $V_{OH}$ | $V_{CC}$ = MIN, $V_{IL}$ = 0.8V, $I_{OH}$ = –1.2mA | 2.4 | 3.4 | – | V |
| Low Level Output Voltage | $V_{OL}$ | $V_{CC}$ = MIN, $V_{IH}$ = 2V, $I_{OL}$ = 48mA | – | 0.2 | 0.4 | V |
| Input Current | $I_I$ | $V_{CC}$ = MAX, $V_I$ = 5.5V | – | – | 1 | mA |

Note 2. .For conditions shown as MIN or MAX, use the appropriate value specified under “Recommended Operation Conditions”.
Note 3. All typical values are at $V_{CC}$ = 5V, $T_A$ = +25°C.

**Electrical Characteristics (Cont'd):** (Note 2, Note 3)

| Parameter | Symbol | Test Conditions | Min | Typ | Max | Unit |
|---|---|---|---|---|---|---|
| High Level Input Current | $I_{IH}$ | $V_{CC}$ = MAX, $V_I$ = 2.4V | – | – | 40 | μA |
| Low Level Input Current | $I_{IL}$ | $V_{CC}$ = MAX, $V_I$ = 0.4V | – | – | –1.6 | mA |
| Short–Circuit Output Current | $I_{OS}$ | $V_{CC}$ = MAX, Note 4 | –18 | – | –70 | mA |
| High Level Supply Current | $I_{CCH}$ | $V_{CC}$ = MAX, $V_I$ = 0 | – | 4 | 8 | mA |
| Low Level Supply Current | $I_{CCL}$ | $V_{CC}$ = MAX, $V_I$ = 4.5V | – | 17 | 27 | mA |

Note 2. .For conditions shown as MIN or MAX, use the appropriate value specified under "Recommended Operation Conditions".

Note 3. All typical values are at $V_{CC}$ = 5V, $T_A$ = +25°C.

Note 4. Not more than one output should be shorted at a time, and the duration of the short–circuit should not exceed 100 milliseconds.

**Switching Characteristics:** ($V_{CC}$ = 5V, $T_A$ = +25°C unless otherwise specified)

| Parameter | Symbol | Test Conditions | Min | Typ | Max | Unit |
|---|---|---|---|---|---|---|
| Propagation Delay Time From Any Input to Y Output) | $t_{PLH}$ | $R_L$ = 133Ω, $C_L$ = 15pF | – | 13 | 22 | ns |
| | $t_{PHL}$ | | – | 8 | 15 | ns |

**Function Table (Each Gate):**

| Inputs | | | | Output |
|---|---|---|---|---|
| A | B | C | D | Y |
| H | H | H | H | L |
| L | X | X | X | H |
| X | L | X | X | H |
| X | X | L | X | H |
| X | X | X | L | H |

H = HIGH Voltage Level
L = LOW Voltage Level
X = Don't Care

**Logic Diagram**

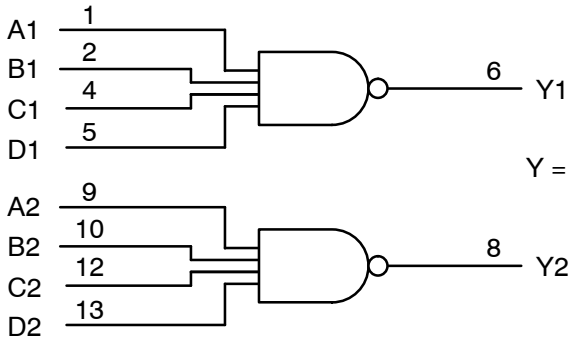


$Y = \overline{A \bullet B \bullet C \bullet D}$ or $Y = \overline{A} + \overline{B} + \overline{C} + \overline{D}$

Pin14 = $V_{CC}$
Pin7 = GND

**Pin Connection Diagram**