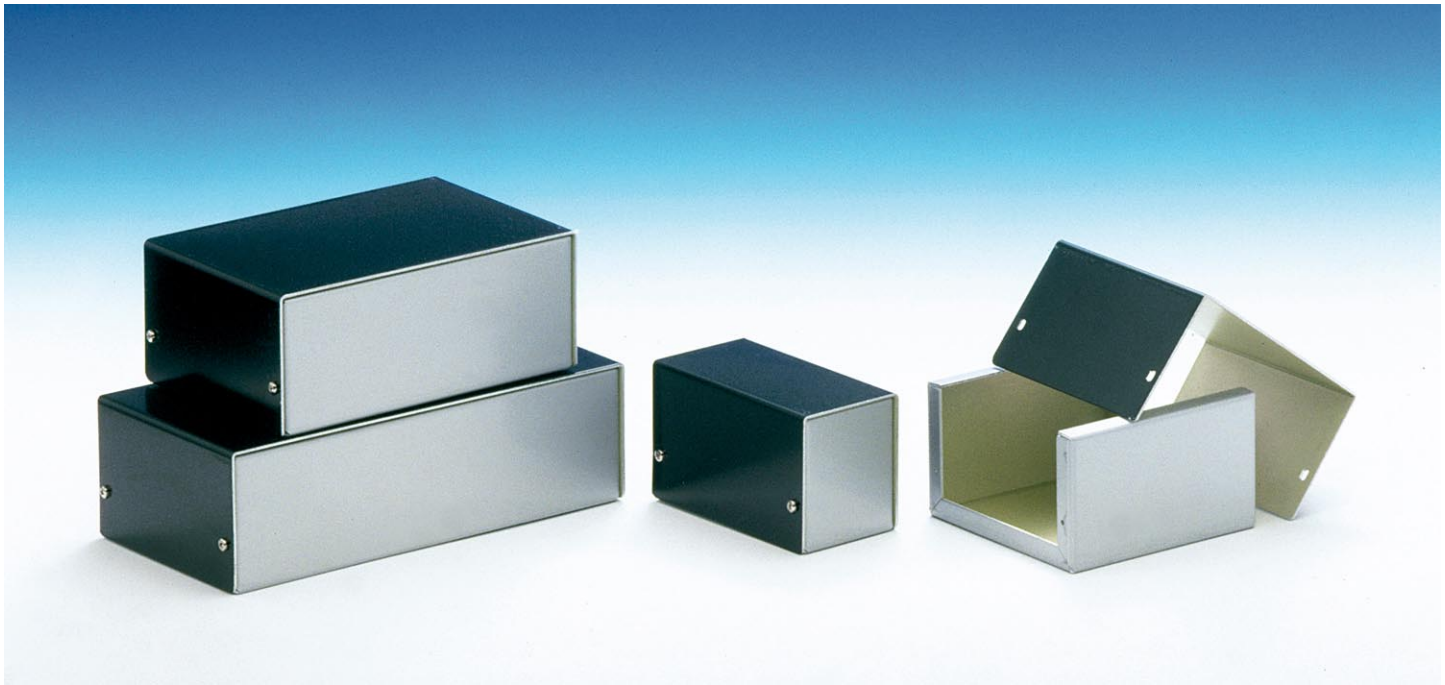

DESIGN
Aluminium enclosure with silver metalised base and black cover.
Simple and speedy to assemble, with four screws to put in place.

OPTIONS
Drilling
Punching
Silk screening

MATERIALS and COLOURS
ALUMINIUM

Black	RAL 9004
Silver	RAL 9006

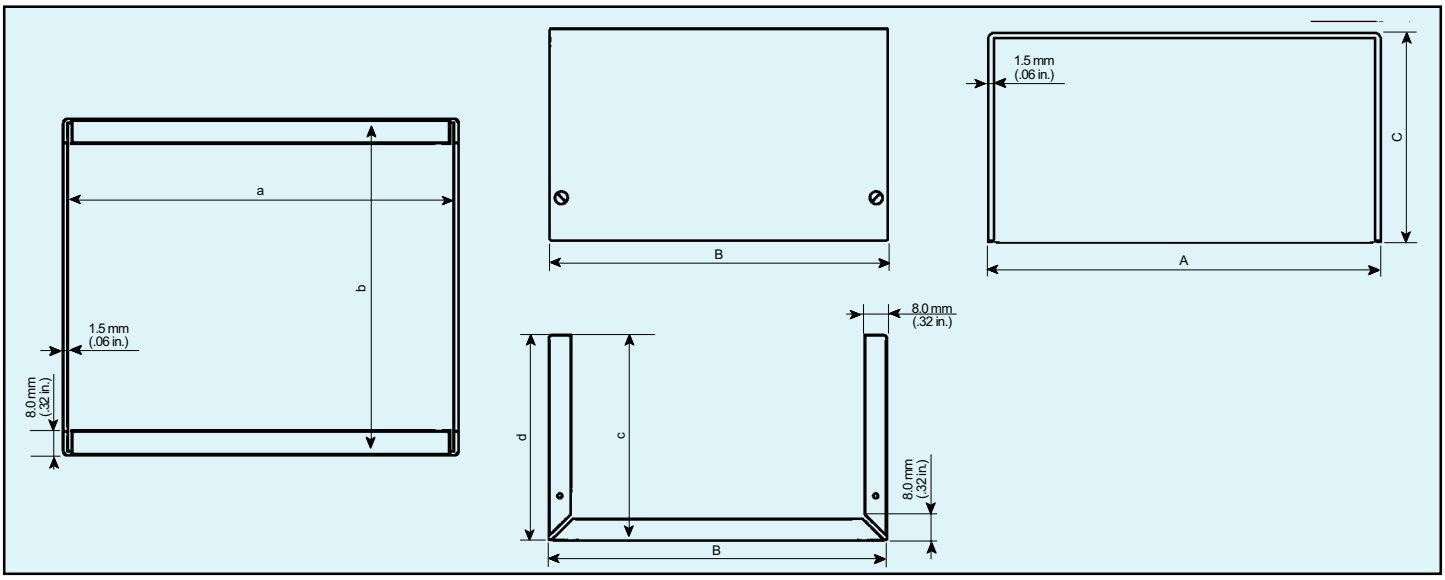

MODEL	DIMENSIONS mm																	
	EXTERNAL						INTERNAL											
	A	B	C	D	E	F	a	b	c	d	e	f	g	h	i	j	k	l
331	53.0	100.0	63.0				47.0	97.0	59.5	61.0								
332	103.0	100.0	63.0				97.0	97.0	59.5	61.0								
333	153.0	100.0	63.0				147.0	97.0	59.5	61.0								
334	203.0	100.0	63.0				197.0	97.0	59.5	61.0								
335	237.0	100.0	63.0				231.0	97.0	59.5	61.0								

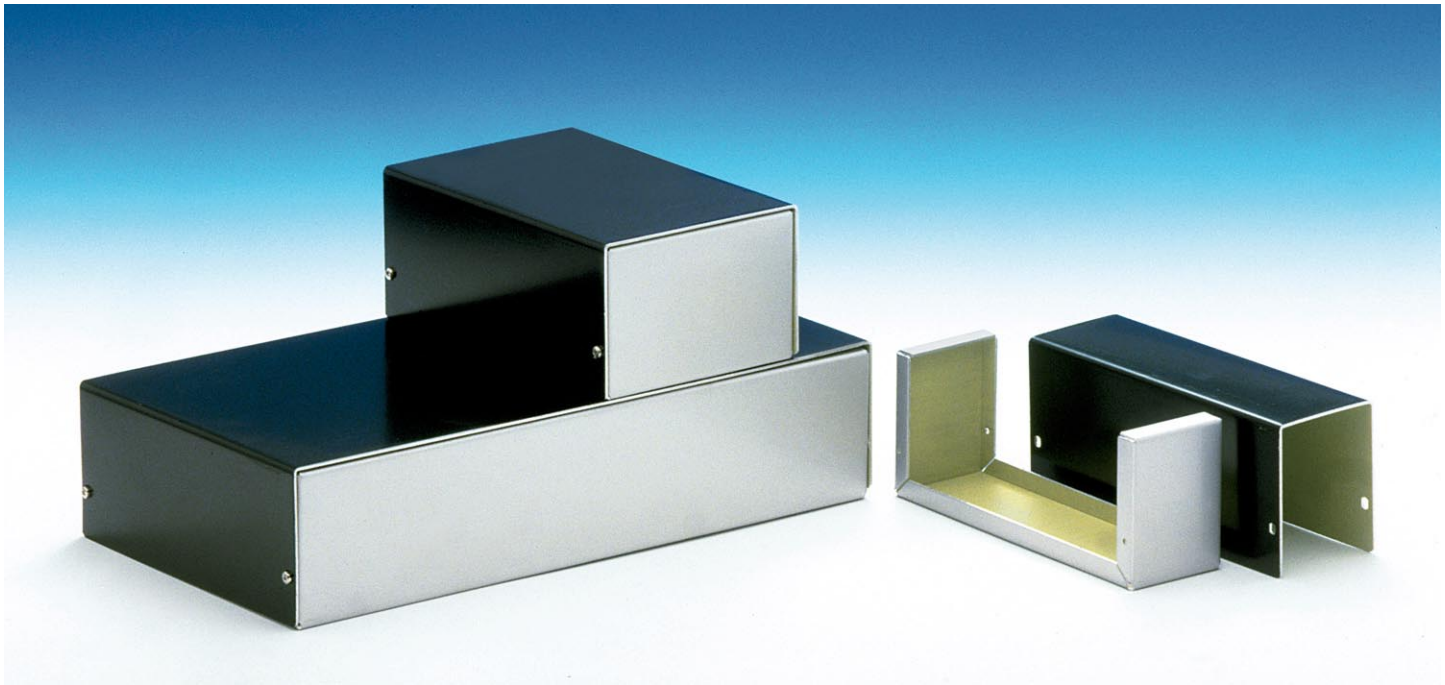

DESIGN
Aluminium enclosure with silver metalised base and black cover.
Simple and speedy to assemble, with four screws to put in place.

OPTIONS
Drilling
Punching
Silk screening

MATERIALS and COLOURS
ALUMINIUM

Black	RAL 9004
Silver	RAL 9006

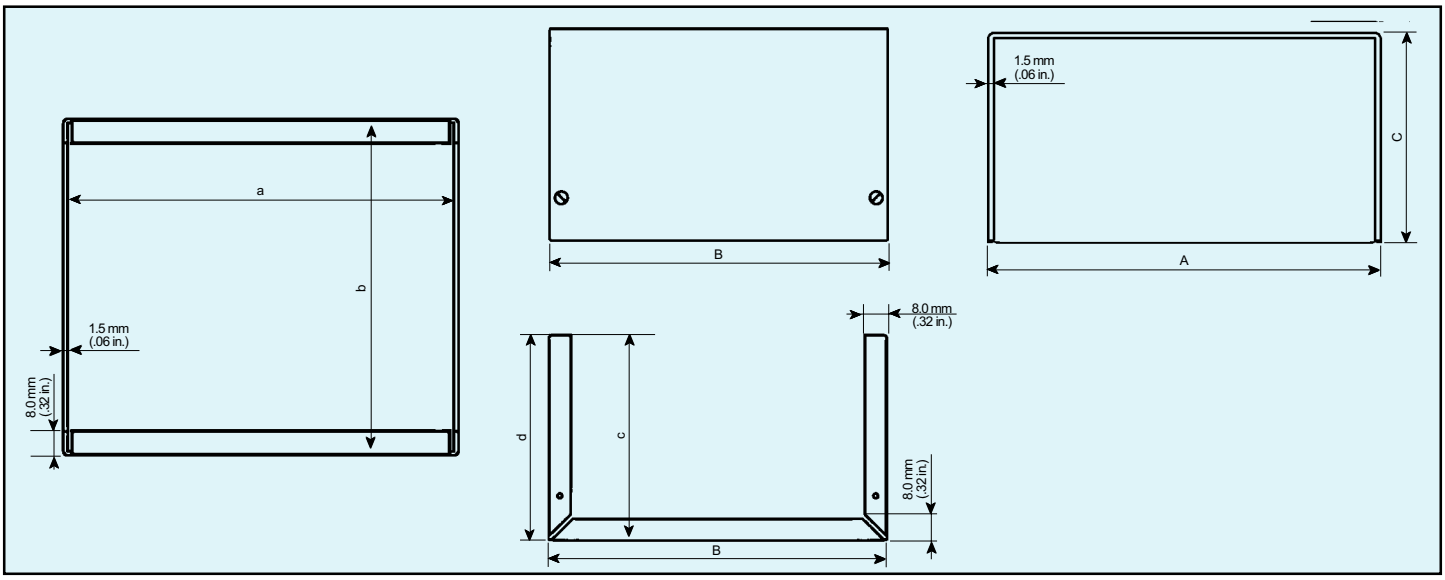

MODEL	DIMENSIONS mm																	
	EXTERNAL						INTERNAL											
	A	B	C	D	E	F	a	b	c	d	e	f	g	h	i	j	k	l
381	53.0	160.0	69.5				47.0	157.0	66.0	67.5								
382	103.0	160.0	69.5				97.0	157.0	66.0	67.5								
383	153.0	160.0	69.5				147.0	157.0	66.0	67.5								
384	203.0	160.0	69.5				197.0	157.0	66.0	67.5								
385	253.0	160.0	69.5				247.0	157.0	66.0	67.5								
386	303.0	160.0	69.5				297.0	157.0	66.0	67.5								

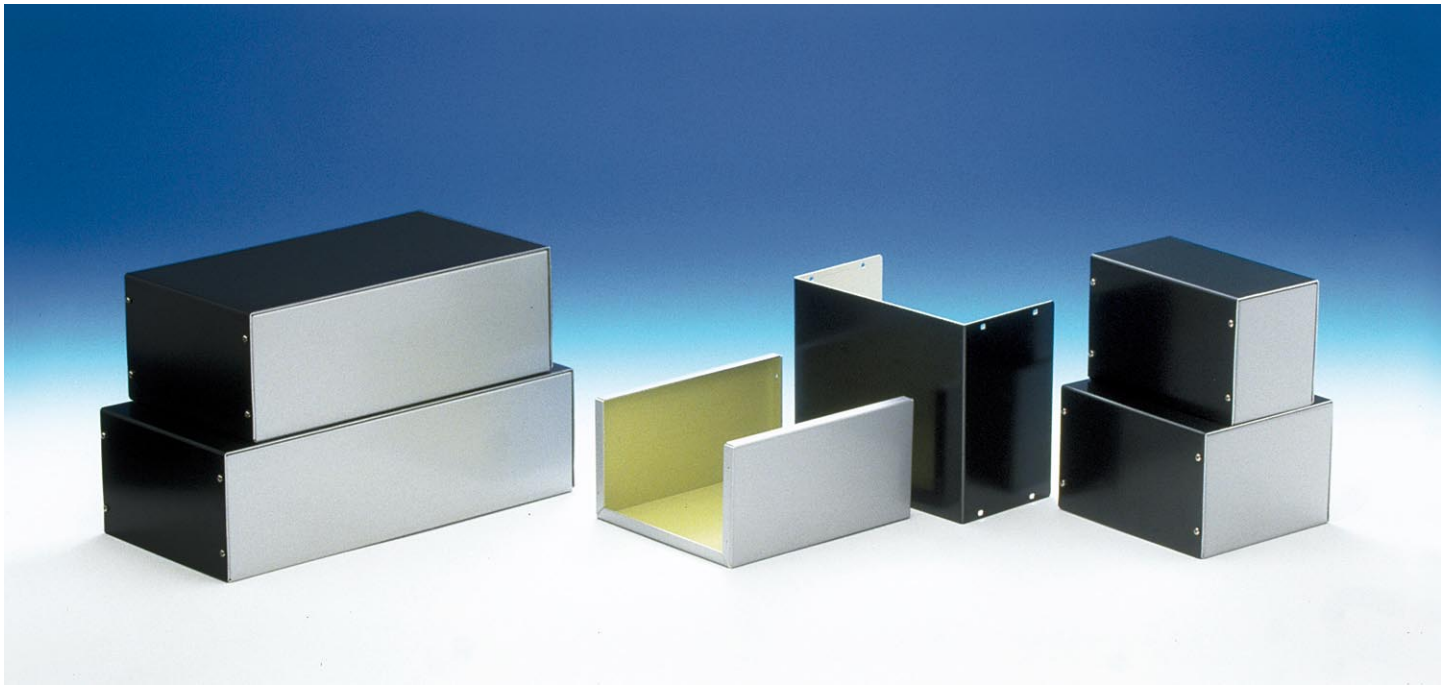

DESIGN
Aluminium enclosure with silver metalised base and black cover.
Simple and speedy to assemble, with eight screws to put in place.

OPTIONS
Drilling
Punching
Silk screening

MATERIALS and COLOURS
ALUMINIUM

Black	RAL 9004
Silver	RAL 9006

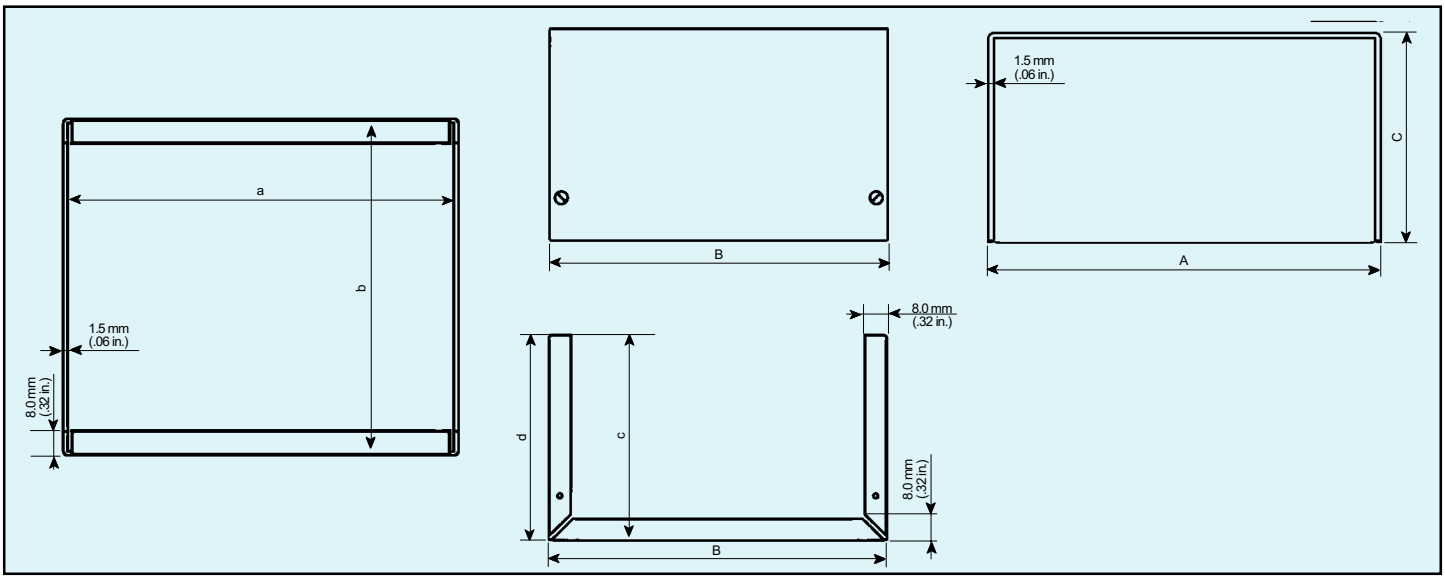

MODEL	DIMENSIONS mm																	
	EXTERNAL						INTERNAL											
	A	B	C	D	E	F	a	b	c	d	e	f	g	h	i	j	k	l
421	87.0	160.0	100.0				81.0	157.0	96.5	98.0								
422	137.0	160.0	100.0				131.0	157.0	96.5	98.0								
423	187.0	160.0	100.0				181.0	157.0	96.5	98.0								
424	237.0	160.0	100.0				231.0	157.0	96.5	98.0								
425	287.0	160.0	100.0				281.0	157.0	96.5	98.0								
426	337.0	160.0	100.0				331.0	157.0	96.5	98.0								
427	387.0	160.0	100.0				381.0	157.0	96.5	98.0								