OekoUniversal Typ 500/450
OekoUniversal type 500/450
OekoUniversal type 500/450
OekoUniversal modelo 500/450

Art.-Nr.
200.1671.xx

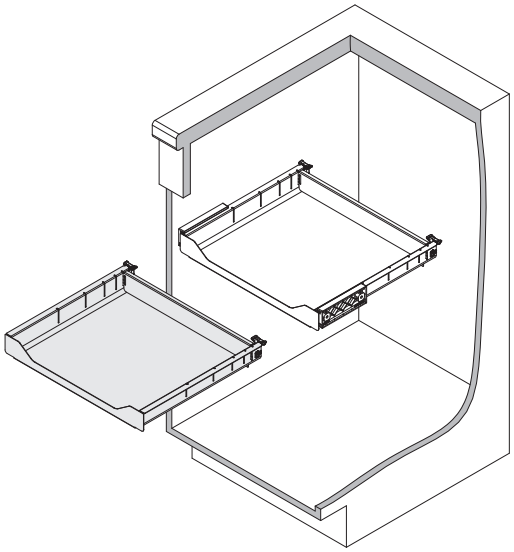

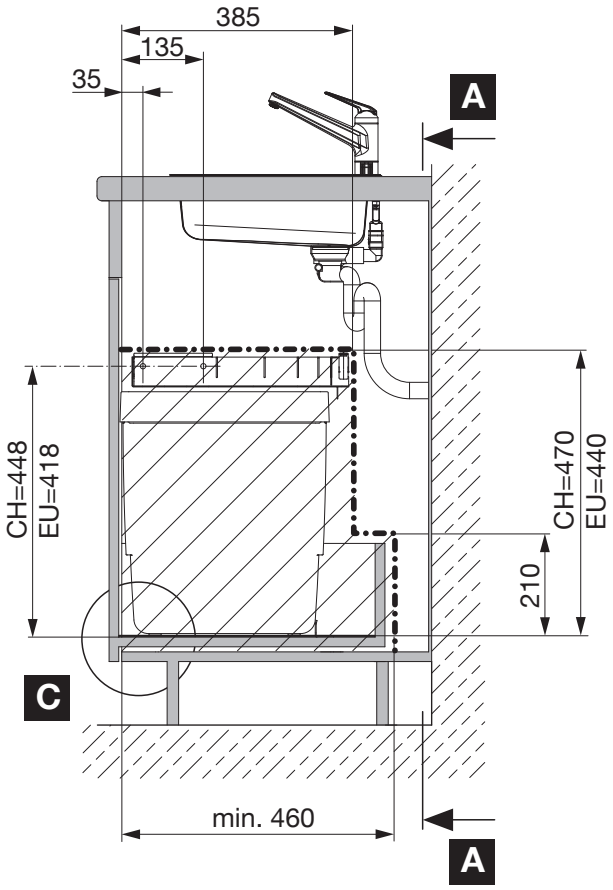

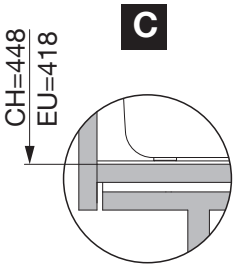

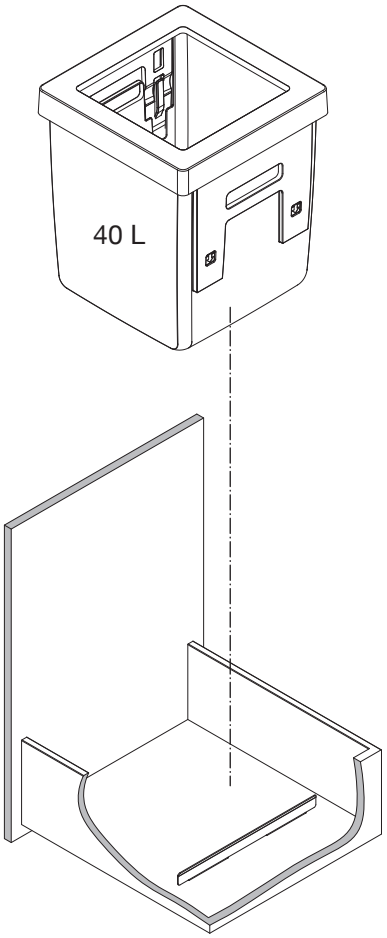

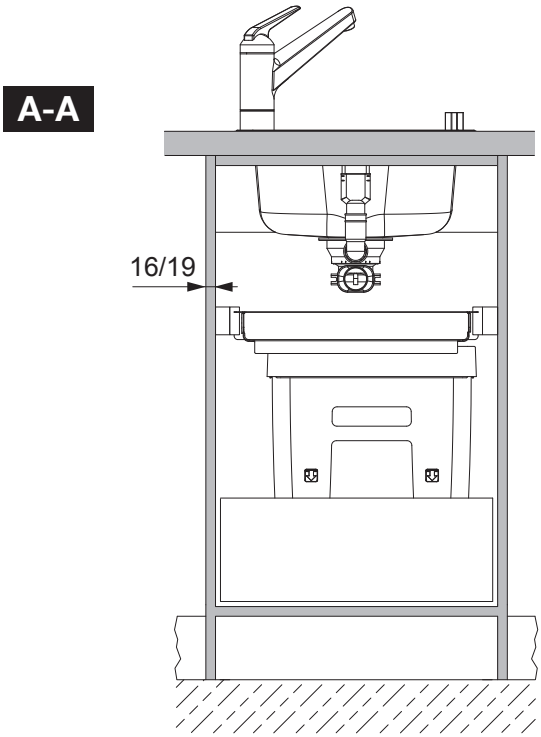

peka
T +41 41 919 94 00
F +41 41 919 94 10
www.peka-system.ch
peka@peka-system.ch