Air reservoirs

Air reservoirs CRVZS

Technical data

Function
CRVZS-0.1/0.4/0.75/2

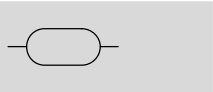

CRVZS-5/10/20
with condensate drain

Temperature range
−10 … +100 °C

Operating pressure
−0.95 … 16 bar

- The reservoirs can be used to compensate pressure fluctuations, and act as accumulators in the event of sudden air consumption
- They can also be used to provide large quantities of compressed air for supplying fast pulsing drives
- Time delays for pressure build-up can be achieved in combination with flow control valves

Technical data							
Type	CRVZS-0.1	CRVZS-0.4	CRVZS-0.75	CRVZS-2	CRVZS-5	CRVZS-10	CRVZS-20
Pneumatic connection	G⅛	G¼		G½	G1		
Condensate drain connection	–				G⅜		
Type of mounting	Retaining clips			Via through-holes			
Installation position	Any				Condensate drain downwards		
Volume [l]	0.1 ±20%	0.4 ±20%	0.75 ±20%	2 ±10%	5 ±10%	10 ±10%	20 ±10%
Weight [g]	226	543	736	1,681	3,581	6,459	10,208

Note: This product conforms to ISO 1179-1 and to ISO 228-1

Operating and environmental conditions							
Type	CRVZS-0.1	CRVZS-0.4	CRVZS-0.75	CRVZS-2	CRVZS-5	CRVZS-10	CRVZS-20
Operating pressure [bar]	−0.95 … +16						
Operating medium	Compressed air in accordance with ISO 8573-1:2010 [−:−:−]						
	Nitrogen						
Ambient temperature [°C]	−10 … +100 (observe operating range of tubing and pipe)						
Temperature of medium [°C]	−10 … +100 (observe operating range of tubing and pipe)						
Corrosion resistance class CRC[1]	3						
Conforms to standard	AD 2000						
CE symbol (see declaration of conformity)[2]	–				In accordance with EU Pressure Equipment Directive		
Food-safe[2]	See supplementary material information						
Approval[2]	German Technical Control Board (TÜV)						
	CRN						
Certificate issuing department	TSSACRN0H17477.5C				CRN0H15669.5C		

1) Corrosion resistance class CRC 3 to Festo standard FN 940070
High corrosion stress. Outdoor exposure under moderate corrosive conditions. External visible parts with primarily functional requirements for the surface and which are in direct contact with a normal industrial environment.
2) Additional information www.festo.com/sp ➔ Certificates.

Air reservoirs CRVZS

Technical data

Materials							
Type	CRVZS-0.1	CRVZS-0.4	CRVZS-0.75	CRVZS-2	CRVZS-5	CRVZS-10	CRVZS-20
Air reservoir	High-alloy stainless steel						
Retaining clips	High-alloy stainless steel			–			
Note on materials	Free of copper and PTFE						
	Conforms to RoHS						

Dimensions Download CAD data ➔ **www.festo.com**

CRVZS-0.1/CRVZS-0.4/CRVZS-0.75

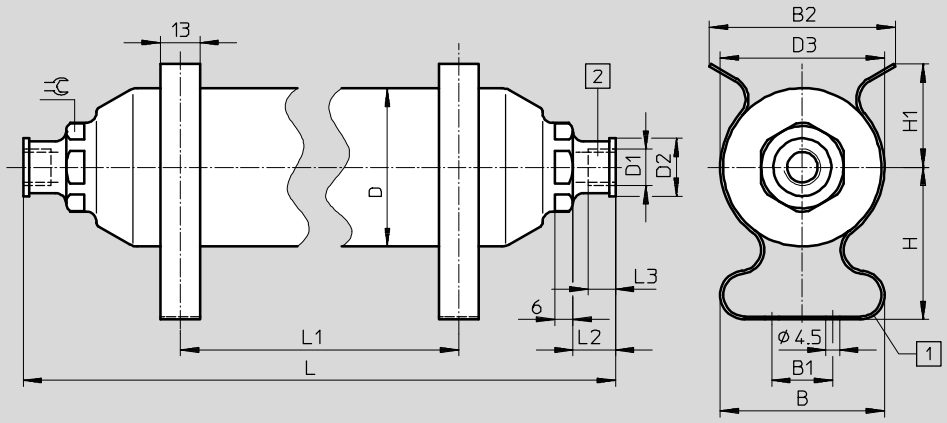

1 Retaining clips
2 For max. tightening torque ➔ table below

Type	B ±2	B1	B2 ±2	D ∅	D1	D2 ∅	D3 ∅	H ±1	H1 ±1
CRVZS-0.1	51	14	–	40	G⅛	15	42	43	28
CRVZS-0.4	54	14	–	52	G¼	19	54	50	34
CRVZS-0.75	60	20	79	70	G¼	19	72	61	34

Type	L ±1	L1 min.	L1 max.	L2	L3	⇌	Max. tightening torque for connecting thread [Nm]
CRVZS-0.1	132	13	50	10	6	19	15
CRVZS-0.4	240	13	150	14	9	27	23
CRVZS-0.75	248	13	140	14	9	27	23

Note: This product conforms to ISO 1179-1 and to ISO 228-1

Dimensions Download CAD data ➔ **www.festo.com**

CRVZS-2

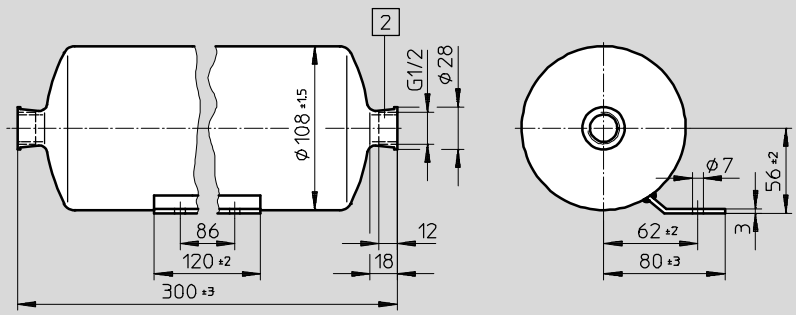

2 Max. tightening torque for connecting thread 55 Nm

Note: This product conforms to ISO 1179-1 and to ISO 228-1

Dimensions Download CAD data ➔ **www.festo.com**

CRVZS-5

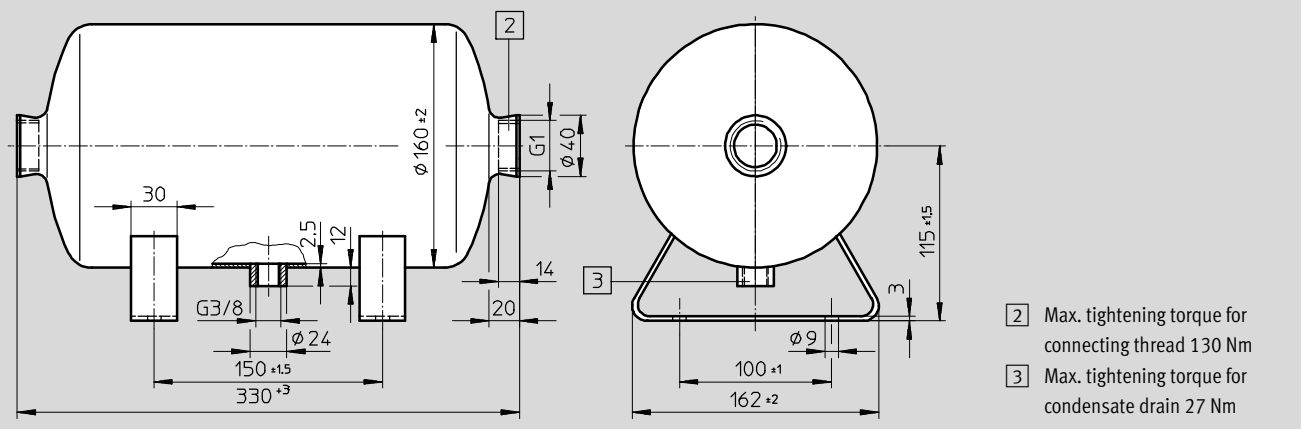

Note: This product conforms to ISO 1179-1 and to ISO 228-1

Dimensions Download CAD data ➔ **www.festo.com**

CRVZS-10/CRVZS-20

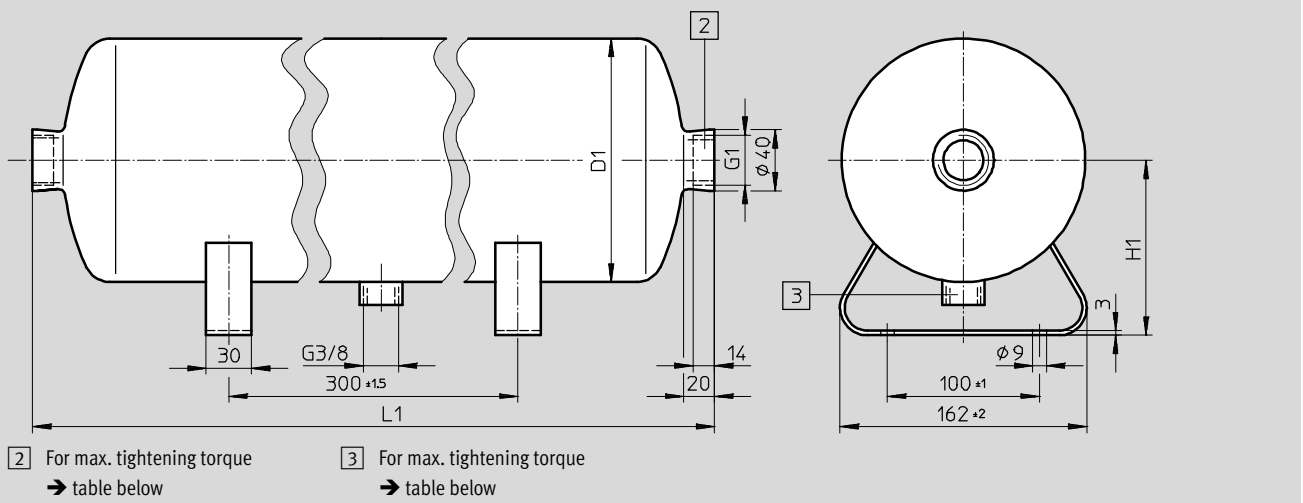

Type	D1	H1	L1	Max. tightening torque	
	±2	±1.5	±3	Connecting thread [Nm]	Condensate drain [Nm]
CRVZS-10	160	115	558	130	27
CRVZS-20	194	136	740	130	27

Note: This product conforms to ISO 1179-1 and to ISO 228-1

Ordering data

Volume [l]	Part No.	Type		Volume [l]	Part No.	Type
0.1 ±20%	**160233**	**CRVZS-0.1**		5 ±10%	**192159**	**CRVZS-5**
0.4 ±20%	**160234**	**CRVZS-0.4**		10 ±10%	**160237**	**CRVZS-10**
0.75 ±20%	**160235**	**CRVZS-0.75**		20 ±10%	**534845**	**CRVZS-20**
2 ±10%	**160236**	**CRVZS-2**				

Air reservoirs VZS

Technical data

Function
with condensate drain

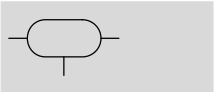

Temperature range
−10 ... +100 °C

Operating pressure
−0.95 ... 16 bar

- The reservoirs can be used to compensate pressure fluctuations, and act as accumulators in the event of sudden air consumption
- They can also be used to provide large quantities of compressed air for supplying fast pulsing drives
- Time delays for pressure build-up can be achieved in combination with flow control valves

Technical data		
Type		VZS-20-B
Pneumatic connection		G1
Condensate drain connection		G3/8
Type of mounting		Via through-holes
Installation position		Condensate drain downwards
Volume	[l]	20 ±10%
Weight	[g]	8,600

Note: This product conforms to ISO 1179-1 and to ISO 228-1

Operating and environmental conditions		
Type		VZS-20-B
Operating pressure	[bar]	−0.95 ... +16
Operating medium		Compressed air in accordance with ISO 8573-1:2010 [−:−:−]
		Nitrogen
Ambient temperature	[°C]	−10 ... +100 (observe operating range of tubing and pipe)
Temperature of medium	[°C]	−10 ... +100 (observe operating range of tubing and pipe)
Corrosion resistance class	CRC[1)]	4
Conforms to		EN 286-1
CE symbol (see declaration of conformity)		In accordance with EU Simple Pressure Vessel Directive

1) CRC4: Corrosion resistance class to Festo standard 940 070
Components with very heavy corrosion exposure. Components in contact with aggressive media, e.g. in food or chemical industries. These applications must, if necessary, be verified by special tests with the media concerned.

Materials	
Air reservoir	Painted steel
Note on materials	Free of copper and PTFE

Dimensions Download CAD data ➔ **www.festo.com**

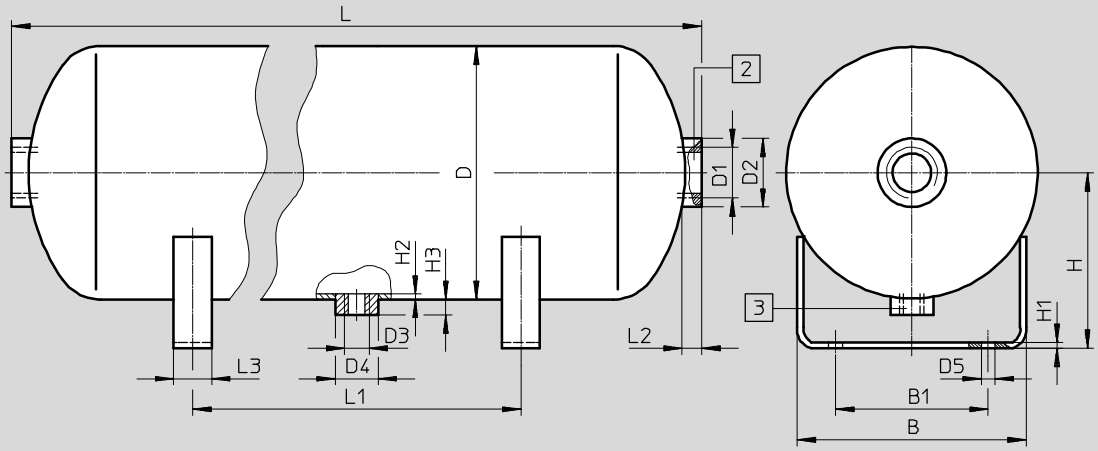

Type	B ±2	B1 ±1	D ±4 ∅	D1	D2 ∅	D3	D4 ∅	D5 ±0.5 ∅	H ±1.5	H1
VZS-20-B	150	100	206	G1	44.5	G3/8	28	9	146.5	4

Type	H2 min.	H3	L ±6	L1 ±1.5	L2	L3	Max. tightening torque	
							Connecting thread [Nm]	Condensate drain [Nm]
VZS-20-B	2	12	696	300	18	25	130	27

Note: This product conforms to ISO 1179-1 and to ISO 228-1

Ordering data		
Volume [l]	Part No.	Type
20 ±10%	**192161**	**VZS-20-B**