230V 180mm

SANDER/ POLISHER

GB

56680 - POL1200/180D SPARE PARTS DRAWING

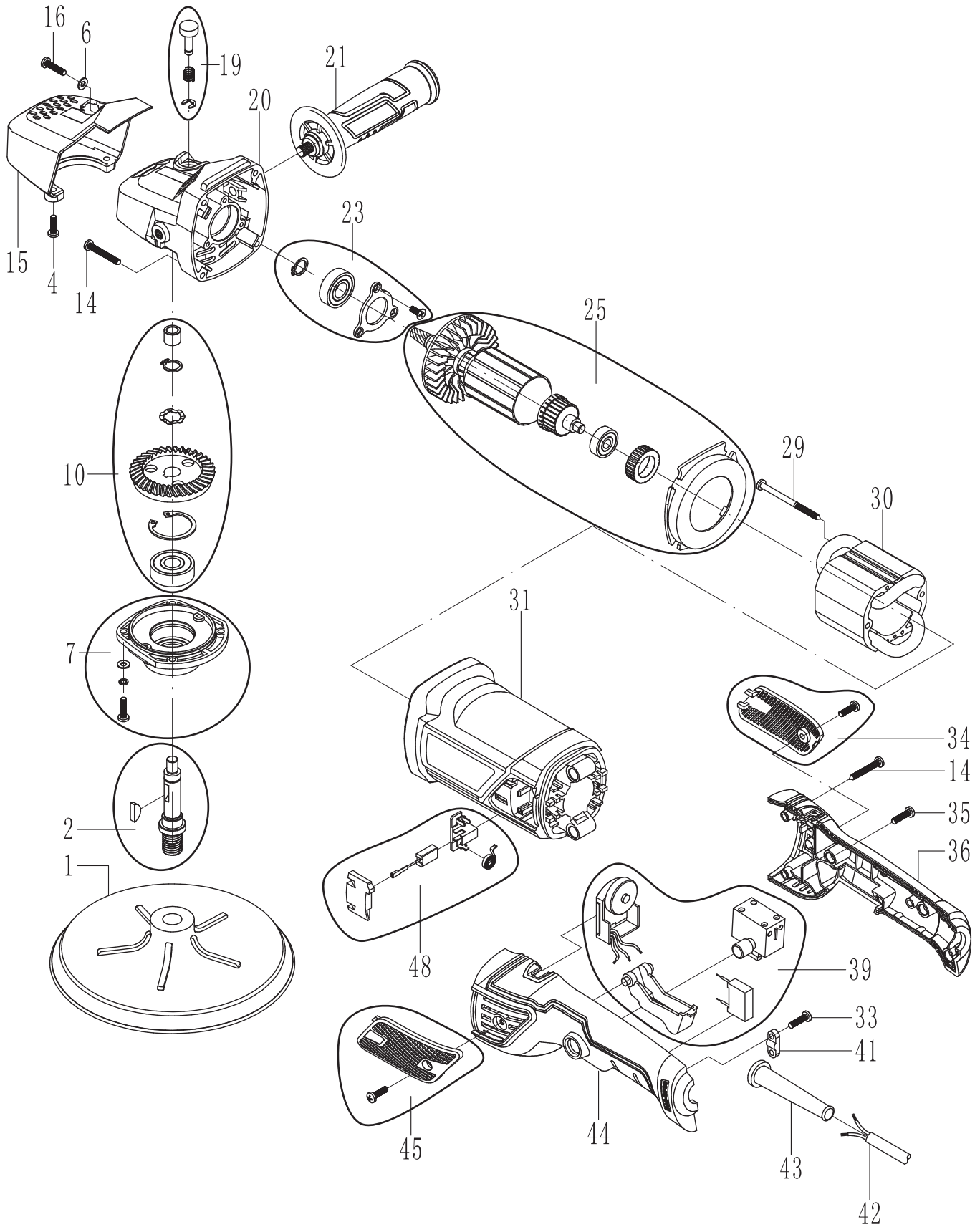

Help line: +44 (0) 23 8049 4344 Sales Desk: +44 (0) 23 8049 4333 General Enquiries: +44 (0) 23 8026 6355 internet: drapertools.com email: sales@drapertools.com

Draper Tools Limited, Hursley Road, Chandler's Ford, Eastleigh, Hampshire. SO53 1YF UK.

230V 180mm

SANDER/ POLISHER

GB

56680 - POL1200/180D SPARE PARTS LISTING

KEY No.	PART No.	STOCK No.	DESCRIPTION
1	YPOL1200/180-1	97685	Backing disc
2	YPOL1200/180-2	97828	Output shaft assembly
7	YPOL1200/180-7	97833	Front cover assembly
10	YPOL1200/180-10	97836	Large gear assembly
14	YPOL1200/180-14	97840	Self tapping screw
15	YPOL1200/180-15	97841	Head cover
16	YPOL1200/180-16	97842	Cross pan head screw
19	YPOL1200/180-19	97845	Self-lock pin assembly
20	YPOL1200/180-20	97846	Head
21	YPOL1200/180-21	97847	Side handle
23	YPOL1200/180-23	97849	Bearing pressure plate assembly
25	YPOL1200/180-25	97851	Rotor assembly
29	YPOL1200/180-29	97855	Self-tapping screw
30	YPOL1200/180-30	97856	Stator
31	YPOL1200/180-31	97857	Housing
34	YPOL1200/180-34	97859	Right cover assembly
35	YPOL1200/180-35	97860	Self-tapping screw
36	YPOL1200/180-36	97861	Right handle
39	YPOL1200/180-39	97864	Switch assembly
40	YPOL1200/180-40	97865	Capacitor
41	YPOL1200/180-41	97866	Pressing line plate
42	YPOL1200/180-42	97867	Cable
43	YPOL1200/180-43	97868	Cable jacket
44	YPOL1200/180-44	97869	Left handle
45	YPOL1200/180-45	97870	Left cover assembly
48	YPOL1200/180-48	97873	Carbon brush assembly

KEY No.	PART No.	STOCK No.	DESCRIPTION

Help line: +44 (0) 23 8049 4344 Sales Desk: +44 (0) 23 8049 4333 General Enquiries: +44 (0) 23 8026 6355 internet: drapertools.com email: sales@drapertools.com

Draper Tools Limited, Hursley Road, Chandler's Ford, Eastleigh, Hampshire. SO53 1YF UK.