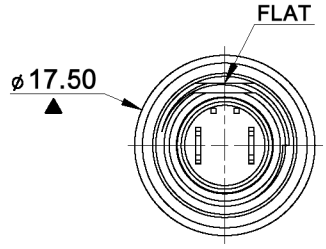

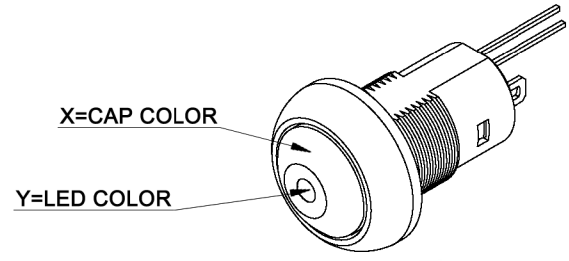

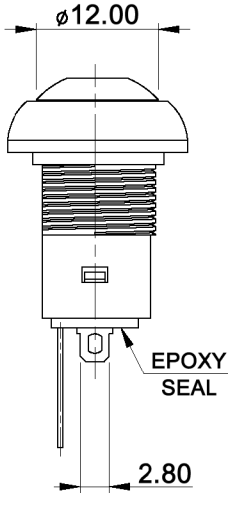

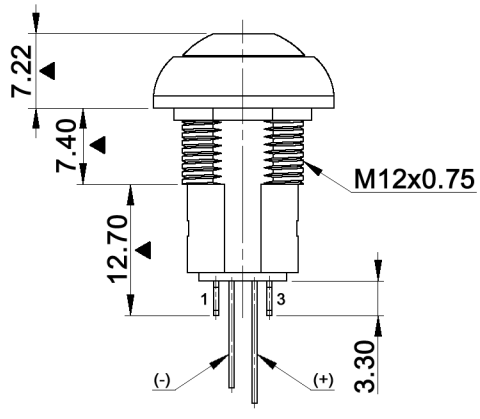

PANEL CUT-OUT

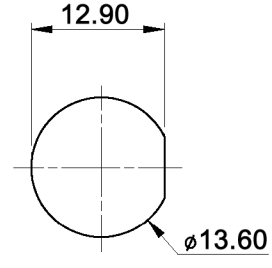

HARDWARE:

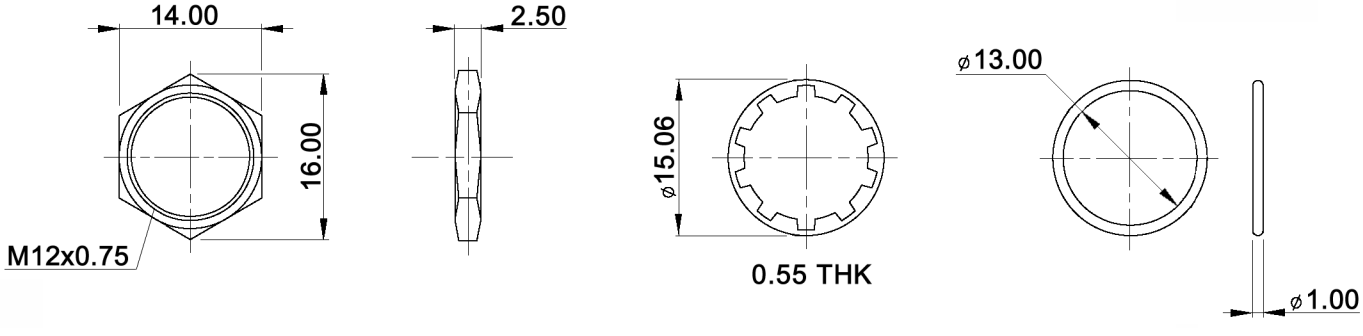

Tolerances: 0.00: ±0.25mm 0.0: ±0.40mm			Date	Name	DPWL 1 AG-xy
			03/09	dr	
Revised	01/14	dr			
Rating, electrical life	02/13	dr	knitter-switch	30 17 60	Page
LED color table	06/10	dr			
LED color table	11/09	dr			1/2
Modifications	Date	Name			

Specifications:

Contact rating:	max. 100mA, 24V DC - endurance 200 000 cycles max. 2A, 125V AC - endurance 10 000 cycles
Contact resistance:	100mOhm max.
Insulation resistance:	1GOhm min. at 500V DC
Dielectric strength:	1 000V AC RMS
Electrical life:	200 000 cycles at full load
Operating force:	4.5 - 6.5N
Torque:	0.5Nm max. applied to nut
Soldering conditions:	350°C max., 5sec.
Panel thickness:	min.: 1.5mm; max.: 4.0mm
Total travel:	2.5mm
Switching function:	off - on
Contact bounce:	10ms
Material:	Case / cap / bushing: polyamide 6/6 Terminal / contact: gold over silver plated
IP rating:	IP 67 (mounted)

X=CAP COLOR	
W	white
K	black
R	red
O	orange
Y	yellow
G	green
B	blue

Y=LED COLOR	
W	white
R	red
Y	yellow
G	green
B	blue
YG	yellow / green
YB	yellow / blue
YR	yellow / red
RG	red / green
RB	red / blue
GB	green / blue

Lens appearance	Colour	Electro-optical data (at 20mA)				Peak wavelength	Viewing angle
		Vf (V)		Iv (mcd)			
		Typ.	max.	Typ.	min.		
Water clear	super white	2.8	3.3	200.0	100.0	x=0.27 y=0.27	35°
	super red	2.0	2.5	700.0	200.0	645.0	
	yellow	2.1	2.6	100.0	55.0	589.0	
	green	2.2	2.7	130.0	70.0	565.0	
	super blue	3.1	3.6	580.0	250.0	460.0	
	super yellow	2.0	2.6	475.0	210.0	590.0	
	super green	2.0	2.6	210.0	140.0	570.0	
	super yellow	2.1	2.6	200.0	94.0	590.0	
	super blue	3.2	3.6	200.0	94.0	460.0	
	super yellow	2.1	2.6	100.0	63.0	590.0	
	super red	2.0	2.6	90.0	42.0	630.0	
	super red	2.0	2.6	90.0	42.0	630.0	
	super green	2.0	2.6	90.0	42.0	570.0	
	super red	2.0	2.6	90.0	42.0	630.0	
	super blue	3.2	3.6	200.0	94.0	460.0	
	super green	2.0	2.6	100.0	42.0	570.0	
	super blue	3.2	3.6	200.0	94.0	460.0	

RoHS-conform · 2002/95/EC

Tolerances: 0.00: ±0.25mm 0.0: ±0.40mm			Date	Name	DPWL 1 AG-xy
			03/09	dr	
			knitter-switch	30 17 60	Page 2/2
Modifications	Date	Name			