Please register on the website to download drawings without a watermark

sales@trfastenings.com
www.trfastenings.com

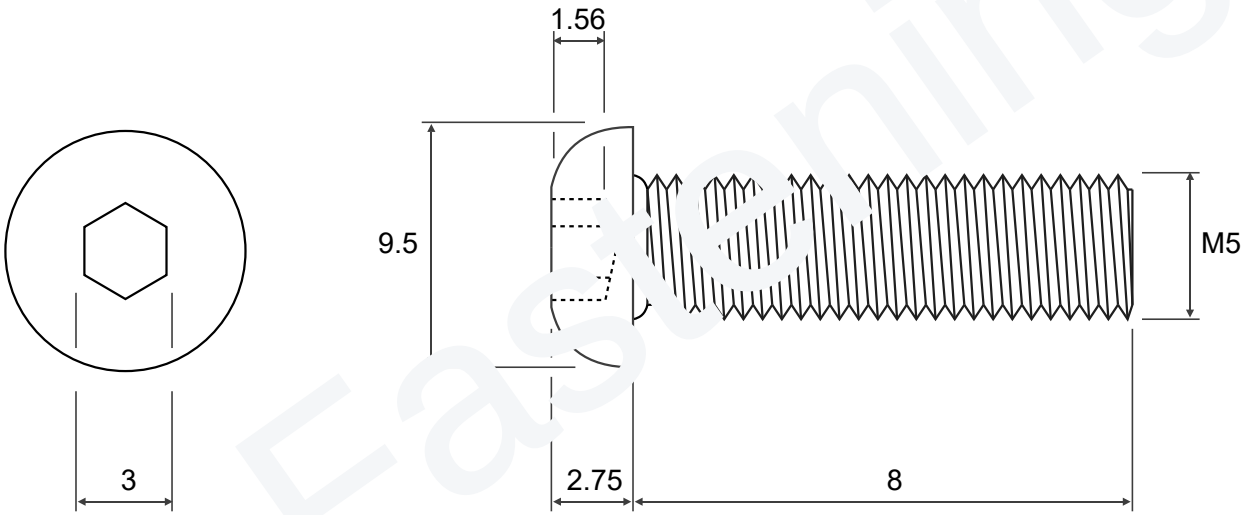

M5 x 8mm Button Head Hexagon Socket Drive Screw ISO 7380	Material	A2 Stainless Steel	Customer Part No.	
	Finish	Self Colour	Web Ref No	TR00004895-000

© TR FASTENINGS LTD. 2023 THIS DRAWING IS THE PROPERTY OF TR FASTENINGS AND IS SUPPLIED IN CONFIDENCE, AND MAY NOT WHOLLY OR PARTIALLY BE COPIED, WITHOUT THE EXPRESSED AUTHORISATION OF TR FASTENINGS LTD.

UNCONTROLLED COPY

UNLESS OTHERWISE SPECIFIED : DIMENSIONS ARE IN MILLIMETERS