Datasheet

Item no. 1587561

V1_0817_01_en

Rocker Switch

Rating	10A 125V AC 6A 250V AC	Mounting Hole	Diagram
	16A 125V AC,10A 250V AC	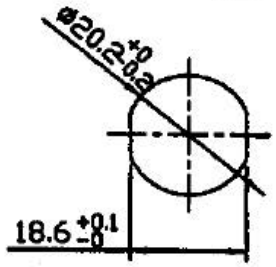	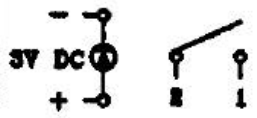
Contact Resistance	50m ohm Max.		
Insulation Resistance	DC 500V 100M ohm Min.		
Dielectric Strength	AC 1500V 1 minute		
Operation Temperature	−20°C~85°C		
Switch Function	4P SPST ON−OFF with LED		

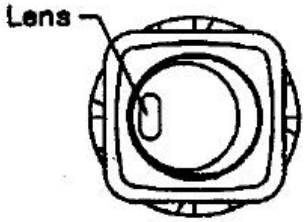

*Material
Frame: Nylon#66+33%GF, Black
Actuator: Nylon#66, Black
Lens: PC
Terminal: Copper alloy, Silver plated

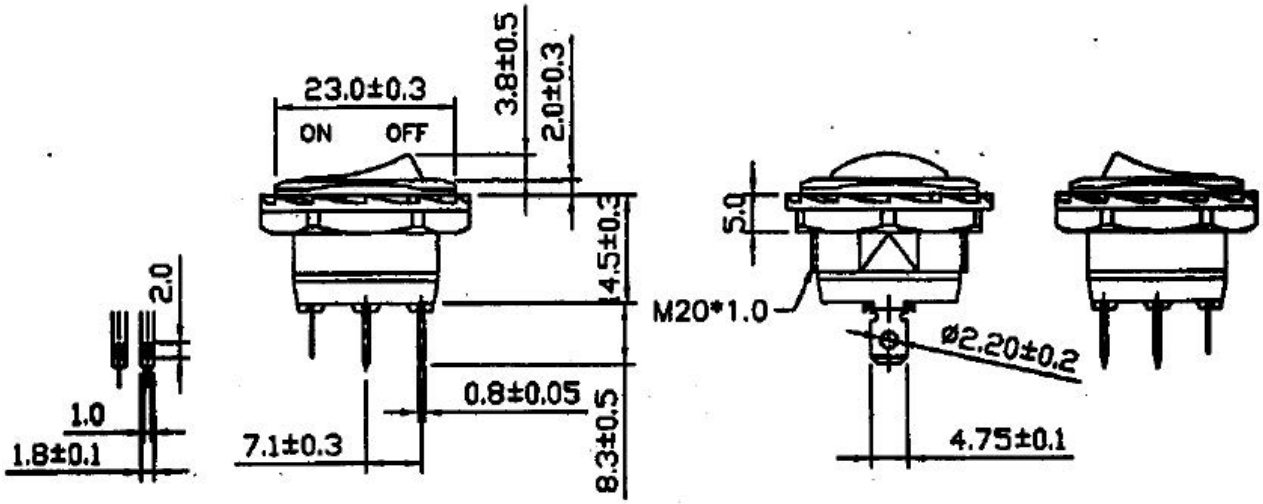

1821110	Yellow	Orange Clear
1821109	Green	Green Clear
1820949	Red	White Clear
SCI NO.	LED Color	Lens Color

Unit: mm

This is a publication by Conrad Electronic SE, Klaus-Conrad-Str. 1, D-92240 Hirschau (www.conrad.com).
All rights including translation reserved. Reproduction by any method, e.g. photocopy, microfilming, or the capture in electronic data processing systems require the prior written approval by the editor. Reprinting, also in part, is prohibited. This publication represents the technical status at the time of printing.

© Copyright 2017 by Conrad Electronic SE.