REV.	DATE	DESCRIPTION
NC	12/15/03	INITIAL RELEASE

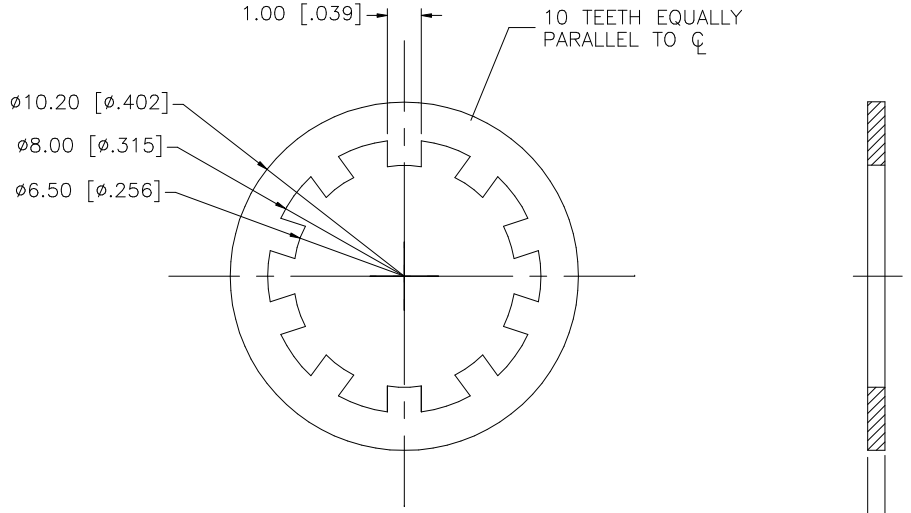

BEFORE FORMING

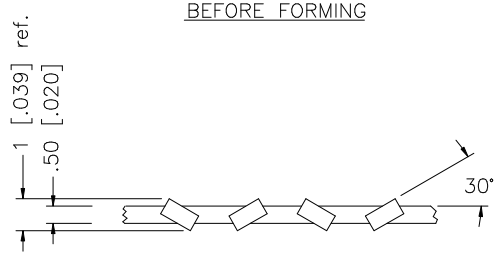

AFTER FORMING

NOTES: FINISH (PLATING THICKNESS IN MICRO-INCHES)

1. NICKEL PL. 100 MIN. OVER COPPER PL. 50 MIN.
   GOLD PL. MIN. OVER NICKEL 50 MIN.
   OVER COPPER PL. 50 MIN.
   PASSIVATED PER QQ-P-35

	DESCRIPTION	MATERIAL	FINISH	QTY
8				
7				
6				
5				
4				
3				
2				
1	LOCK WASHER	BRASS	NOTE 1	1

UNLESS OTHERWISE SPECIFIED DIMENSIONS ARE IN MILLIMETERS. DIMENSIONS IN [ ] ARE IN INCHES AND FOR CUSTOMER REFERANCE ONLY.

UNLESS OTHERWISE SPECIFIED TOLERANCES FOR MILLIMETERS ARE:
0.5 – 8mm ± 0.20mm
8 – 30mm ± 0.40mm
30 – 120mm ± 0.50mm

UNLESS OTHERWISE SPECIFIED TOLERANCES FOR INCHES ARE:
.020 – .315 = ± 0.007"
.315 – 1.180 = ± 0.015"
1.180 – 4.724 = ± 0.020"

DO NOT SCALE DRAWING

APPROVALS		DATE
DRAWN	G.R.S.	12/15/03
CHECKED		
ISSUED		
SHEET	1 OF 1	

CAD FILE C:/132/132_WASH_GOLD.DWG

Amphenol Connex

PART DESCRIPTION: LOCK WASHER

PART NO. 132_WASH_GOLD

DWG. NO. 132_WASH_GOLD.DWG | REV. NC | SIZE A | SCALE NA