Evatron Plastic Enclosures
Tel + (44) 1908 675121
www.evatron.com
sales@evatron.com

Order Code SB108

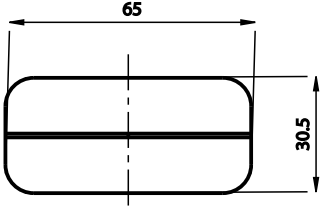

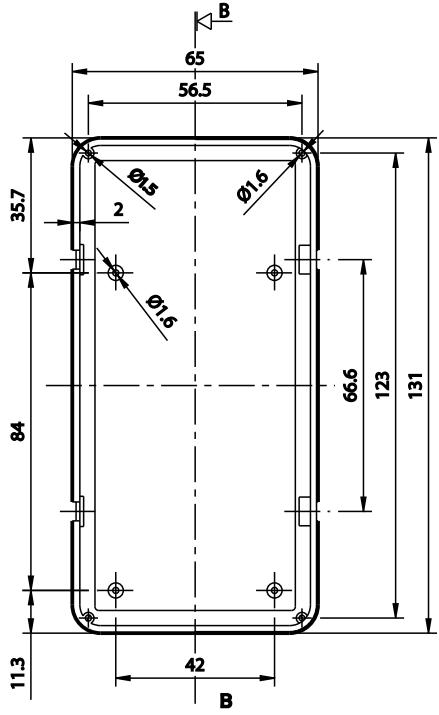
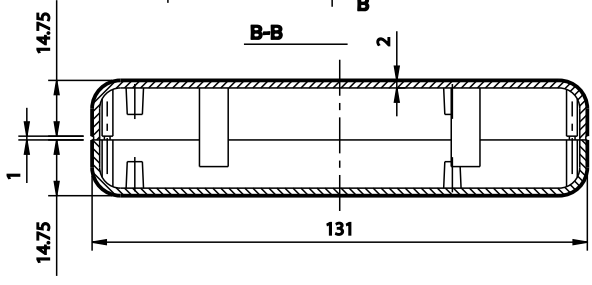
Wall thickness 1.5 mm