ACM24 Series

XP Power

24W

AC-DC POWER SUPPLIES

The ACM24 series of wall plug adaptors comply with the latest energy efficiency level VI standards with high active mode efficiency and extremely low no load power consumption. Available with a standard jack plug connector these adaptors suit a wide variety of cost sensitive industrial and medical applications while maintaining industry leading performance.

Features

- Energy efficiency level VI
- European CoC tier 2
- Medical and ITE approvals
- Interchangeable mains connectors
- Optional white versions
- Output voltages from 9V to 48V
- Class II construction
- 3 year warranty

Applications

Healthcare

Industrial Electronics & Robotics

Medical Diagnostic

Technology

Dimensions

Body only:

88.0 x 30.0 x 57.0mm (3.46” x 1.18” x 2.24”)

Models & Ratings

Model Number[1,2,5]	Output Voltage	Output Current	Total Regulation[3]	Efficiency[4]	Output Power
ACM24US09	9.0V	2330mA	±5%	86.5%	24W
ACM24US12	12.0V	2000mA		88.0%	
ACM24US15	15.0V	1600mA		87.7%	
ACM24US18	18.0V	1330mA		88.4%	
ACM24US24	24.0V	1000mA		88.4%	
ACM24US48	48.0V	500mA		88.0%	

Notes:

1. Model number is for body only. AC input plugs must be ordered separately, see AC input plug section.
2. Other output voltages available, contact sales for details.
3. Total regulation includes initial set accuracy, line and load regulation.
4. Typical average value measured at 25%, 50%, 75% and 100% at 230 VAC.
5. For white case version add suffix ‘-W’ e.g. ACM24US12-W. MOQ applies, contact sales for details.
6. For case version with AC plug add suffix ‘-EU’ for plug EU, ‘UK’ for plug UK, ‘US’ for plug US, e.g. ACM24US12-EU. MOQ applies, contact sales for details.

Input

Characteristic	Minimum	Typical	Maximum	Units	Notes & Conditions
Input Voltage	90		264	VAC	
Input Frequency	47		63	Hz	
Power Factor					EN61000-3-2 class A
Input Current			0.5	A	230VAC
Inrush Current			70	A	240VAC cold start, 25°C
No Load Input Power			75	mW	
Input Protection	Internal fuse in line				

Output

Characteristic	Minimum	Typical	Maximum	Units	Notes & Conditions
Output Voltage - V1	9		48	VDC	See Models & Ratings
Minimum Load	No minimum load required				
Start Up Delay			4	s	
Start Up Rise Time		30		ms	
Hold Up Time	10			ms	Full load and 100VAC
Total Regulation			5	%	See Models & Ratings
Transient Response			4	% deviation	Recovery within <1% within 500µs for a 60% step load change at 0.15A/µs
Ripple & Noise			150	mV pk-pk	Measured with 20MHz Bandwidth and 10µF electrolytic in parallel with 0.1µF ceramic capacitor.
Temperature Coefficient			0.05	%/°C	
Short Circuit Protection	Continuous, trip and restart (hiccup mode) with auto recovery				

General

Characteristic	Minimum	Typical	Maximum	Units	Notes & Conditions
Efficiency		87		%	Typical average of efficiencies measured at 25%, 50%, 75% and 100% load and 115VAC input
Energy Efficiency					Level VI
Isolation: Input to Output	4000			VAC	2 x MOPP
Switching Frequency	24		70	kHz	Variable
Leakage Current		30	100	µA	At 264VAC, 60Hz, from output to ground
Mean Time Between Failure	250			khrs	MIL-HDBK-217F, 25°C GB
Weight		160 (0.35)		g (lb)	Body only

Environmental

Characteristic	Minimum	Typical	Maximum	Units	Notes & Conditions
Operating Temperature	0		+60	°C	Derate from 100% load at 40°C to 50% load at 60°C
Storage Temperature	-20		+85	°C	
Cooling	Natural convection				
Operating Humidity	5		90	%	RH, non-condensing
Operating Altitude			5000	m	
Shock	1m drop onto concrete on each of 6 axes, non operating				
Vibration	10		300	Hz	2g, 0.3 decades/min, 15 mins for each of 3 axes

EMC: Emissions

Phenomenon	Standard	Test Level	Notes & Conditions
Conducted	EN55032	Level B	
Radiated	EN55032	Level B	
Harmonic Currents	EN61000-3-2	Class A	
Voltage Flicker	EN61000-3-3		

EMC: Immunity

Phenomenon	Standard	Test Level	Criteria	Notes & Conditions
Medical Device EMC	IEC60601-1-2	Ed.4.0 : 2014	as below	
Low Voltage PSU EMC	EN61204-3	High severity level	as below	
ESD Immunity	EN61000-4-2	15kV Air, ±8kV contact	A	
Radiated Immunity	EN61000-4-3	10V/m	A	
EFT/Burst	EN61000-4-4	Level 3	A	
Surge	EN61000-4-5	Level 2	A	
Conducted	EN61000-4-6	6V	A	
Magnetic Field	EN61000-4-8	30A/m	A	
Dips and Interruptions	EN61000-4-11	Dip: 100% 10ms	B	
		Dip: 70% 500ms	B	
		Int: 100% 5000ms	B	
	EN60601-1-2	Dip: 30% 25 AC Cycles	A	
		Int: 100% 0.5 AC Cycle	B	At 8 angles
		Int: 100% 1 AC Cycle	B	
		Int: >95% 5000ms	B	

Safety Approvals

Certification	Standard	Notes & Conditions
UL	UL60950-1, UL62368-1	Information Technology
	ANSI/AAMI ES60601-1	Medical, 2 x MOPP
EN	EN60950-1, EN62368-1	Information Technology
	EN60601-1	Medical, 2 x MOPP
CB	IEC60950-1, IEC62368-1	Information Technology
	IEC60601-1	Medical, 2 x MOPP
CSA	CSA C22.2 No. 60601	Medical 2 x MOPP
CCC	China Compulsory Certification, GB4943	
AU/NZ	AU/NZ 60950.1	
CE	Meets all applicable directives	
UKCA	Meets all applicable legislation	

Mechanical Details

ACM24USXX

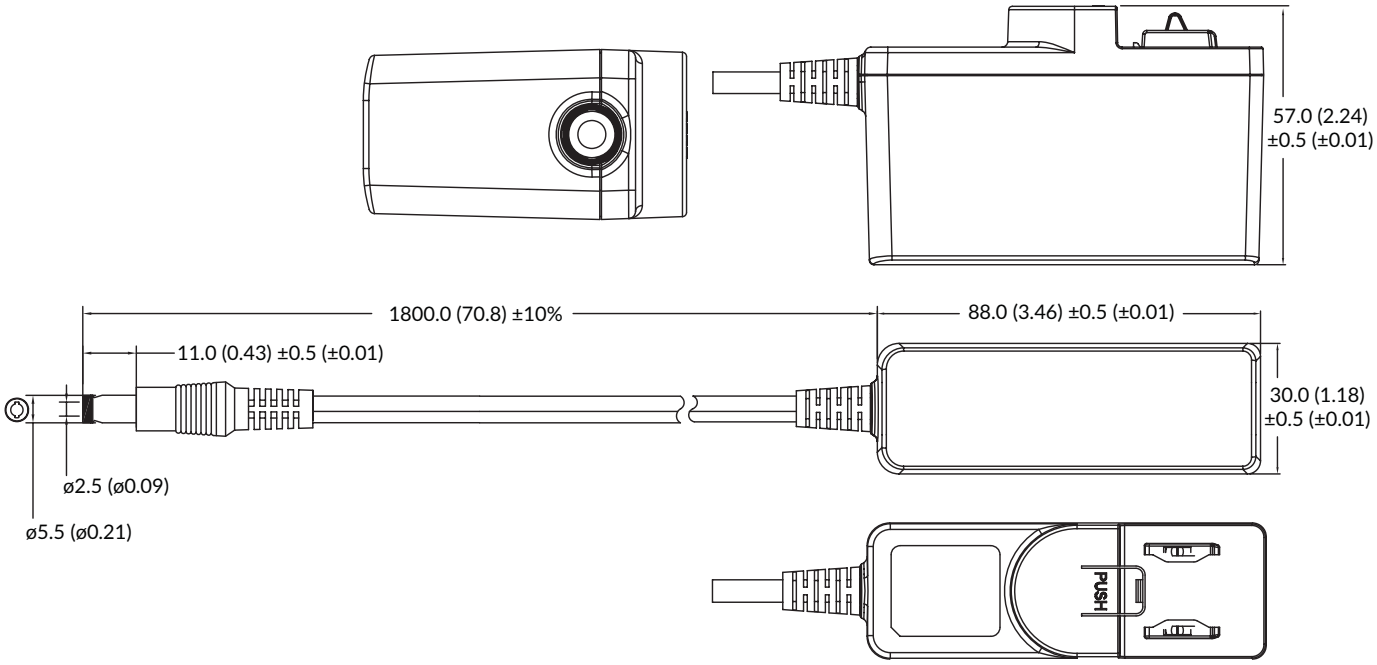

Notes:

1. All dimensions shown in mm (inches).
2. Weight: 160g (0.35lbs) approx.

Mechanical Details

AC Input Plugs

Black UK Plug: ACM PLUG UK
White UK Plug: ACM PLUG UK W

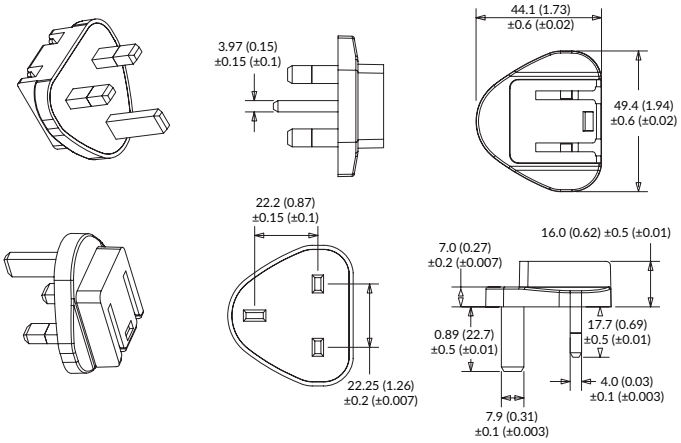

Black USA Plug: ACM PLUG US
White USA Plug: ACM PLUG US W

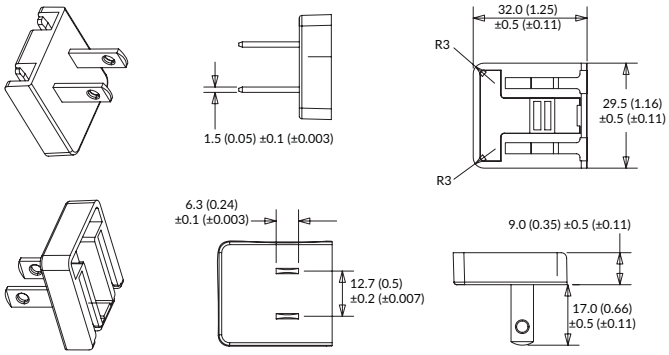

Black Australian Plug: ACM PLUG AU
White Australian Plug: ACM PLUG AU W

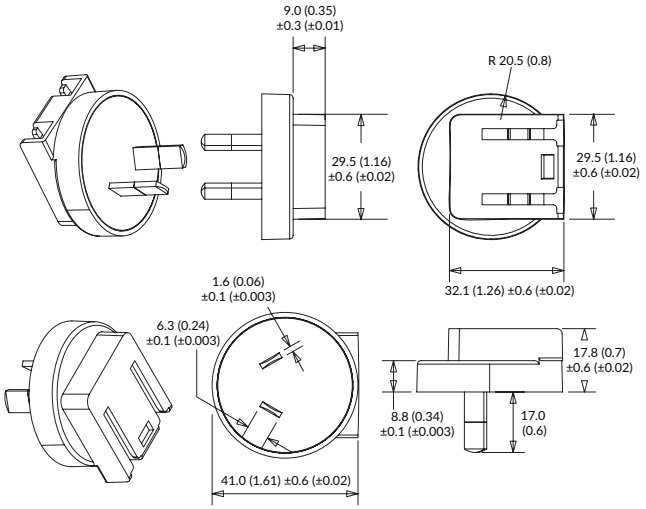

Black European Plug: ACM PLUG EU
White European Plug: ACM PLUG EU W

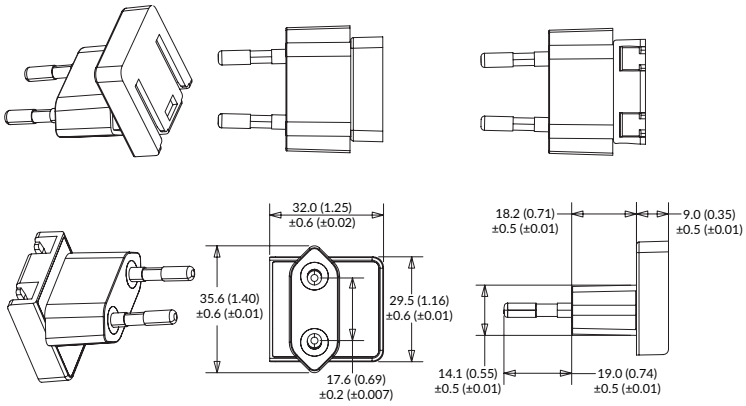
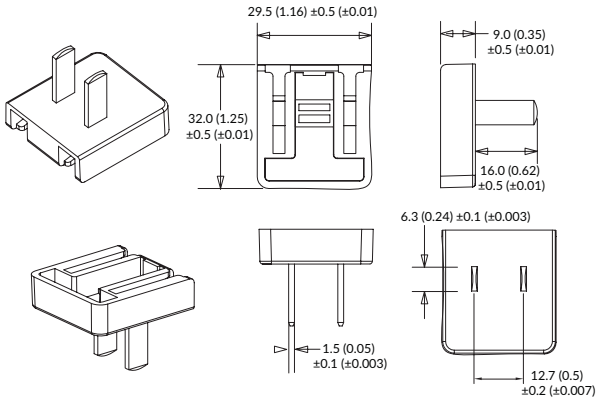
Black China Plug: ACM PLUG CN
White China Plug: ACM PLUG CN W