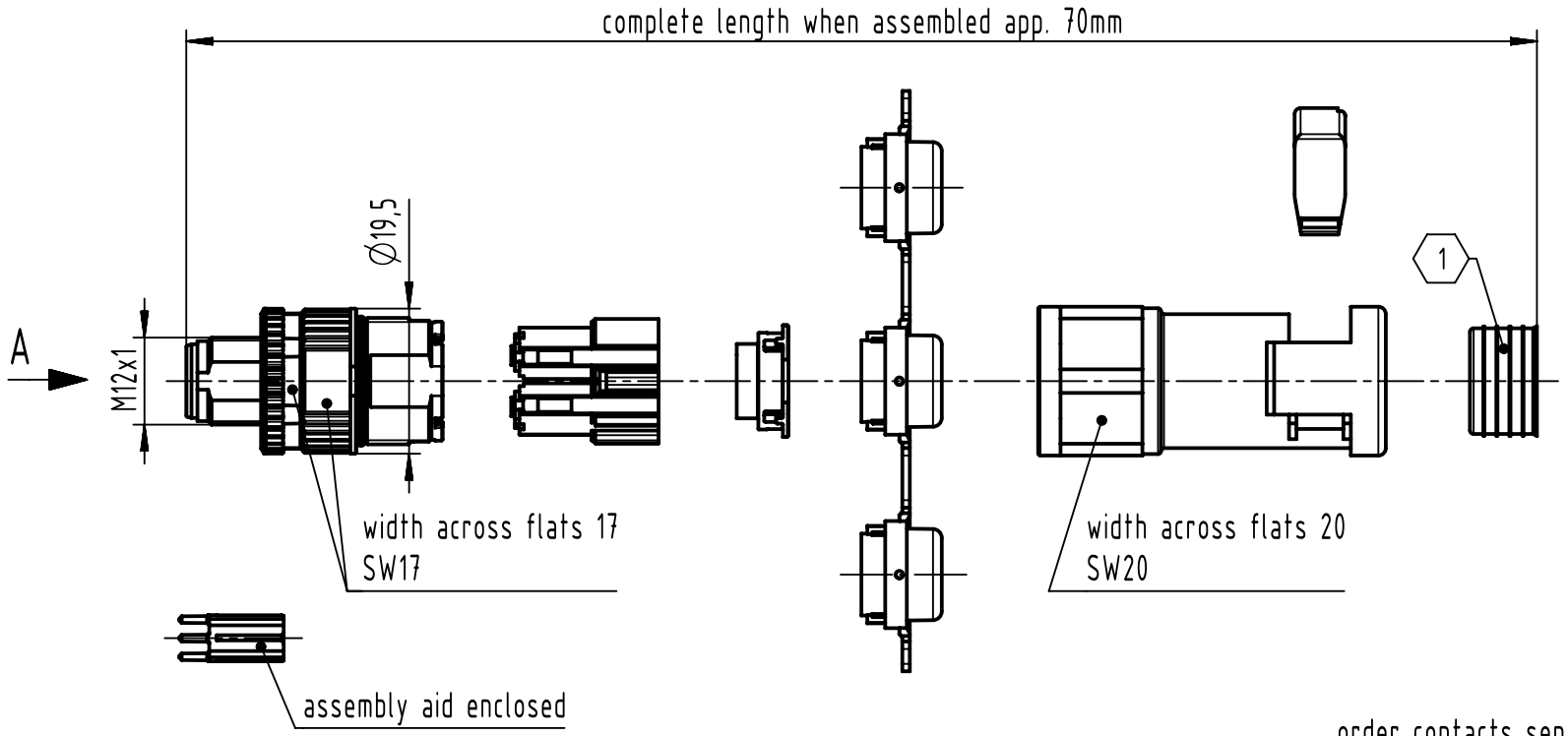


contact face based on
IEC 61076-2-101

A (2:1)

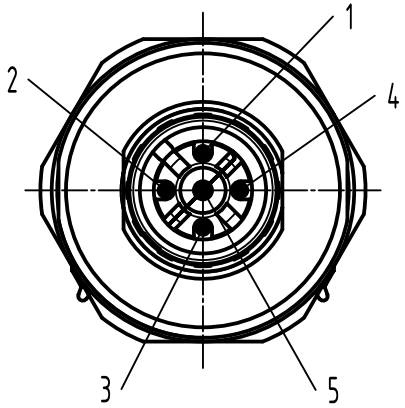


order contacts separately

| cable Ø | wire gauge | part no. |
|---|---|---|
| 4.5 - 8.8mm | AWG 26-22 | 09670005576 |
| | AWG 24-20 | 09670008576 |
| | AWG 22-18 | 09670003576 |

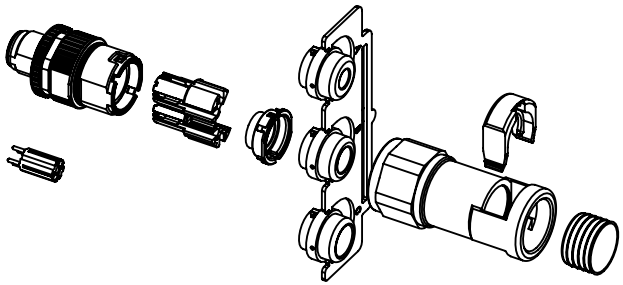

1 suitable for conduit with NW 10mm

| | | | | | |
|---|---|---|---|---|---|
| All Dimensions in mm<br>Original Size DIN A4 | Scale<br>1:1 | Free size tol. | | Ref.<br>Sub. | |
| All rights reserved<br>Department EL PD | Created by<br>HASSE | Inspected by<br>104122 | Standardisation<br>SAP_WFRT | Date<br>2022-02-04 | State<br>Final Release |
| HARTING<br>D-32339 Espelkamp | Title M12-L-CC-CRIMP-5P-ACOD-M-STR-SHLD | | | | Doc-Key / ECM-Nr.<br>100594106/UGD/004/G<br>500000210890 |
| | Type TB | Number 21038121511 | | Rev. G | Page 1/1 |

A4