THIS DRAWING IS UNPUBLISHED. RELEASED FOR PUBLICATION 2009
© COPYRIGHT 2009 ALL RIGHTS RESERVED.

REVISIONS					
ZONE	DIST				
A1	–				
REV	LTR	DESCRIPTION	DATE	DWN	APVD
	A12	0.32±0.05 added.	30MAR09	Mey	Schub
	A13	Column Sealing plug and Text SINGLE WIRE SEAL. added	30JUL09	Fry	Kryn
	A14	Wrong dimensions in area B5-6 corrected to 8+4.6 and 4+5.1	27AUG10	Kips.	Schub
	A15	Design 2 added.	29DEC2011	Kips.	Schub

STRIP FORM / Bandware

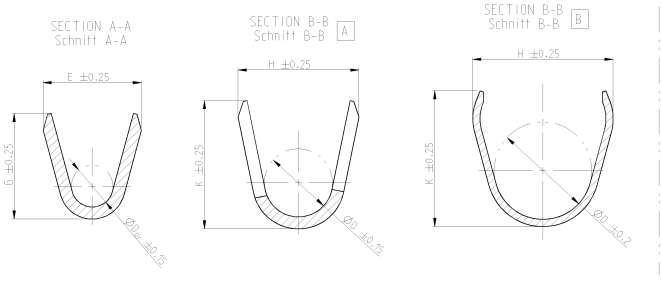

WIRE CRIMP
Drahtcrimp

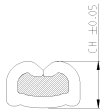

LOOSE PIECE / Einzelausfuehrung

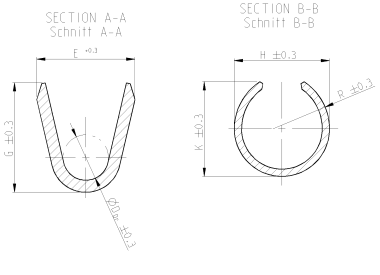

FLR- / FLK - WIRE
FLR- / FLK - Leitung

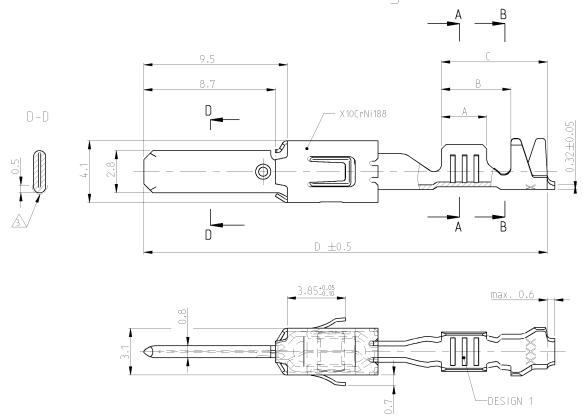

SINGLE WIRE SEAL
Einzeldichtungssystem

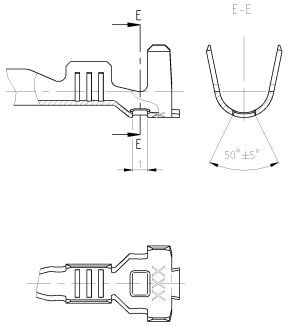

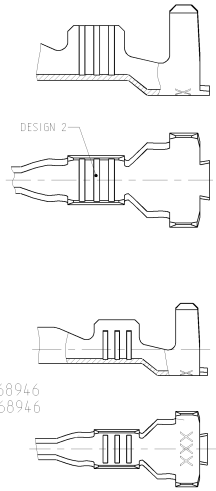

DESIGN FOR PN 968946
Ausfuehrung PN 968946

									SEE / siehe SECTION A-A Schnitt A-A	SEE / siehe SECTION B-B Schnitt B-B	SEE / siehe WIRE CRIMP Drahtcrimp	SEE / siehe SECTION A-A Schnitt A-A	SEE / siehe SECTION B-B Schnitt B-B								
SINGLE WIRE SEAL / Einzeldichtungssystem	1-1719504-2	A	1-1719503-2	1	CuSn4	1	12 AWG	max. 3.0	E = 4.0 G = 4.2 D_{Dr} = 2.0	A H = 5.3 K = 5.0 D = 3.6	AWG 12 = 2.0	-	-	1852291-3	-	3.5	6.0	7.6	26.8	5	828922-1
	1-1719504-1	A	1-1719503-1	1		1															
	3-968947-1	A	3-968966-1	1	CuSn0.20	1	>2.5 - 4.0 FLR	max. 3.7	E = 4.5 G = 4.7 D_{Dr} = 2.3	B H = 6.2 K = 6.0 D = 4.3	4.0 mm² = 2.25	DIMENSION SEE STRIP FORM Masse siehe Bandware		MQC APPLICATOR 2-541537-2	539635-1 MATRIZE : 539727-2	4.3	6.0	8.5	28.5	828985 (Ø6.4) 6	828986-1
	2-968947-2	A	2-968966-2	1	CuFe	1															
	2-968947-1	A	2-968966-1	1		1															
	1-968947-2	A	1-968966-2	1	CuSn4	1															
	1-968947-1	A	1-968966-1	1		1															
	2-962916-3	E	2-963749-3	1	CuFe	2	>1.0 - 2.5 FLR	max. 3.0	E = 3.6 G = 3.8 D_{Dr} = 1.7	A H = 5.3 K = 5.0 D = 3.6	2.5 mm² = 1.88 2.0 mm² = 1.73 1.5 mm² = 1.58	E = 2.8 G = 3.9 D_{Dr} = 1.7	H = 4.8 K = 4.5 R = 2.8	MQC APPLICATOR 2-878560-2	734440-1	3.5	6.0	7.6	26.8	828905 (Ø5.0)	828922-1
	2-962916-2	E	2-963749-2	1		1															
	2-962916-1	E	2-963749-1	1		1															
	1-962916-3	E	1-963749-3	1	CuSn4	2															
	1-962916-2	E	1-963749-2	1		1															
	1-962916-1	E	1-963749-1	1		1															
	2-962915-3	E	2-963748-3	1	CuFe	2	0.5 - 1.0 FLR	max. 2.1	E = 2.6 G = 2.9 D_{Dr} = 1.2	A H = 5.0 K = 4.8 D = 3.3	1.0 mm² = 1.36 0.75 mm² = 1.27 0.5 mm² = 1.18	E = 2.2 G = 2.9 D_{Dr} = 1.1	H = 4.6 K = 4.3 R = 2.3	MQC APPLICATOR 2-878559-2	734438-1	3.0	5.4	7.0	26.8	828904 (Ø5.0)	
	2-962915-2	E	2-963748-2	1		1															
	2-962915-1	E	2-963748-1	1		1															
	6-962915-6	E		1	CuSn4	2 2															
	1-962915-3	E	1-963748-3	1		2															
	1-962915-2	E	1-963748-2	1		1															
	1-962915-1	E	1-963748-1	1		1															
	1-965982-3	A	1-965983-3	1	CuSn4	2	0.2 - 0.5 FLK	max. 2.1	E = 2.1 G = 2.1 D_{Dr} = 0.8	A H = 4.7 K = 4.5 D = 3.2	0.5 mm² = 1.12 0.35 mm² = 1.05 0.2 mm² = 0.98	E = 1.7 G = 2.15 D_{Dr} = 0.8	H = 4.2 K = 4.15 R = 2.4	MQC APPLICATOR 2-878558-2	539635-1 MATRIZE : 539737-2	2.5	4.9	6.5	26.8	828904 (Ø5.0)	
	1-965982-1	A	1-965983-1	1		1															
UNSEALED / ungedichtet	3-968946-1	A	3-968965-1	1	CuSn0.20	1	>2.5 - 4.0 FLR	2.7 - 3.7	E = 4.5 G = 4.7 D_{Dr} = 2.3	A H = 5.7 K = 5.9 D = 3.3	4.0 mm² = 2.25	E = 3.4 G = 4.7 D_{Dr} = 2.3	H = 4.6 K = 5.1 R = 2.6	MQC APPLICATOR 2-541534-2	539635-1 MATRIZE : 539723-2	4.3	6.6	8.5	28.5		
	2-968946-2	A	2-968965-2	1	CuFe	1															
	2-968946-1	A	2-968965-1	1		1															
	1-968946-2	A	1-968965-2	1	CuSn4	1															
	1-968946-1	A	1-968965-1	1		1															
	2-962843-3	C	2-963747-3	1	CuFe	2	>1.0 - 2.5 FLK	2.4 - 3.7	E = 3.6 G = 3.8 D_{Dr} = 1.7	A H = 5.5 K = 5.7 D = 3.2	2.5 mm² = 1.88 1.5 mm² = 1.58	E = 2.8 G = 3.9 D_{Dr} = 1.7	H = 4.2 K = 5.1 R = 2.4	MQC APPLICATOR 2-878552-2	734417-3	3.6	5.2	8.9	28.6		
	2-962843-2	C	2-963747-2	1		1															
	2-962843-1	C	2-963747-1	1		1															
	1-962843-3	C	1-963747-3	1	CuSn4	2															
	1-962843-2	C	1-963747-2	1		1															
	1-962843-1	C	1-963747-1	1		1															
	2-962842-3	E	-	1	CuFe	2	>1.0 - 2.5 FLR	2.1 - 2.9	E = 3.6 G = 3.8 D_{Dr} = 1.7	A H = 4.3 K = 4.5 D = 2.6	2.5 mm² = 1.88 2.0 mm² = 1.73 1.5 mm² = 1.58	E = 2.8 G = 3.9 D_{Dr} = 1.7	H = 3.6 K = 4.1 R = 2.1	MQC APPLICATOR 2-878551-2	734417-2	3.6	5.2	8.2	27.9		
	2-962842-2	F	-	1		1															
	2-962842-1	E	-	1		1															
	1-962842-3	E	-	1	CuSn4	2															
	1-962842-2	E	1-963746-2	1		1															
	1-962842-1	E	1-963746-1	1		1															
	2-962841-3	F	-	1	CuFe	2	0.5 - 1.0 FLR	1.4 - 2.1	E = 2.5 G = 2.8 D_{Dr} = 1.1	A H = 3.2 K = 3.4 D = 1.8	1.0 mm² = 1.36 0.75 mm² = 1.27 0.5 mm² = 1.18	E = 2.2 G = 2.8 D_{Dr} = 1.1	H = 2.8 K = 3.0 R = 1.6	MQC APPLICATOR 2-878550-2	734417-1	3.0	4.6	7.0	26.7		
	2-962841-2	F	-	1		1															
	2-962841-1	F	2-962841-1	1		1															
	1-962841-3	F	1-963745-3	1	CuSn4	2															
	1-962841-2	F	1-963745-2	1		1															
	1-962841-1	F	1-963745-1	1		1															
	2-963860-3	B	-	1	CuFe	2	0.2 - 0.5 FLR	1.3 - 1.6	E = 2.1 G = 2.1 D_{Dr} = 0.8	A H = 2.9 K = 2.9 D = 1.4	0.5 mm² = 1.12 0.35 mm² = 1.05 0.2 mm² = 0.98	E = 1.7 G = 2.1 D_{Dr} = 0.8	H = 2.5 K = 2.5 R = 1.4	MQC APPLICATOR 2-878549-2	734538-1	2.5	3.7	5.8	25.5		
	2-963860-2	B	2-963861-2	1		1															
	2-963860-1	B	2-963861-1	1		1															
	1-963860-3	B	1-963861-3	1	CuSn4	2															
	1-963860-2	B	1-963861-2	1		1															
	1-963860-1	B	1-963861-1	1		1															
TE ORDER-NO. STRIPFORM Bandware		REV	TE ORDER-NO LOOSE PIECE Einzelausfuehrung	DESIGN SERRATIONS Ausfuehrung Serrations	MATERIAL Werkstoff	SURFACE Oberflaeche	DGB mm²	INSULATIONØ Isolationsø mm	STRIP FORM WIRE CRIMP Drahtcrimp / INSUL. CRIMP Isolationscrimp Bandware		WIRE CRIMP HEIGTH CH Drahtcrimphoehe CH	LOOSE PIECE WIRE CRIMP Drahtcrimp / INSUL. CRIMP Isolationscrimp Einzelausfuehrung		APPLICATION TOOL Anschlagwerkzeug	HAND TOOL Handzange	A	B	C	D	TE ORDER-NO. SINGLE WIRE SEAL Einzeldichtungssystem (CAVITY DIAMETER) (Kammerdurchmesser)	TE ORDER-NO. SEALING PLUG Blindstopfen
									CRIMP DIMENSION mm Crimpabmessungen mm					EXTRACTION TOOL Ausdrueckwerkzeug No. 968107-1							

NOTES
Bemerkungen

1. CONTACT AREA PRE SILVER MIN. 3µm
CANTILEVER SPRING PLAIN
Kontaktzone vorversilbert min. 3µm
Ueberfeder blank

2. CONTACT BODY Ni-PLATING MIN. 0.5µm; CONTACT AREA PRE-GOLD MIN. 0.6µm
OVER NICKEL; CRIMP AREA PRE-TIN
CANTILEVER SPRING PLAIN
Kontaktkoerper vernickelt min. 0.5µm; Kontaktzone vorvergoldet min. 0.6µm ueber Nickel
Crimpzone vorverzinnt; Ueberfeder blank

3. — · · — · · — IN THIS AREA CRACK SHAPING AT THE SURFACE PERMISSIBLE
In diesem Bereich Rissbildung in der Oberflaeche zulaessig

4. PRE-TIN MIN. 1µm; CANTILEVER SPRING PLAIN
vorverzinnt min. 1µm; Ueberfeder blank

5. AWG 12 TXL 828905-1 OR / oder 282536-1
AWG 12 GXL 638865-1

6. ATTENTION! CONSTRUCTION OF THE CONTACT CAVITY IN THE AREA
OF THE SINGLE WIRE SEAL IS Ø6.4 $^{+0.1}_{-0.05}$
Achtung! Die Kammer ist im Bereich der Einzeldichtung
auf Ø6.4 $^{+0.1}_{-0.05}$ auszulegen

7. PUNCHED WITH VOLATILIZING STAMPING-OIL
Gestanzt mit verfluechtigendem Stanzoel

THIS DRAWING IS A CONTROLLED DOCUMENT.	DRN H. Gerlach 16JUN09	TE Connectivity	
DIMENSIONS: mm	TOLERANCES UNLESS OTHERWISE SPECIFIED: 0 PLC ±, 1 PLC ±0.2, 2 PLC ±, 3 PLC ±, ANGLES ±1°	CHK H. Bleicher	PRODUCT GROUP DRAWING FOR TAB 2.8x0.8 Produktgruppenzeichnung fuer Flachstecker 2.8x0.8
		PRODUCT SPEC 108-18063	NAME
		APPLICATION SPEC 114-18051	SIZE A0 / CODE 00779 / DRAWING NO C-1355052 / RESTRICTED TO -
MATERIAL -	FINISH -	WEIGHT -	CUSTOMER DRAWING / SCALE 10:1 / SHEET 1 of 1 / REV A15