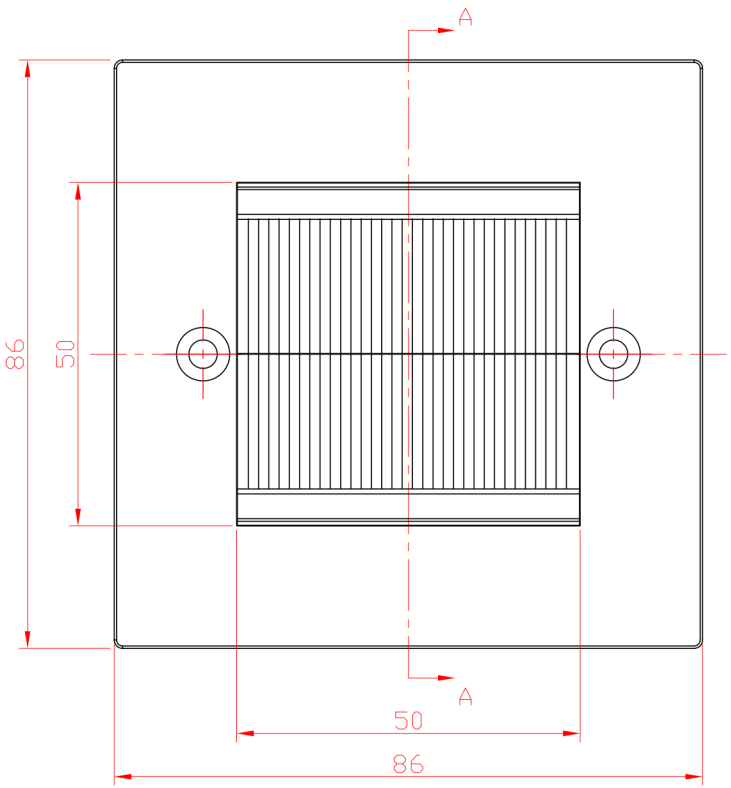

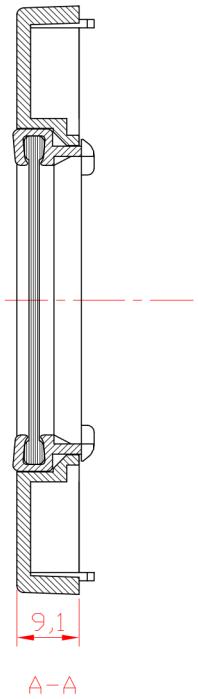

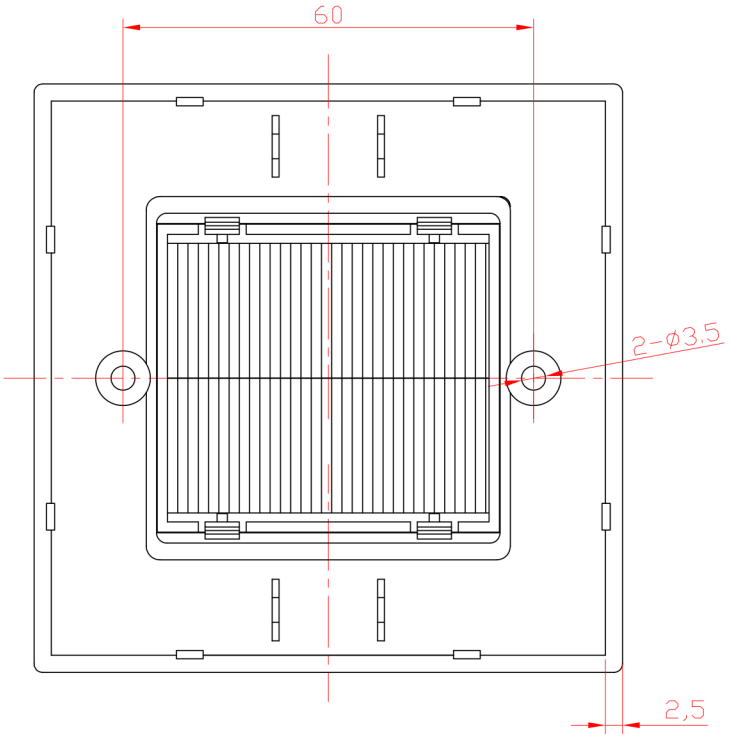

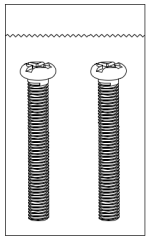

(3.5*25)X2

NOTES:

PHYSICALS:NO BURR, DEFORMATION, SCRATCHES, STAINS AND OTHER DEFECTS;

Weight:

SYM	Number	Bill No. of Alteration	Signature	Date

Drawn	Ding jian bo	2015.12.11	Tolerance
Checked	Ge pei jun	2015.12.11	0.00-20.00 ±0.10 20.00-50.00 ±0.15 50.00-100.00 ±0.20 100.00- ±0.25 Angle ±30'
Approved	Wang wei jun	2015.12.11	

Material	ABS			Item No.	
Angles Projection	Size	Scale	Unit	Part Name	Brush Face Plate 2 Port
	A4	X:1	mm		
Sheet	1 OF 1	Version: A/0		ERP Part No.	