REVISIONS		
ISS	ZONE	DESCRIPTION\PER REQUEST\DATE

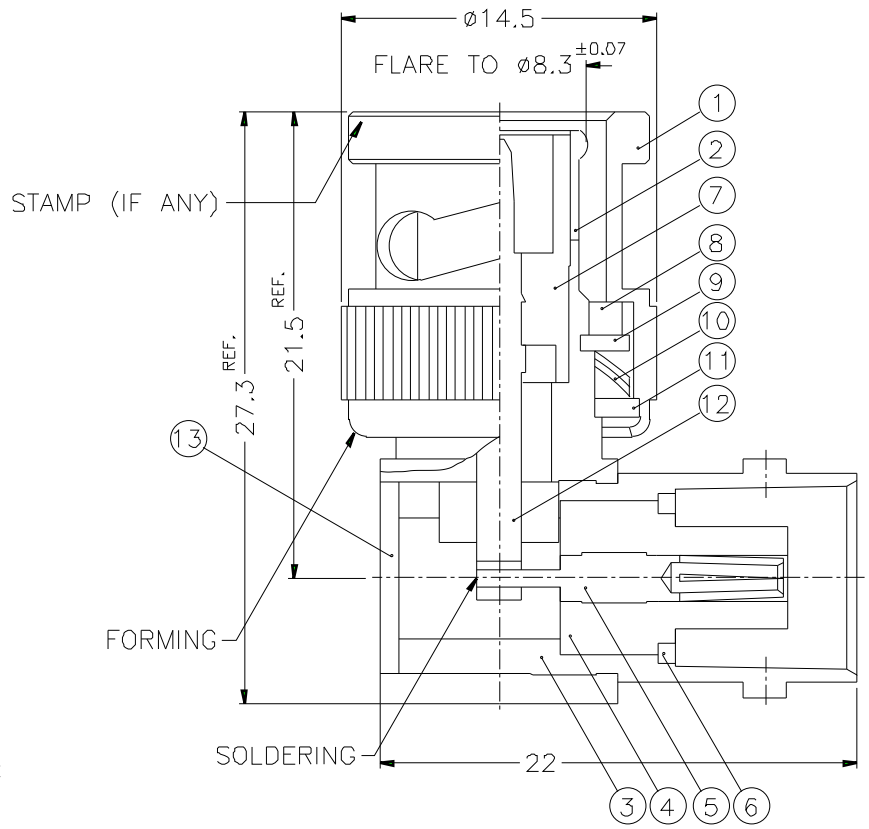

NOTES: FINISH (PLATING THICKNESS IN MICRO-INCHES)
1. BRASS PER QQ-B-626
2. BRASS PER QQ-B-613
3. NICKEL PL. 100 MIN. THICK OVER COPPER STRIKE
4. NICKEL PL. 200 MIN. THICK OVER COPPER STRIKE
5. PHOSPHOR BRONZE PER QQ-B-750
6. GOLD PL. 3 MIN. THICK OVER NICKEL PL. 100 MIN. THICK OVER COPPER STRIKE

NO.	DESCRIPTION	MATERIAL	FINISH	Q'TY	DRAWING NO
13	COVER	NOTE 2	NOTE 3	1	CV-895X07-T
12	CONTACT PIN	NOTE 1	NOTE 6	1	B5091-6-50
11	WASHER	NOTE 2	NOTE 3	1	WS-128/9X08
10	SPRING	SK5	NOTE 4	2	B50000-6
9	RETAINER RING	NOTE 1	NOTE 3	1	B50000-5
8	GASKET	RUBBER	RED	1	GS-115/8X15
7	INSULATOR	DELRIN	NATURAL	1	B50002-3-50
6	LOCK RING	NOTE 2	NOTE 3	1	B7700-4
5	CONTACT PIN	NOTE 5	NOTE 6	1	B5990-5
4	INSULATOR	DELRIN	NATURAL	1	B5990-4-50
3	BODY	NOTE 1	NOTE 3	1	B5990-3
2	HOUSING	NOTE 1	NOTE 3	1	B7996-2
1	SHELL	NOTE 1	NOTE 3	1	B50000-1-B

DIMENSIONS ARE IN MILLIMETERS

UNLESS OTHERWISE SPECIFIED TOLERANCES
0.5-6 = ±0.2
6-30 = ±0.4
30-120 = ±0.6
120-315 = ±1
315-1000 = ±1.6
1000-2000 = ±2.4

SCALE 3/1 | ISSUE A

PART NO. B5072A1-ND3G-50

APPROVED | DATE 10-11-01'

CHECKED | DATE 10-11-01'

DRAWN | DATE 10-11-01'

FILE NO

Amphenol

TITLE
BNC MALE TO FEMALE R/A ADAPTOR

DRAWING NO.
KJ-B5072A1-ND3G-50

ITEM NO.