ABBATRON

Premier Supplier of Electronic Hardware

HH Smith

Quality Is In the Details

Full Line Catalog 106

ABBATRON

HH Smith

Through strategic acquisitions at the beginning of the millennium, Abbatron's leadership set the course to enter the electronics industry by bringing innovative production techniques and employing state-of-the-art lean manufacturing systems. Our 40,000 square foot factory provides the products and services featured in this catalog and we look forward to expanding our offering as new RoHS compliant products are successfully introduced.

Our staff, representatives, and contracted distributors look forward to serving you and your associates with the highest level of quality and service at a price you can afford.

"May we have an opportunity to join your lean manufacturing team and enjoy mutual success?"

ABBATRON

HH Smith

ABBATRON HH Smith
632 Arch Street P.O. Box 726
Meadville, PA 16335

sales@abbatron.com
www.abbatron.com

Tel: 1-888-847-6484
Fax: 1-814-333-1912

Abbatron's 40,000 square foot facility in Pennsylvania is equipped with a wide variety of screw machines, CNC lathes, molders, stamping machines, and more. All to produce for you the part that fits.

For more information on how Abbatron can meet your special requirements, see inside back cover for a complete list of authorized Abbatron distributors or visit our web site at www.abbatron.com to find a sales representative in your area.

HUBZone Certification extended through 2010

MEADVILLE, PA – The United States Small Business Administration has awarded Abbatron with 7(J) status as a HUBZone Certified Business Concern. This certification significantly benefits Abbatron as it enables aggressive pursuit of additional opportunities with the federal government and other major private sector contractors to the U.S. government. Abbatron has been registered under HUBZone number 19229 and is duly identified on the federal site for Central Contractor Registration (CCR). Approved under the North American Industry Classification System (NAICS) codes 334419 and 332721, Abbatron may pursue contracts under other NAICS codes as qualified to perform. Although no additional business is guaranteed under this certification, greater consideration in future contract awards is likely.

The HUBZone Empowerment Contracting Program stimulates economic development and creates jobs in urban and rural communities by providing federal contracting preferences to small businesses. These preferences go to small businesses that obtain HUBZone (Historically Underutilized Business Zone) certification in part by employing staff who live in a HUBZone. The company must also maintain a "principal office" in one of these specially designated areas. [A principal office can be different from a company headquarters, as explained in our section dedicated to Frequently Asked Questions.] The program resulted from provisions contained in the Small Business Reauthorization Act of 1997. From http://www.sba.gov/hubzone/

For more information, please contact the factory at 888-847-6484.

CAGE CODE:
91967

NAICS CODES:
332721-334419

STANDARD INDUSTRIAL CLASSIFICATION:
3678 Electroinc Connectors
3679 Electronic Components, NEC

FEDERAL SUPPLY CLASSIFICATION:
5935-5940-6627

Abbaton is a major designer and manufacturer of Milspec Components.

RoHS Compliance

Restriction of Hazardous Substances
Directive 2002/95/EC

Background

As a result of environmental concerns the EU (European Union) has legislated the restriction of certain hazardous materials in all new electrical and electronic equipment sold in member EU countries on or after July 1, 2006. Specifically, with the exception of those items listed as exempted in the annex to Directive 2002/95/EC, the maximum concentration values by weight in homogeneous materials are limited to:

Cadmium (Cd)	0.01%
Hexavalent Chromium (Cr^{+6})	0.10%
Lead (Pb)	0.10%
Mercury (Hg)	0.10%
Polybrominated Biphenyls (PBB)	0.10%
Polybrominated Diphenyl Ethers (PBDE)	0.10%

The term "homogeneous" with regards to the directive is understood as 'of uniform composition throughout'. Examples of 'homogeneous materials' are individual types of plastics, ceramics, glass, metals, alloys, paper, boards, resins, and coatings. Homogenous material as related to the directive implies individual material that cannot be mechanically disjointed into different materials.

The term 'mechanically disjointed' means that the material can be, in principle, separated by mechanical actions such as for example unscrewing, cutting, crushing, grinding and abrasive processes.

RoHS Compliance

Abbatron is now in compliance to Directive 2002/95/EC (the RoHS directive) using parallel efforts related to internal manufacturing methods, supply chain, and design.

Manufacturing Methods

- As of March 1, 2005 all soldering operations at Abbatron use lead-free soldering materials.
- As of June 30, 2005 each master file record of any raw material, component, or finished product inventoried at Abbatron was updated to reflect one of two classifications:
    - RoHS compliant
    - Not RoHS compliant

  Note: with certain limited exceptions the vast majority of Abbatron's existing parts are and have always been RoHS compliant. Products made with certain finishes such as tin/lead and yellow irridite, and certain phenolics which use flame-retardants are not currently RoHS compliant. Parallel to our efforts to clearly identify any nonconforming materials in our inventory master files, we are investigating cost-effective alternatives which will conform to RoHS requirements.

Part Number Changes

Revision levels (Rev Levels) are used on all Abbatron documents related to customer order confirmations, shipment documentation, inventory control, production work orders, purchase orders issued to our vendors, etc.

Our strategy regarding Revision Level changes to reflect RoHS compliance status is as follows:

- No revision number change is required for any raw materials, components, or finished parts that have always been RoHS compliant.
- Subsequent to June 30, 2005 any design or manufacturing method change to a previously nonconforming part which causes it to come into RoHS compliance will require the issuance of a new revision level (Rev Level) to indicate compliance to the RoHS directive.

Package Marking

Production operations began July 1, 2005 to mark the packaging containing new production of RoHS compliant parts to indicate RoHS compliance. (Note: It is not possible from a practical standpoint for Abbatron to re-label existing inventories produced prior to July 1, 2005. This will not be an issue, however, because the vast majority of inventories are already RoHS compliant and because each package contains a manufacture date that can be used to determine RoHS compliance status.)

Supply Chain

Since March 1, 2005 Abbatron has been requiring all raw material, component, plating, and other vendors to complete supplier questionnaires regarding the RoHS compliance of the products they supply to Abbatron.

Design

As of March 1, 2005 all new designs require RoHS compliant raw materials, components, and plating specifications except for customer-specific parts for which the customer has provided written a deviation specifically permitting deviation from RoHS compliance with regards to that particular item.

Summary

Abbatron, LLC is committed to, and has actively persued compliance with the RoHS directive as of its July 1, 2006 effective date. Should you have any questions regarding Abbatron's RoHS related initiatives, please contact Abbatron's customer service staff, representative, or contracted distributor.

Machining Capability

Up to 2” diameter barstock. 10 & 12-axis Swiss style turning, with live tooling, to .812” diameter. Tolerances to +/- .00020”. Hexagon, square, and special shapes are also accommodated.

Materials

Steel, Stainless Steel, Titanium, Copper, Brass, Aluminum and Plastics. We are experienced with a wide variety of material and special requirements of each.

Order Quantities

We welcome orders for quantities in the 500 to 1,000,000+ range. Smaller quantities of prototypes may be produced for first time orders.

Lean Manufacturing

Lean Manufacturing allows us to offer Just-In-Time programs and work seamlessly with your Lean Operations.

Quality Assurance

Our Quality Assurance Program is utilized throughout every step in the manufacturing process. From the receipt of your purchase order to the shipment leaving our dock, every aspec of quality is controlled. Due to our consistent quality, several ISO 9000 compliant customers have reduced and even eliminated their incoming inspection of our products.

Engineering Assistance

Design engineering assistance is available. Because we have a unique perspective to the design of your components we have often been asked to assist in this area. Many times consideration is given to functionality without considering how economically the part may be manufactured. We have the capability to assist your engineers with problem solving and design development often resulting in reduced costs and improved quality.

Secondary Operation

In-House Secondary Operation capabilities includes milling, drilling, threading, stamping, over-molding and assembling. In addition to conventional machinery, several custom built machines are utilized to accurately and efficiently complete a variety of demanding operations.

Plating and Heat Treating requirements are easily accommodated. Working with proven vendors, we are able to provide these additional services to our customers.

Abbatron
632 Arch Street
Meadville, PA 16335
Tel: 814-724-6440
Fax: 814-333-1912
email - sales@abbatron.com

ABBATRON

Premier Supplier of Electronic Hardware

CUSTOM CABLE QUOTE FORM

Please fax RFQ to (814) 333-1912

Name:_____

Company:_____

Address:_____

City:_____ State:_____ Zip:_____

Phone:_____ Fax:_____

Email:_____

URL:_____

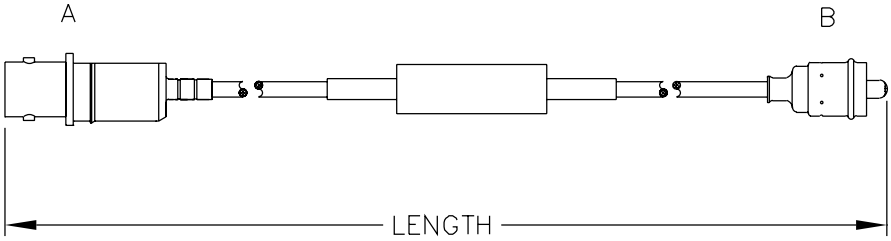

Connector A

Type: ☐ Open End, ☐ RCA
☐ Banana, ☐ Test Tip
☐ Alligator Clip
☐ RF: Specify _____
☐ Other_____

Style: ☐ Bulkhead Jack, ☐ Jack
☐ Plug, ☐ Right Angle Jack
☐ Right Angle Plug

Series: ☐ Strain Relief, ☐ Heat Shrink
☐ Over Molded, ☐ Crimped
☐ Other_____

Connector B

Type: ☐ Open End, ☐ RCA
☐ Banana, ☐ Test Tip
☐ Alligator Clip
☐ RF: Specify: _____
☐ Other_____

Style: ☐ Bulkhead Jack, ☐ Jack
☐ Plug, ☐ Right Angle Jack
☐ Right Angle Plug

Series: ☐ Strain Relief, ☐ Heat Shrink
☐ Over Molded, ☐ Crimped
☐ Other_____

Cable Length: _____ Cable Type: _____

Quantity Requested: _____ Date Required: _____

Target Price: _____ Spec Sheet Attached? _____

Any Additional Information:

Abbatron test leads are precision-made interconnect wire devices for temporary attachment of wire leads between equipment and circuitry. Each style of lead is meant for a specific application and will provide the greatest degree of safety and convenience when used properly.

All Abbatron test leads are supplied as a pair, one red and one black and in standard, four-foot lead lengths.

FIG	Part #	Meter End
A	623P	Standard Banana Plug
B	603P	Standard Phone Tip Plug
C	615P	Standard Alligator Clip with Boot
D	9325P	Shrouded Safety Banana Plug
E	625P	Right-Angle Phone Tip
F	685P	Right-Angle Standard Banana Plug

All of the safety designed plugs have fully shrouded insulation covering metal parts and are made to fit all popular safety input schemes. At the probe end, all Abbatron Test Leads feature a safety prod, which combines many safety features in an original Abbatron design:

- Prods are made of tough, flame-retardant ABS which resists deformation and cracking under the most severe service.
- Finger-grip grooves and a generous guard washer prevent accidental contact with live conductors.
- Prod tip is removable.
- The probe tip is unique in that it serves several purposes:
  - It is a precision .080” phone tip for insertion in standard tip jacks (page 26 and 27.)
  - It has a specially formed sharp tip for insulation piercing.
  - A special groove at the front lays over solid wires without slipping.
  - An 8-32 thread at the base allows attachment of standard adapters (such as alligator clips, please see page 9 for more), which maintain the integrity of insulation to the prod.

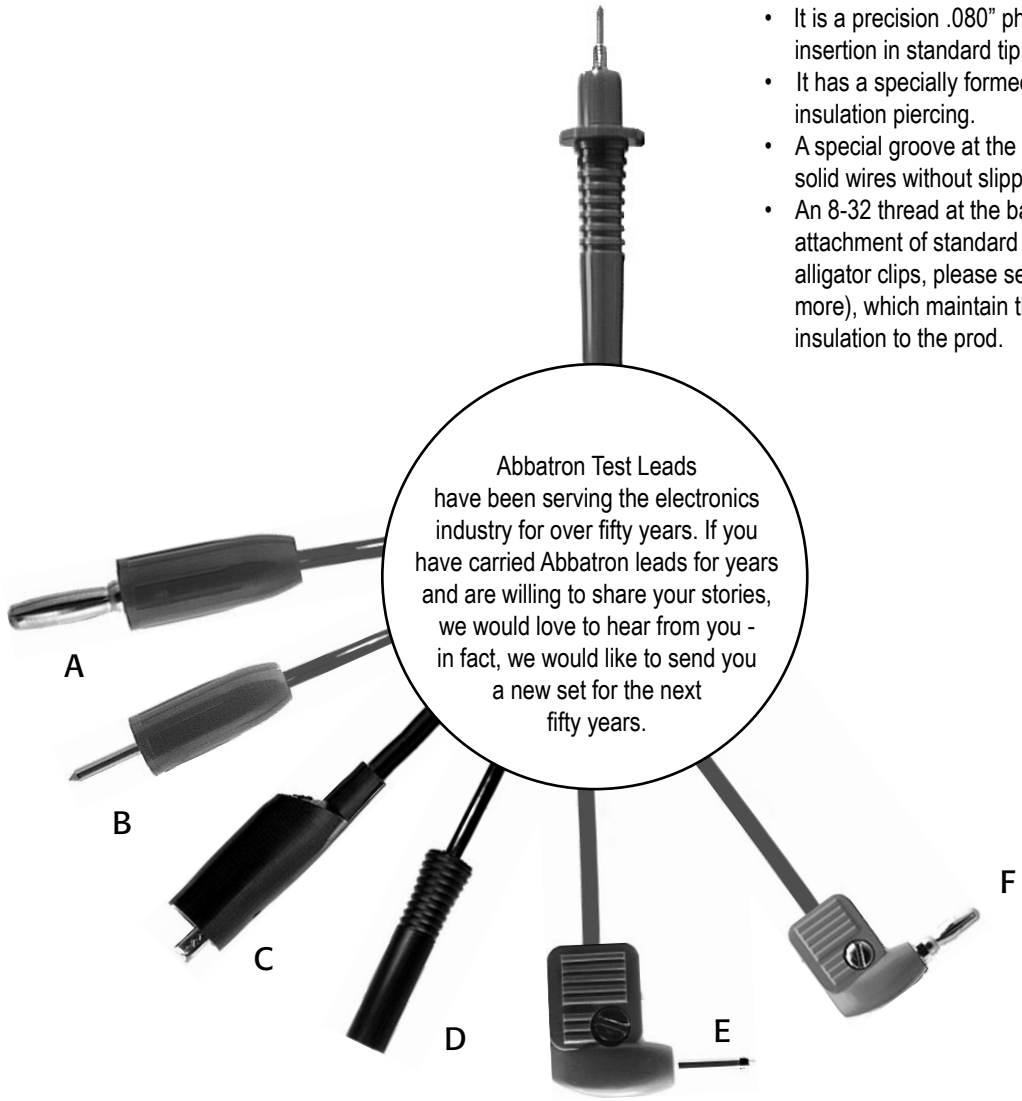

Abbatron Test Leads have been serving the electronics industry for over fifty years. If you have carried Abbatron leads for years and are willing to share your stories, we would love to hear from you - in fact, we would like to send you a new set for the next fifty years.

610P

Universal Test Lead Kit

- Banana plug test lead kit, with additional parts for universal attachment to various instrument input connectors. Adapters plug onto banana plug end.
- One pair of leads (one red and one black) and accessories are supplied in a handy folding vinyl pouch.
- Lead wire is #18 PVC insulated. It is extra-flexible and kink resistant. Nominal length is 48”.

PART NO.	DESC.	QTY.	ACCESSORIES
610P	Complete Kit	2	Alligator Clips
		2	Spade Lugs
		2	Phone Tips
623P	Repl. Leads	2	One red, one black

Test Lead Wire Specifications

AWG				RATINGS	
WIRE	INSULATION	O.D.	STRAND	VOLTAGE	CURRENT
#18	PVC	0.140"	65/35	10KV	10 AMP
#18	Rubber (Buna N)	0.140"	65/36	10KV	10 AMP
#20	Rubber	0.120"	26/34	5KV	8 AMP
#24	PVC	0.090"	19/36	5KV	5 AMP

Need something a little different? Abbatron can manufacture custom test leads designed to your specifications. Call your nearest Abbatron distributor or representative for details.

Interchangeable Tip Test Lead Kit

- An indispensable kit for every technician, laboratory, production control station and repair/service facility. A pair of ribbed safety-grip test prods are permanently fixed on one end. Meter ends and prods have modular connectors into which fit a complete assortment of instrument input accessories.
- One pair of leads (one red and one black) and accessories are supplied in a handy folding vinyl pouch.
- Lead wire is #18 PVC insulated. Nominal length is 48”.

699

PART NO.	DESC.	QTY.	ACCESSORIES
699	Complete Kit	2	Banana Plugs
		2	Alligator Clips
		2	Spade Lugs
		4	Phone Tips
		2	Needle Tips

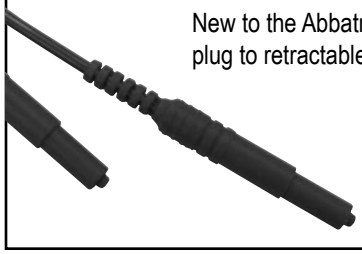

New to the Abbatron selection is this retractable shrouded banana plug. It is offered as a 48” retractable banana plug to retractable banana plug jumper.

1339-48

A standard gold plated banana plug is housed in a spring loaded Nylon 6/6 housing. This plug, developed for maximum safety, is available in red (-102) or black (-103). Please add color as suffix to part number.

Jumpers are common universal connection devices for measurement or testing. These connectors will offer solid, semi-permanent connections between instruments with a maximum of safety and reliability. They are, however, electrically noisy and may be unsafe at power voltage levels and should only be used for temporary connections. The preferred technique is to use a jumper with a connector matching the post jack or other terminal to which it is desired to connect.

*Please note that figures C, D, E and F are offered with an insulated handle (see G). All Jumpers shown here are supplied as either a pair, (one red, one black) or individually in red (-102) or black (-103). Please add color as suffix to part number.

PART NO.	FIG.	LENGTH INCHES	WIRE	INSULATION	UNIT
1596-12-	A	12	#18 AWG	PVC	One
1596-24-	A	24	#18 AWG	PVC	One
1596-36-	A	36	#18 AWG	PVC	One
1596-48-	A	48	#18 AWG	PVC	One
1596-60-	A	60	#18 AWG	PVC	One
629	A	12	#20 AWG	Rubber	Pair
657	A	24	#20 AWG	Rubber	Pair
658	A	36	#20 AWG	Rubber	Pair
659	A	48	#20 AWG	Rubber	Pair
1510-08-	B	8	#18 AWG	PVC	One
1510-12-	B	12	#18 AWG	PVC	One
1510-24-	B	24	#18 AWG	PVC	One
1510-36-	B	36	#18 AWG	PVC	One
627	C	48	#20 AWG	Rubber	Pair
628	D	48	#20 AWG	Rubber	Pair
647	E	48	#20 AWG	Rubber	Pair
604	F	12	#20 AWG	Rubber	Pair
605	F	24	#20 AWG	Rubber	Pair
606	F	36	#20 AWG	Rubber	Pair
607	F	48	#20 AWG	Rubber	Pair

PATCH CORD RATINGS

AWG WIRE	INSULATIONS	O.D.	STRAND	RATINGS VOLTAGE	RATINGS CURRENT
#18	PVC	0.140"	65/36	10KV	10 AMP
#18	Rubber (Buna N)	0.140"	65/36	10KV	10 AMP
#20	Rubber	0.120"	26/34	5KV	8 AMP
#24	PVC	0.090"	19/36	5KV	5 AMP

A
Standard Booted Alligator Clip at each end

B
Standard Stacking Banana Plug at each end

C
Alligator Clip to Stacking Tip Plug

D
Alligator Clip to Right Angle Tip Plug

E
Alligator Clip* to Right Angle Banana Plug

F
Alligator Clip* to Alligator Clip*

G
Insulated handle supplied with Figures C, D, E and F

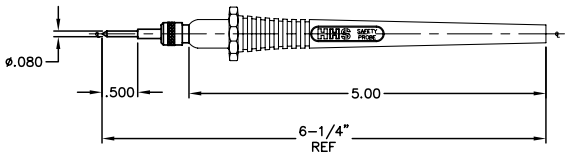

320

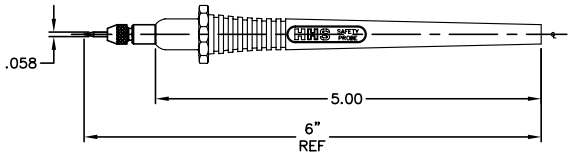

327

Test prod handles are offered in red (-102) or black (-103). Pleaseadd color as suffix to part number.

- Precision machined tips are nickel plated brass.
- Prods are made of tough, flame-retardant ABS which resists deformation and cracking under the most severe service.
- Finger-grip grooves and a generous guard washer prevent accidental contact with live conductors.
- Probe tip is removable for replacement purposes.

PART NO.	MATERIAL	TIP	WIRE CONNECTION
320	ABS	Threaded Replaceable	Solderless
327			Solder

Alligator Clips

A

B

C

PART NO.	STYLE	FIG.	MATERIAL	PLATING	LENGTH	BARREL O.D.	CONNECTION
300	Standard	A	Steel	Bright Tin	1-31/32	5/32	Solder or Banana Plug
350	Standard	B	Steel	Bright Tin	2	3/16	Screw. Solder or Banana Plug
331	Standard Boot	C	Rubber	-	2	9/32	Covers Standard Clips
389	Miniature Boot				1-3/8	7/32	Covers Medium Clips

Red and black color availability for part numbers 331 and 389.

Dual Instrument Test Adapters

1516

1676

210

1675

1516

- Shorting type adapter with dual banana jacks to dual banana plugs. Internal busbar shorted across line.
- ABS body contains banana jack holes for side stacking. Banana plug springs are Beryllium Copper. Standard 3/4" centers.

1676

- Dual banana plugs to dual banana jacks. Cable mount design.
- Turret terminal connections for permanent solder, wires or components.
- ABS body, banana springs are beryllium copper. 3/4" standard centers.

210

- Dual banana plugs to dual banana jacks. Cable mounted design.
- ABS body features ground polarity indicator. Internal set screws hold wire secure.

1675

- Dual banana plugs to dual banana jacks. 7/32" diameter cable mount design.
- Set screws secure leads to conductors.
- Standard 3/4" centers. ABS body, nickel plated beryllium copper springs.

Ratings

- Rated at 15 amps AC, for 10°C temperature rise, continuous duty, except where limited by coaxial connectors.
- 5KV, 60 cycle AC continuous working voltage, except where limited by coaxial connectors.
- Capacitance: 1.0 pf between conductors.
- Resistance: 1 Milliohm or less per conductor.

* **All adapters shown are available in red (-102) or black (-103).**

1682

1686

1687

1688

1689

1682

- Insulated dual binding posts to standard dual banana plugs.
- ABS body contains banana jack holes for side stacking. Banana plug springs are beryllium copper.
- Available in black body; one red, one black binding post head. Standard 3/4" centers.

1686

- BNC coaxial jack to dual banana plugs.
- ABS body contains banana jack holes for side stacking. Banana plug springs are beryllium copper.
- Available in black body; one red, one black binding post head. Standard 3/4" centers.

1687

- BNC coaxial plug to standard dual banana plugs.
- ABS body contains banana jack holes for side stacking.

  Standard 3/4" centers.

1688

- Insulated dual binding posts to male BNC coaxial connector. MIL UG-144/U style.
- ABS body contains banana jack holes for side stacking. Standard 3/4" centers.

1689

- Insulated dual binding posts to BNC coaxial jack.
- ABS body contains banana jack holes for side stacking. Available in black body; one red, one black binding post head. Standard 3/4" centers.

Ratings:

- Rated at 15 Amps AC, for 10°C temperature rise, continuous duty, except where limited by coaxial connectors.
- 5KV, 60 cycle AC continuous working voltage, except where limited by coaxial connectors.
- Capacitance: 1.0 pf between conductors.
- Resistance: 1 Milliohm or less per conductor.

A binding post is a versatile connector that allows a temporary or semi-permanent connection between electronic devices or circuits.

Construction Features:

The contact surface clamp washer, against which the wire or lug is clamped by the head, is an integral part of the stud and not a force-fitted separate washer. This avoids possible electrolytic corrosion across the mating faces due to current through the interface and subsequent increase in noise, galvanic EMF and resistance. The cross-hole is drilled at right angles to a key-flat on the clamp washer in the screw machine, assuring absolute angular alignment of the finished post to the keyed flat in the instrument panel. Press-on base washers can have as much as five or ten degrees of angular misalignment.

The behind-panel backup insulating washer is made of solid plastic, which reduces cost and increases insulation from flashover voltage of the post.

A flat metal washer is provided as a bearing surface for the nut against the backup washer. This washer can be used without the insulating backup washer, if it is desired, to ground the post to the panel.

All posts are shipped individually and unassembled in a sealed bag. This maintains the integrity of the part set, and also does away with the need to disassemble the post before assembling it on the panel.

TABLE A
BINDING POST RATINGS

All current ratings are 60 Hz RMS and are for 10°C temperature rise over ambient, long term. Voltage ratings are 60 Hz at sea level. Capacitance is to a 1/8" aluminum panel, component mounted as recommended. All ratings are working and do not represent maximum values.

STUD SIZE	CURRENT	VOLTAGE	CAPACITANCE
#4	5 AMPS	1 KV	2.5 pF
#6	15 AMPS	1 KV	3 pF
#8	15 AMPS	1 KV	4.5 pF
#10	30 AMPS	2 KV	5 pF

Connection Options:

1. Top insertion of banana plug.
2. Alligator clip inserted through top jack hole.
3. Spade lug positioned over stud and fastened by tightening the head.
4. Wire inserted through cross hole and held by head.
5. Standard .080" phone tip can be inserted in cross hole and held by head.
6. Wire wrapped around stud and fastened by tightening head.

Finishes:

MIL-Spec and certain other posts are supplied in gold plate in accordance with the requirements of the specifications. In all instances where gold is plated on brass, a barrier of Nickel is provided to prevent migration.

Excellent appearance and solderability are also provided by pure tin plating on alternative versions of these posts, with lower cost. This is a bright, acid tin, 99% pure, and NOT a solder plating.

Where solderability of the post is not a requirement, bright nickel plating is provided for maximum corrosion protection.

Plastic parts are provided with a low-luster, semi-matte finish for a modern appearance on contemporary instruments.

Material Specifications:

All binding posts are machined from solid brass. Mounting nuts and washers are also brass.

- **Brass**: Free-matching leaded brass, per QQ-B-626, Comp. 360, 1/2 hard.
- **Gold**: Gold plated, per MIL-G-45201, 5 micro-inch over 50 micro-inch hard nickel strike.
- **Nickel**: Nickel plate, per QQ-N-290, 200 micro-inch.
- **Tin**: Tin plate, per MIL-T-10727, 200 micro-inch Bright Acid Tin.

- Post head is molded Lexan polycarbonate, hex or fluted. Captivated to prevent loss.
- Body is brass with gold or tin plating as indicated.
- Insulated washers are molded polycarbonate and completely insulate post from panel. Keyed to panel and body to prevent rotation.
- Body mounts in 3/8" or 1/2" round or "D" hole for anti-rotation (see diagrams).
- Connects with .080" phone tip plug, 1/4" spade lug, standard banana plug, alligator clip or wire (to #14).
- To connect circuit, wrap wire around solder turret or attach to solder lug between nuts (lug not supplied).
- All posts shown here are available in standard red (-102) and black (-103). Other colors are available from factory. Please add color to part number as suffix.

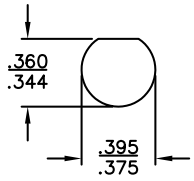

.375 Mounting Hole
For Figure C

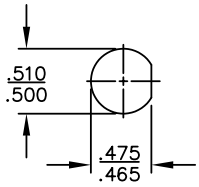

.500 Mounting Hole
For Figure A and B

PART NO.	FIG.	HEAD SHAPE	POST THREAD	PLATING
257	A	Hex	10-32	Gold
899				Tin
459	B	Fluted	10-32	Gold
799				Tin
1275	C	Fluted	6-32	Tin
1275N			8-32	
1517			6-32	Gold
1514			8-32	

Base Insulators:

Use these molded polycarbonate insulators to convert single posts to dual as indicated in table. Available in black.

PART NO.	MNTG HOLE DIA.	LENGTH	HEIGHT	CONVERTS
1814-5	3/8	1-7/32	5/32	1517
207-03	1/2	1-3/8	17/64	257

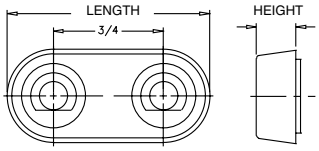

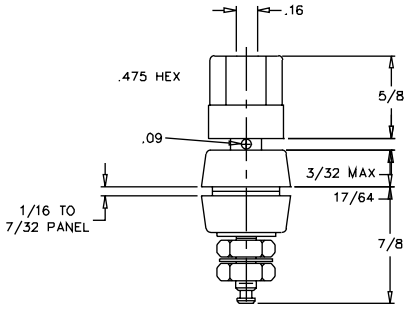

A

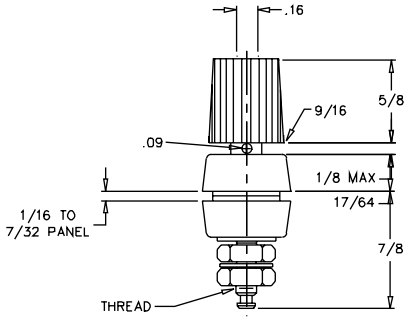

B

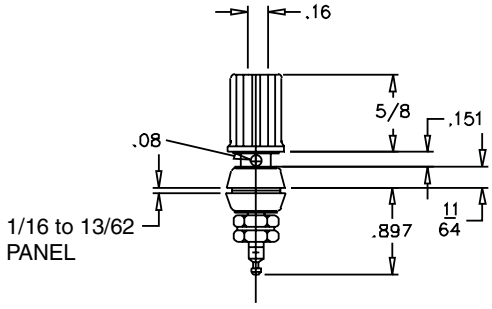

C

Insulated Binding Posts

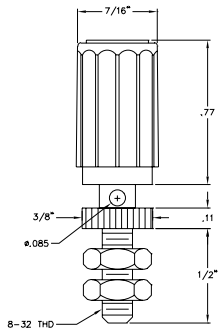

A

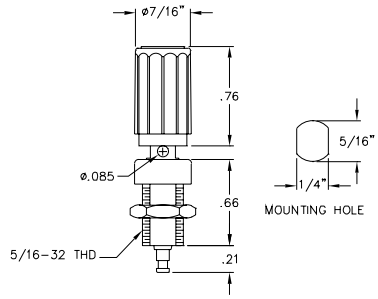

B

- Body is brass with nickel or tin plating as indicated.
- Body mounts as indicated in table.
- Connects with .080" phone tip plug, spade lug, standard banana plug, alligator clip or wire (to #14).
- To connect circuit, wrap wire around solder turret or attach to solder lug between nuts (lug not supplied).
- Please refer to Table A (page 12) for post rating information.
- All posts shown here are available in standard red (-102) and black (-103). Other colors are available from factory. Please add color to part number as suffix.

PART NO.	FIGURE	MNTG. HOLE	POST THREAD	WASHER	PLATING
1482	A	11/16	8-32	None	Nickel
1464	B	5/16 "D"	5/16 - 32	Insulating	Tin

Miniature Binding Posts

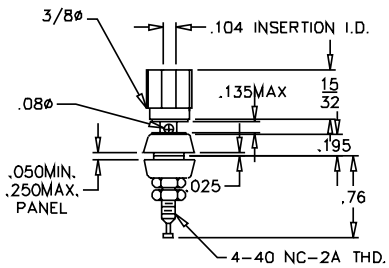

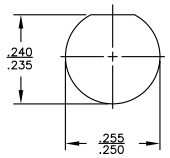

- Fluted post head is molded Lexan Polycarbonate with a gold plated brass insert.
- Body is brass with gold plating.
- Washers are molded nylon with a gold plated brass insert.
- Mounts in panel hole as indicated in table.
- Connects with .080" phone tip plug, spade lug, miniature banana plug, alligator clip or wire (to #18).
- To connect circuit, wrap wire around solder turret or attach to solder lug between nuts (lug not supplied).
- Please refer to Table A (page 12) for post rating information.
- Post is available in standard red (-102) and black (-103). Other colors are available from factory. Please add color to part number as suffix.

PART NO.	MNTG. HOLE	POST THREAD
3015	1/2	4-40

- Post heads are nickel plated brass.
- Bodies are machined brass with tin plating.
- Connects with .080” phone tip plug, 1/4" spade lug, standard banana plug, alligator clip or wire (to #14).
- To connect circuit, wrap wire around solder turret or attach to solder lug between nuts (lug not supplied).
- Please refer to Table A (page 12) for post rating information.

PART NO.	FIG.	MNTG. HOLE	POST THREAD	HEAD SHAPE
1835	A	1/2 "D"	10-32	Hex
137	B	#8	8-32	

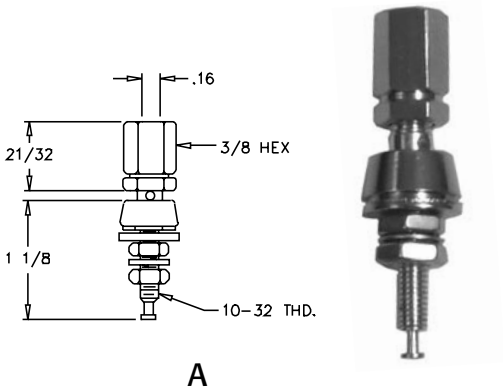

A

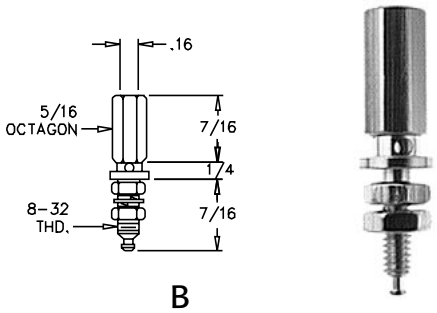

B

Abbatron Binding Posts Safety Features:

- Insulating material is high-temperature, flame-retardant polycarbonate, with a UL continuous-usage temperature of 220°F (110°C), and UL Flammability Rating of 94 V-O.
- Restricted head-opening prevents contact with live metal parts, even with the head screwed back down. Positive internal captivation does not allow the head to be removed, even with excessive torque.
- Recessed and insulated banana jack opening will not allow contact with the metal stud, even with the head screwed down. Abbatron recommends using the 289 style shrouded banana plug for the highest possible safety level.
- Positive, double-keyed insulating washers prevent rotation of the stud or body when tightened into a keyed panel hole.

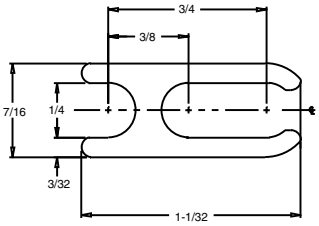

1828

Shorting Link:

- Constructed of spring brass with nickel plating.
- Rated at 20 Amps.
- Fits 269 style posts (page 16).

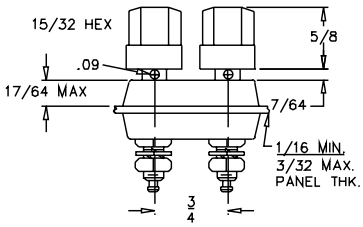

A

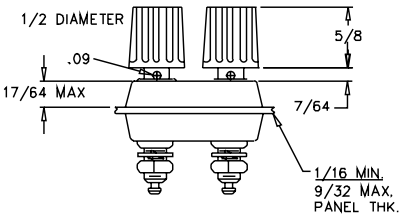

B

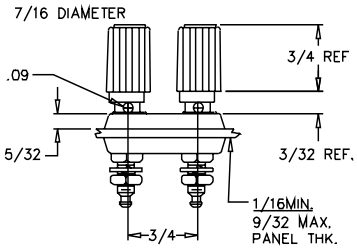

C

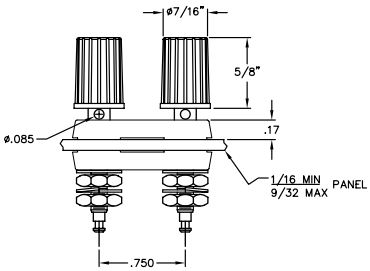

D

- Fluted or hex insulated post heads are molded Lexan polycarbonate. Captivated to prevent loss.
- Body is brass with tin plating.
- Insulated washers are molded polycarbonate and completely insulate post from panel. Keyed to panel and body to prevent rotation.
- Body mounts into dual holes with 3/4” centers.
- Connects with .080” phone tip plug, 1/4" spade lug, standard banana plug, alligator clip, wire (to #14) and shorting links.
- To connect circuit, wrap wire around solder turret or attach to solder lug between nuts (lug not supplied).
- Please refer to Table A (page 12) for ratings.
- All posts shown are available as black, red or red and black in the table.

PART NO.	FIG.	MNTG. HOLE	POST THREAD	HEAD SHAPE	HEAD COLORS
269BB	A	1/2	10-32	Hex	Black - Black
269RB					Red - Black
269RR					Red - Red
1813BB	B			Fluted	Black - Black
1813RB					Red - Black
1813RR					Red - Red
1477BB	C	3/8	6-32		Black - Black
1477RB					Red - Black
1477RR					Red - Red
1814BB	D				Black - Black
1814RB					Red - Black
1814RR					Red - Red
1809BB			8-32		Black - Black
1809RB					Red - Black
1809RR					Red - Red

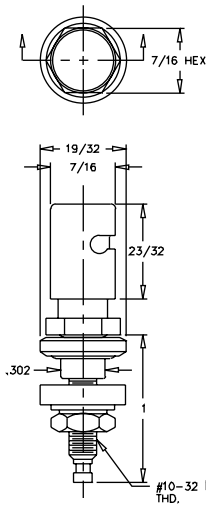

1837

- ML-P-55149/8 commercial version, this heavy duty, waterproof post is meant for rugged applications.
- Body is nickel plated brass.
- Insulated washers are molded nylon. Cap is silicon rubber, as are “O” ring waterproof seals for panel.
- Body mounts into 5/16” hole in panel from 1/16” to 1/8” thick.
- Spring loaded push cap tightly grips wire in side slot.
- To connect circuit, wrap wire around solder turret or attach to solder lug between nuts (lug not supplied).
- Please refer to Table A (page 12) for post rating information.
- Available in red (-102, MIL Spec Type PB 08NA02) or black (-103, MIL Spec Type PB 08NA01).

PART NO.	FIG.	MNTG HOLE	POST THREAD	STUD LENGTH	PLATING
1837-	A	5/16	10-32	1	Nickel
1839-	B	9/32	6-32	5/8	

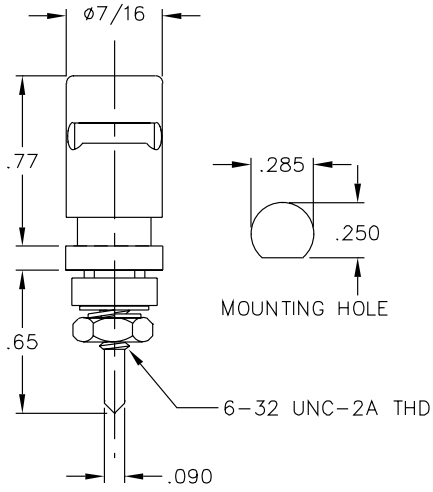

1839

- High retention spring loaded binding post.
- 70 lb/in spring compression rate.
- Based on MIL-P-55149/10.
- Waterproof to 1m.
- Top insulating washer is over-molded on the post.
- Anti-rotational design.
- Nickel finish.
- Spring loaded push cap tightly grips wire in slot.
- Available in red (-102) or black (-103).

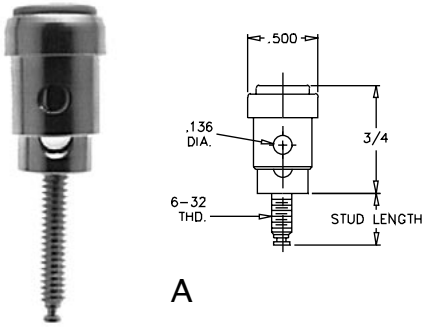

A

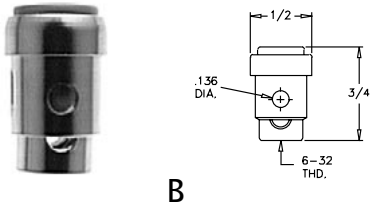

B

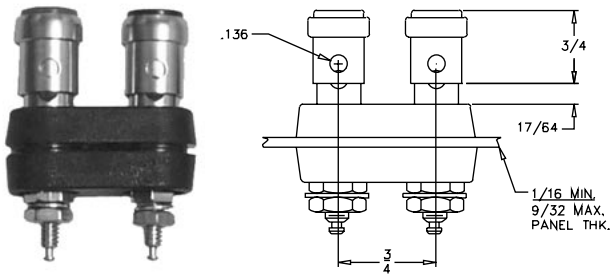

C

PART NO.	FIG.	MNTG. HOLE	POST THREAD	STUD LENGTH	PLATING
2802	A	#6	6-32	3/8	Nickel
2803				1/2	
2804				3/4	
2809	B			6-32 THD	
2713BB	C	1/2	8-32	1/16 MIN 9/32 MAX PANEL THKNS	
2713RB					
2713RR					

- Quick and secure wire connection is assured with these spring loaded binding posts.
- Heads and bodies are brass with plated finish as indicated above. Insulated caps on heads are available in red (-102) or black (-103) or for the Dual posts, a combination (RR, RB, BB). Please add color as suffix to part number.
- Posts mount into #6 holes. Dual posts require standard 3/4" centers.
- Use with phone tip plug up to 1/8" diameter or connect to wire up to #12 AWG.
- To connect circuit, wrap wire around solder turret or attach to solder lug between nuts (lug not supplied).
- Please refer to Table A (page 12) for post rating information.

- Where only a simple, grounded, single-wire connection is to be made to a panel or chassis, these metal compression type posts are recommended.
- Parts in diagram B and C connect with .080” phone tip plug, standard banana plug and wire (to #14).

PART NO.	FIGURE	MOUNTING HOLE	MOUNTING THREAD
110	A	#8	8-32 Screw
159	B	#6	6-32 Thread
136	C	#6	6-32 Thread

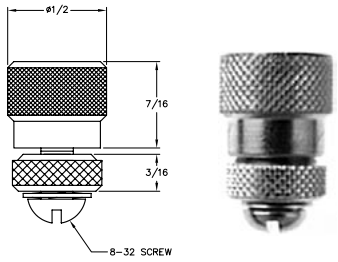

A

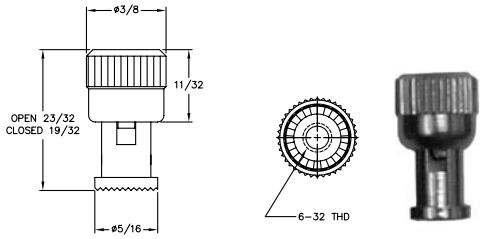

B

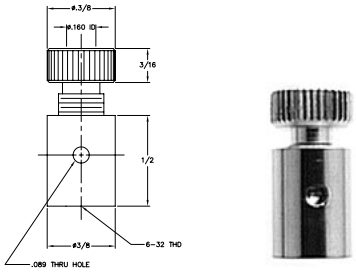

C

Design & Application Features:

Where only a simple, grounded, single wire connection is to be made to a panel or chassis, the metal compression type posts are recommended (part numbers 159,136).

Where a grounded connection is required, but a variety of plugs, tips or wires may be used, the metal-head, multiple-use binding posts are ideal. The hex styles offer a variety of sizes and current ranges (part numbers 1835 and 137).

For lowest cost in insulated binding posts, fluted head posts are the choice (part number 1464). The thread is molded as an integral part of the head, thus reducing cost but maintaining quality. Versions are offered to ground the post directly to the panel or to fully insulate the post.

Our premium quality insulated binding posts feature brass threaded inserts in the head, separable washer construction and a variety of head styles, stud sizes, mounting space requirements and metal finishes.

High current posts are available in both hex and fluted heads, whereas the thinner styles offer narrow fluted heads for space efficiency (part numbers 257, 1517 and 459). Both of these types are made in military specifications style in the gold plated versions. Tin plated posts have all the features of the MIL-Spec posts with the bright solderable pure tin plating for greater economy.

A subminiature post is offered to fit miniature banana plugs and miniature alligator clips and spade lugs (part number 3015).

The line of dual binding posts offer all features and economies of the single posts but with the added convenience of pre-mounting on exact 3/4" or 1/2" centers on a common panel insulator (part numbers 269, 1477, 1813 and 1814).

Type	SPECS	CONTINUOUS TEMPERATURE	FLAMMABILITY RATING - UL
Nylon Type 6/6	ASTM-D4066	185 F	94 V-2
Polycarbonate	UL-94	220 F	94 V-0
A.B.S.	L-P-1183	160 F	94HB
Phenolic	-	220 F	94HB

Standard Insulated Banana Plugs

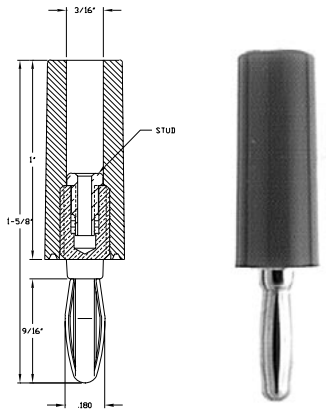

A

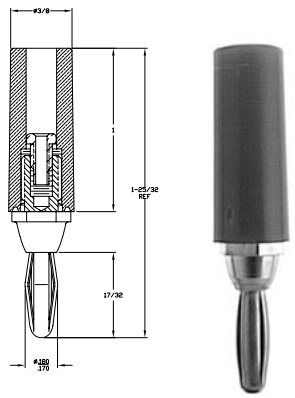

B

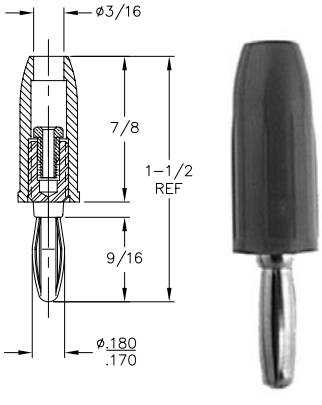

C

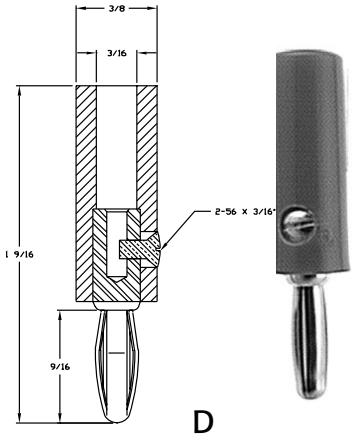

D

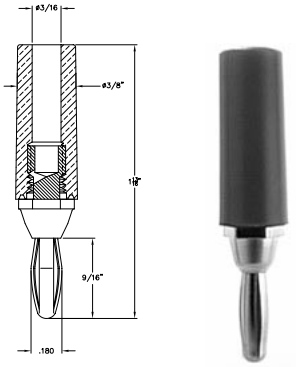

E

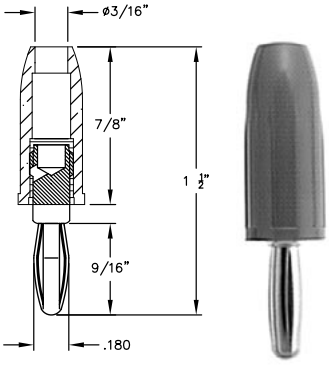

F

- Banana plug bodies are nickel plated brass with beryllium copper springs.
- Handles are molded plastic as indicated in table.
- Available in red (-102) and black (-103) as standard colors. Other colors are available upon request.

PART NO.	ILLUS.	TYPE	HANDLE	WIRING	RATING
211	A	Standard	Nylon	Stud or Well	15 Amps - 1KV
212	B				
476	C		Polycarbonate		
204	D		Nylon	Side Screw	
295	E			Solderless	
455	F		Polycarbonate		

289
Shrouded Safety Banana Plug

- Brass body has beryllium copper caged spring and is gold plated.
- Housing is molded nylon type 6/6.
- Plug is supplied unassembled for immediate application. Available in red (-102) or black (-103).

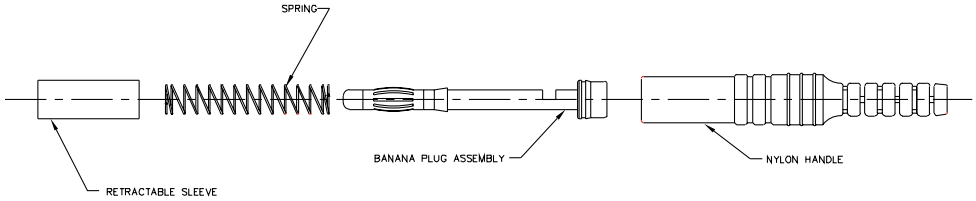

289

- Each plug shown below has a special feature and each is machined from brass and is nickel plated. Insulating material is indicated in table.
- Available in red (-102) or black (-103). Please add color as suffix to part number.

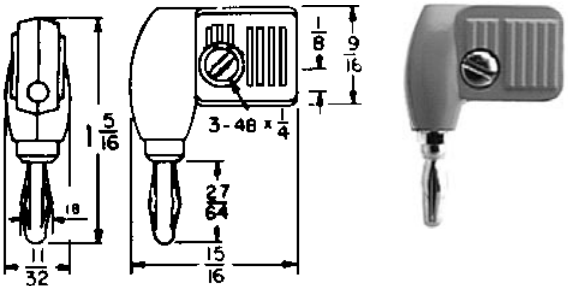

A

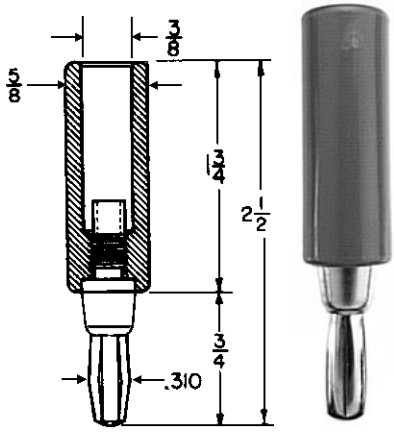

B

PART NO.	ILLUS.	TYPE	HANDLE	WIRING	RATING
255	A	Right Angle	ABS	Solder Well	10 Amps - 1KV
285	B	Giant	Nylon	Solder Well	25 Amps - 2KV

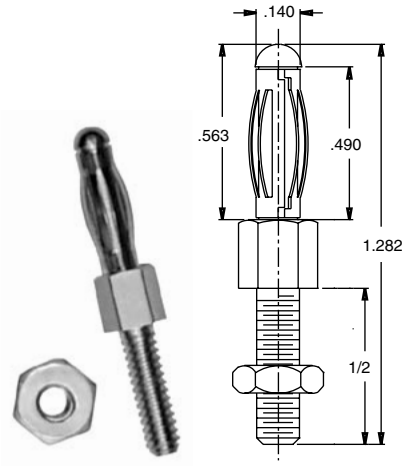

425

425
Caged Spring Banana Plug

- Body is precision machined from brass and nickel plated. Hardware included.
- Caged springs are made from beryllium copper and are nickel plated.
- Also available with gold plating (# 425AA).

This caged spring banana plug features nine 'leaves' for greater contact during use. It is designed with a 6-32 threaded post for ease of assembly.

Uninsulated banana plugs have nickel plated brass bodies with nickel plated beryllium copper springs. All plugs shown here feature a male threaded stud as indicated in table.

Hardware is included (except with part 192).

PART NO.	FIG.	TYPE	STUD		AMPS
			THREAD	LENGTH	AC
192	A	Mini.	2-56	17/64	5
460	B	Short	4-40	3/8	10
462			6-32		
401	C	Standard			15
103				1/2	
102	D			3/8	
432				1/2	
145	E		1/4-32	11/32	
100	F		6-32	29/32	

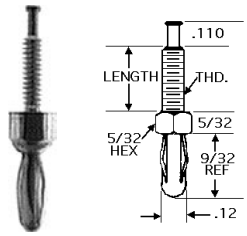

A

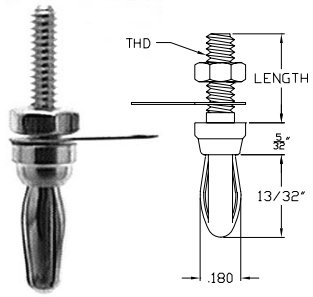

B

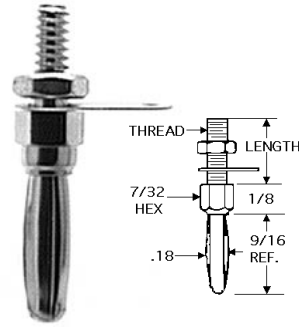

C

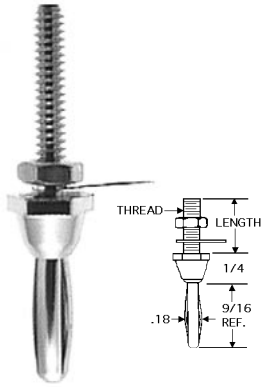

D

E

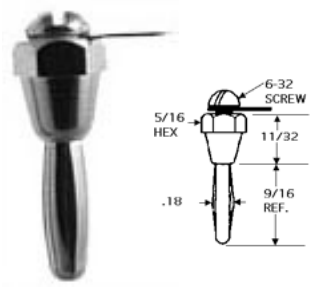

F

PART NO.	FIG.	STUD		AMPS
		THREAD	LENGTH	AC
185	A	1/4-28	13/32	25
186	B	10-32	Hole	25

- Giant uninsulated banana plugs and machined brass bodies with nickel plating and beryllium copper springs that are also nickel plated.
- Supplied with lug and screw as shown. Solder wire to lug between nut and panel.
- Fits 286 style giant insulated banana jack or style 157 giant uninsulated banana jack (page 24).
- Rated at 25 Amps AC

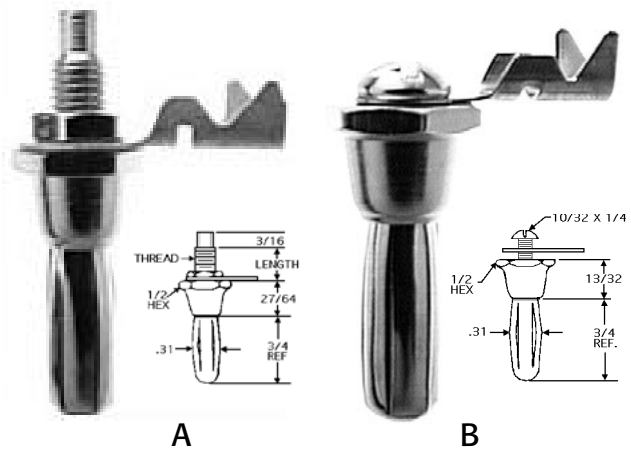

A B

Insulated Banana Jacks

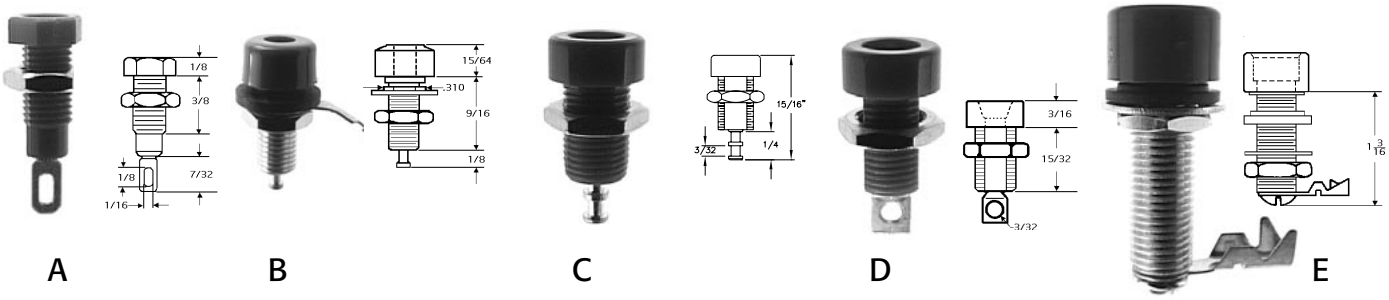

A B C D E

- Metal body jacks are nickel plated brass.
- Jacks mount and are insulated from panel in 5/16" holes. Metal body jacks can be conductive-to-panel mounted in 1/4" holes. All are held with nut supplied.
- Available in red (-102) or black (-103) as standard, call for other colors.
- Wire wraps and solders around turret or through hole in interior contact. Wire can be soldered to lug supplied on metal body jacks.
- Rated at 15 Amps AC for 10°C temperature rise, continuous duty. Voltage 1 KVAC.

PART NO.	FIG.	TYPE	HEAD DIA.	HEAD HEIGHT	BODY LENGTH	THREAD	I.D.	INSULATING MATERIAL
1458	A	Miniature, All Insul.	5/16	1/8	5/8	1/4-32	.104	Polycarbonate
205	B	Standard, Metal Body	7/16	15/64	9/16		.161	Nylon
1499	C	Standard, All Insul., "D" Body		3/16	15/32	5/16-32		Polycarbonate
1509	D							
286	E	Giant	5/8	3/8	13/16	3/8-24	9/32	Nylon

Insulated Banana Jacks

In-line Banana Jack

- This fully insulated banana jack is designed for secure cable mount via solder or crimp assembly.
- The machined brass body is tin plated for maximum ease of lead-free solderability. This banana jack is fully insulated with nylon 6/6 cap and handle; available in red and black.
- This design is suitable for test lead or patch cord extension where long leads are required. Accepts standard banana plugs.
- Rating: 15 AMPS AC for 10 (degrees symbol) C continuous temperature rise, continuous duty. Voltage 1KVAC.

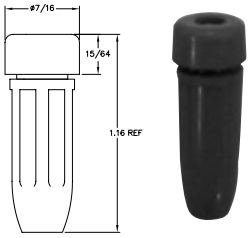

PART NO.	TYPE	HEAD DIA.	HEAD HEIGHT	BODY LENGTH	THREAD	I.D.	INSULATING MATERIAL
251	In-Line	7/16	15/64	29/32	1/4-32	.161	Nylon

Uninsulated Banana Jacks

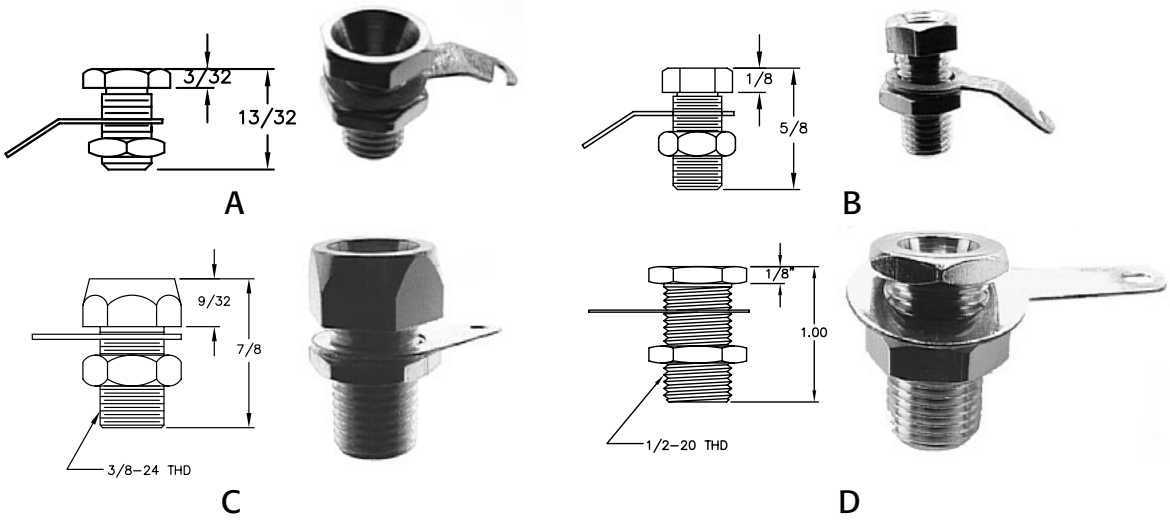

- Threaded bodies are machined from brass and nickel plated.
- Body is held to panel with nut. Wire solders to lug between nut and panel. Hardware included.

PART NO.	ILLUS.	TYPE	HEAD DIA.	HEAD HEIGHT	BODY LENGTH	THD.	I.D.
101	A	Standard	3/8	3/32	13/32	1/4-32	.161
109	B	Standard	5/16	1/8	1/2	1/4-32	.161
187	C	Giant	1/2	9/32	19/32	3/8-24	.275
157	D	Giant	5/8	1/5	7/8	1/2-20	.275

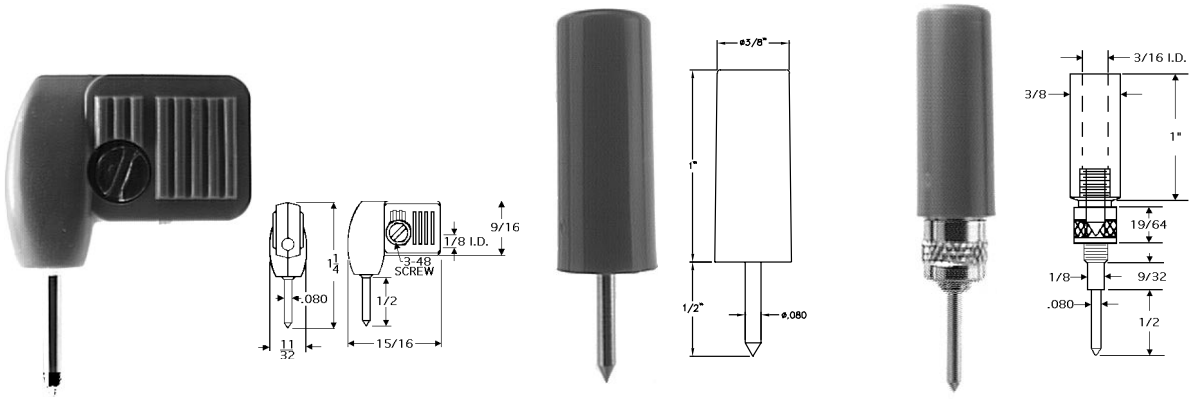

A B C

Insulated Phone Tip Plugs

- Body is brass with nickel plating. Handle is molded plastic as indicated in table.
- Colors: All of the above plugs are offered in standard -102 red or -103 black. Add color as suffix to part number. Other colors such as white, yellow, green and blue are available by special order.
- Please see pages 6 and 8 for jumpers or test leads using these plugs and page 9 for test prods. Need something similar but different? We have or can make what you need to get the job done.

PART NO.	FIG.	TYPE	HANDLE MATERIAL	AMPS	VOLTS
235	A	RA Solder	ABS	12	1 KV
203	B	Solder	Nylon	12	1 KV
200	C	Solderless	Nylon	12	1 KV

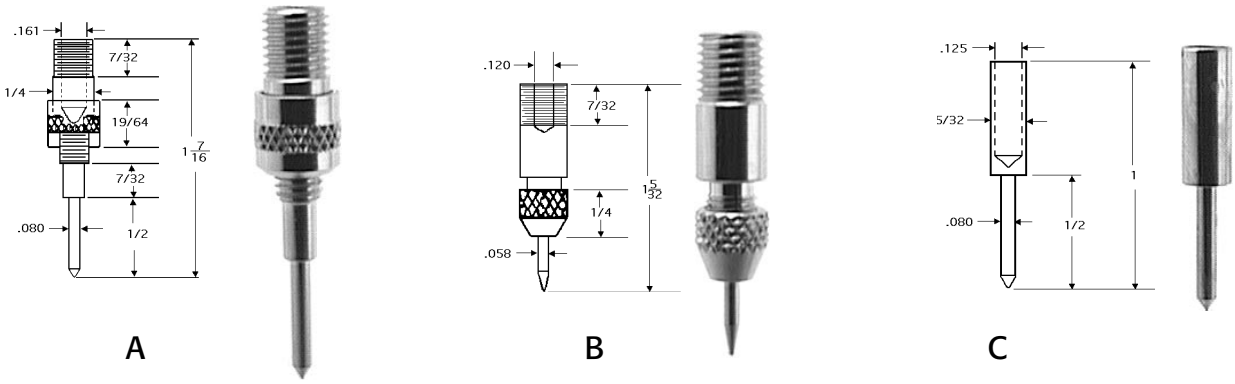

A B C

Uninsulated Phone Tip Plugs

- Brass body with nickel plating.
- Needle tips are nickel plated steel.
- Wire leads solder into well in back of plug. On solderless types, wire fits through hole in body, wraps around screw portion and is held with knurled collar.
- Rated at 12 Amps AC for 10°C temperature rise, continuous duty.

PART NO.	FIG.	TYPE	MOUNTING	STYLE
124	A	Solderless	Threaded	Long tip
128	B	Solder	Threaded	Replaceable needle tip
108	C	Solder	Wire Mnt.	Earphone tip, machined

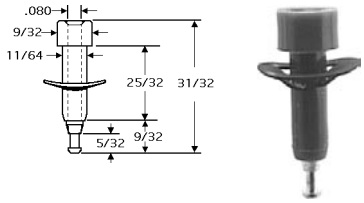

A

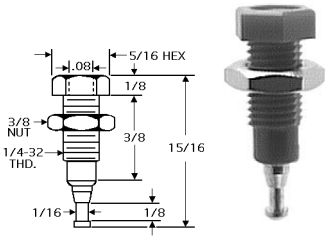

B

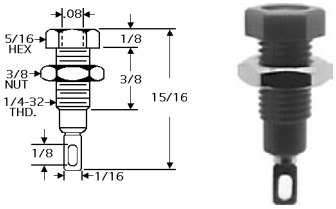

C

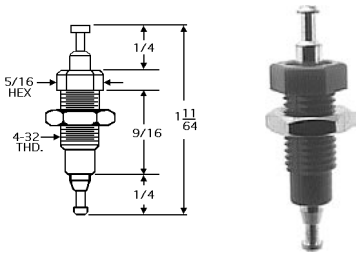

D

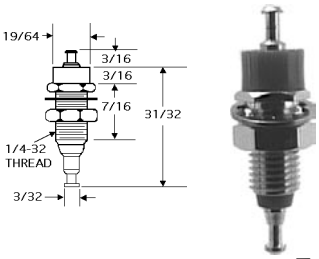

E

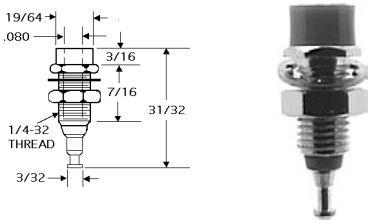

F

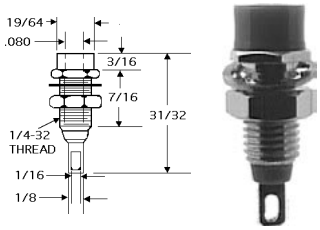

G

- Mounts in panel hole as indicated, with hardware supplied for fully insulated mounting.
- Wire lead solders to contact lug or wraps and solders to turret.
- Rated at 10 Amps AC for 10°C temperature rise, continuous duty. Voltage, capacitance ratings per table.
- Available in red (-102) or black (-103) as standard colors. Call for other colors.

PART NO.	ILLUS.	TYPE	MOUNTING HOLE	RATINGS	
				VOLTAGE	CAPACITY
1598	A	All insulated, Quick Mounting	3/16	1 KV	4.0 pf
1505	B	All insulated, Turret Terminal	1/4	2 KV	3.0 pf
1506	C	All insulated, Eyelet Terminal			
1507	D	All insulated, Feed-Thru Brass Turret			
1503	E	Insulated Body, Metal Shell, Feed-Thru			10.0 pf
3501	F	Insulated Body, Metal Shell, Turret Terminal MIL Version Per MIL-C-39024/10			
3502		Insulated Body, Metal Shell, Eyelet Terminal MIL Version Per MIL-C-39024/10			

Uninsulated Tip Jacks

- Brass body with nickel plating.
- Phosphorus bronze contact.
- Mounts in a .250” hole in panels up to 0.375” thick, with nut supplied.
- Wire lead solders to lug on jack.
- Rated at 15 Amps AC for 10°C temperature rise, continuous duty.

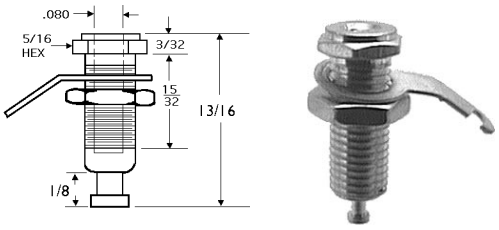

107

Printed Circuit Test Jacks

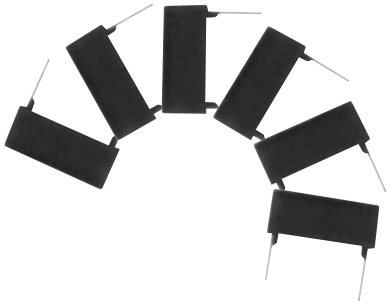

- Description: Double entry design, probe inserts at either end of jack. Accepts probes no larger than .084”, contacts down to .074”. Closed bottom construction keeps jack from fouling with solder or flux. Locking ears hold jack firmly to board until soldered. Precise dimensions allow automated assembly to boards.
- Body is molded nylon per MIL-P-20693.
- Beryllium copper spring.
- Mounts into .052” holes.
- Data: Insertion force: 30 oz. max.
  Withdraw force: 8 oz. min with .080” probe.
- Ratings: Operating voltage is 1500 volts, 60 CPS RMS sea level. 350 volts, 60CPS RMS at 50,000 feet. 5 Amp AC max. current rating.
- Contact resistance: 20 Millivolt drop maximum at specified current at 25°C.
- Color: add color number as suffix to part number:
  -101 White -102 Red
  -103 Black -104 Green
  -105 Blue -107 Yellow

- This part is similar to MIL-C-39024/11A. Other contact finishes are available as special order in quantity from the factory.

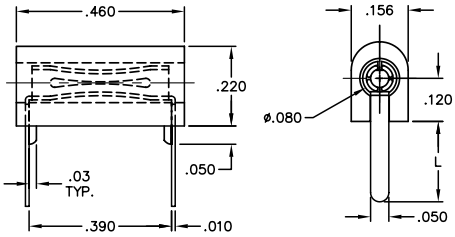

A

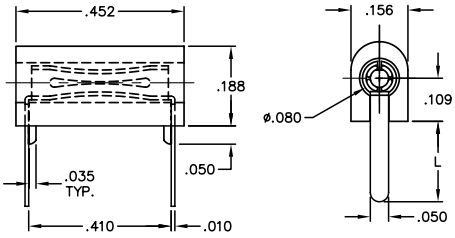

B

PART NO.	ILLUS.	LENGTH	FINISH	BOARD THKNS.
325	A	0.130	Gold	1/16
321		0.219	Gold	1/8
430	B	0.203	Gold	3/19

Coaxial Antenna Connectors

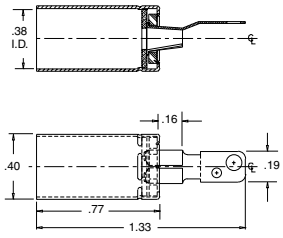

1235
Coaxial Antenna Jack

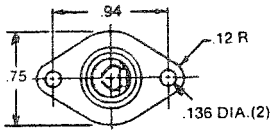

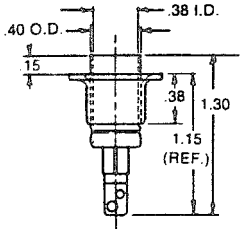

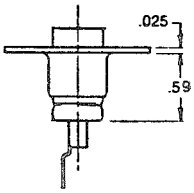

1207
Coaxial Antenna Jack

Connectors

Receptacles

AA

- Power outlet is for use on a variety of small appliances and electronic equipment. Are black, general purpose phenolic.
- Black and white 6” wire leads are stripped 1/2” for convenience and have green ground wire.
- UL and CSA approved.
- Rated at 15 Amps, 125 Volts AC.

PART NO.	PANEL CUTOUT	TERMINAL TYPE	POLARIZED
1280-103	AA	6" Wire Leads	Yes, with ground

All lugs are electro-tin plated steel.
Strip material: flame retardant phenolic, .062” thk.
Lug spacing: 3/8” standard, 1/4” miniature.
Strip width: 3/8” standard, 5/16” miniature.
Mounting hole: .140” ID Standard, .096” ID mini. mounting
Screw: #6 standard, #3 or 3/32” rivet Mini.

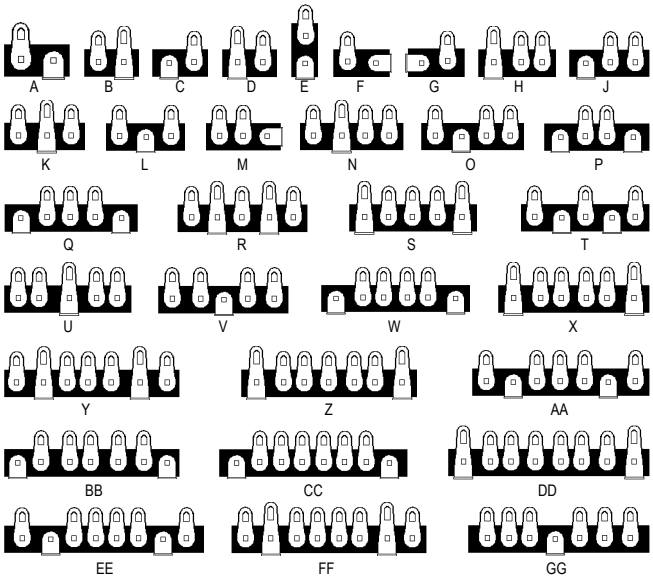

STANDARD PART NO.	MINIATURE PART NO.	FIG.	No. of Terminals Insulated	No. of Terminals Grounded
861		A	1	-
862	1062	B	1	1
813		C	1	-
820	1004	D	1	1
849		E	1	-
828		F	1	-
821		G	1	-
830	1055	H	2	1
829		J	2	-
864	1064	K	2	-
863		L	2	1
846		M	2	-
850	1074	N	3	-
857		O	3	1
867		P	2	-
853		Q	3	-
868	1068	R	3	1
847	1071	S	3	-
865		T	3	-
866	1066	U	4	1
855		V	4	-
869		W	4	-
854	1076	X	4	1
879	1158	Y	7	-
859	1156	Z	5	-
871		AA	5	1
860	1060	BB	5	-
848		CC	6	-
900	1075	DD	6	1
858		EE	6	-
870	1070	FF	6	-
901	-	GG	6	1

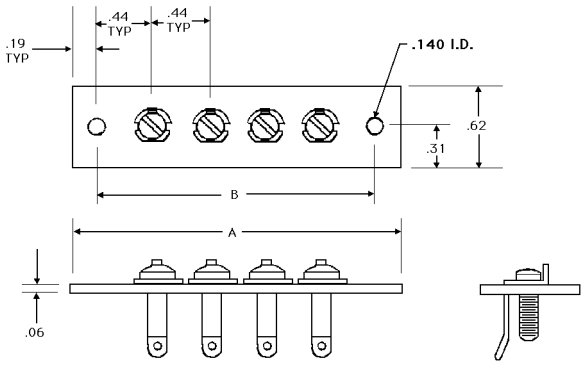

Boards are 1/16” thick laminated phenolic.
Terminals are 1/32” brass or steel, bright tin plated.
Screws are steel, zinc or bright tin plated.
Hardware, alternative dimensions, materials or finishes are available upon request.

PART NO.	QTY. LUGS	DIM A	DIM. B
914	1	1.25	.87
872	2	1.69	1.31
873	3	2.12	1.75
874	4	2.56	2.19
875	5	3.00	2.62
876	6	3.44	3.06
877	7	3.87	3.5
928	8	4.31	3.94
929	9	4.75	4.37
930	10	5.19	4.82

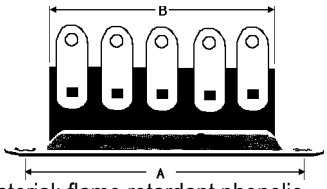

Strip material: flame retardant phenolic.
Lugs: steel, electro-tin plated, 5/16” centers.
Mounting holes for #6 screws, electro-tin plated base.

PART NO.	NO. TERMINALS	MNTG. CTRS. A	LENGTH B
3002	2	1	.67
3003	3	1-5/16	.99
3004	4	1-5/8	1.30
3005	5	1-15/16	1.61
3006	6	2-1/4	1.92
3007	7	2-9/16	2.24
3008	8	2-7/8	2.55
3009	9	3-3/16	2.86
3010	10	3-1/2	3.17
3011	11	3-13/16	3.49
3012	12	4-1/8	3.80
3013	13	4-7/16	4.11

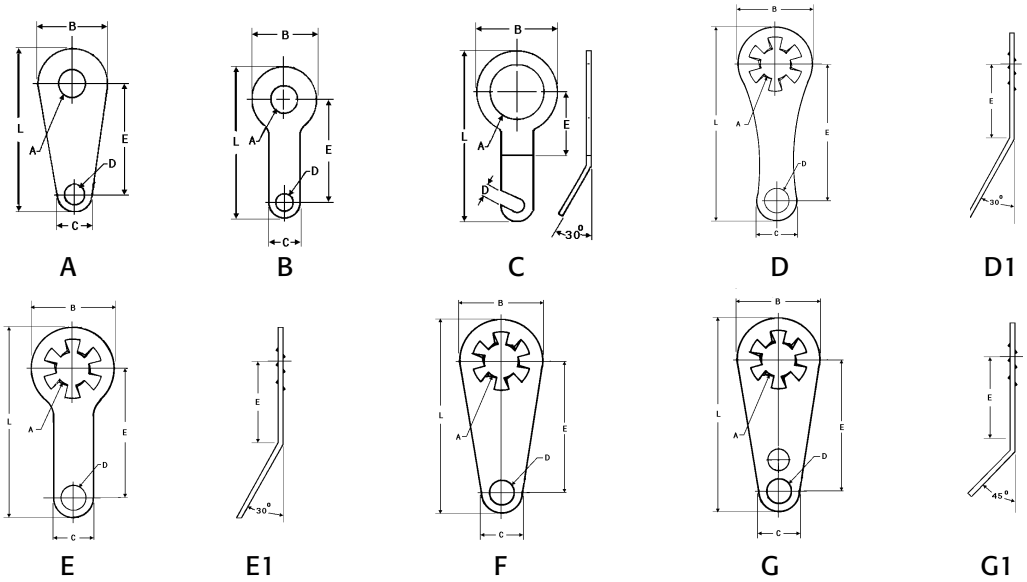

- Made of brass material.
- Tin finish
- Bent lugs have the same configuration as the flat lug shown in the adjacent drawing, with the bend details as shown.

PART NO.	ILLUS	STUD SIZE A	LENGTH L	THKNS.	O.D. B	WIDTH C	HOLE D	CNTR E
1485-6	A	#6	9/16	.010	9/16	3/16	1/16	5/16
1485-8		#8						
1485-10		#10						
1497		3/8	25/64	.016	7/8	7/32	5/64	1/2
1488-4	B	#4	9/16	.010	1/4	5/32	1/16	23/64
1488-6		#6						
1488-8		#8		.020	5/16	3/16	3/32	5/16
1496	C	1/4	25/32		3/8	5/32	1/16	19/64
1410-4	D	#4	7/8	.018	5/16	11/64	3/32	5/8
1410-6		#6						
1410-8		#8						
1410-10		#10	57/64		11/32			
1410-14		1/4	13/16		7/16	3/16		1/2
1414-4	D1	#4			5/16	11/64		17/64
1414-6		#6						
1414-8		#8						
1414-10		#10	53/64		11/32			
1411-4	E	#4	47/64		5/16	5/32		17/32
1411-6		#6						
1411-8		#8						
1415-4	E1	#4	23/32					7/32
1415-6		#6						
1415-8		#8						
1412-4	F	#4	5/8			3/16		3/8
1412-6		#6						
1412-8		#8						
1413-4	G	#4	23/32					15/32
1413-6		#6						
1413-8		#8						
1416-4	G1	#4	41/64					1/4
1416-6		#6						
1416-8		#8						

- Nominal dimensions are indicated. Inner diameter is clearance for screw size shown. Others are +/- 1/64".
- Alternative sizes, materials or finishes may be obtained in quantity as special order.
- Nylon 6/6 washers are offered in natural milky white color.

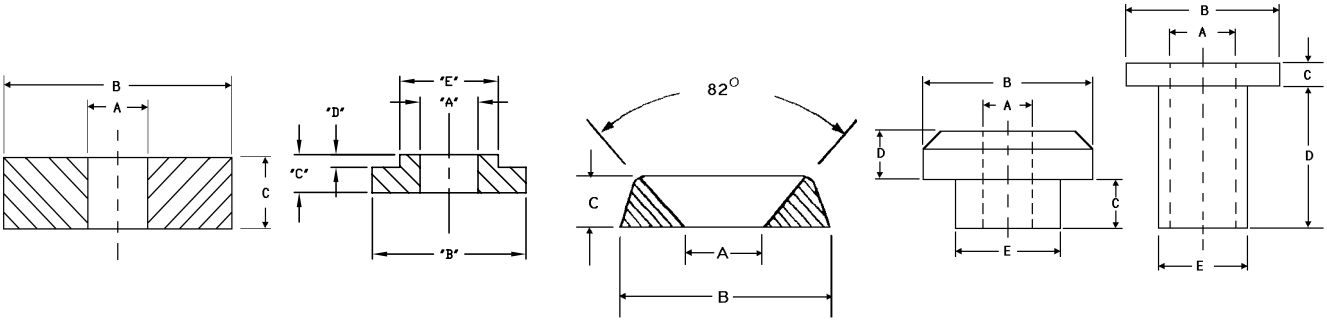

A B C D E

PART NO.	FIG.	SCREW CLEAR	MAT.	ID A	OD B	THKNS C	HT. D	DIA. E	PART NO.	FIG.	SCREW CLEAR	MAT.	ID A	OD B	THKNS C	HT. D	DIA. E
2652	A	#2	Nylon	3/32	1/4	1/32	1/32		2666	B	#10	Nylon	13/64	3/8	3/32	1/32	5/16
2671						1/16	1/16		2664		1/4		1/4	1/2			
2514		#4		1/8	9/32	3/54	3/54		2669		17/64		17/64				3/8
2670		#6		9/64	1/4	1/16	1/16		2668		3/8		3/8	5/8			1/2
2515					5/16	3/64	3/64		2667					3/4		1/16	
2672						1/16	1/16		2687	C	#6		9/64	7/16		3/32	-
2673		#8		11/64	3/8				2688		#8		11/64	33/64	7/64	7/64	
2674		#10		13/64					2689		#10		13/64	37/64	9/64	9/64	
2518		1/4		1/4	5/8				2690		17/64		15/64	39/64	5/32	5/32	
2675					1/2				2691				1/4	43/64	3/16	3/16	
2676						3/32	3/32		2681	D	3/8		1/8	9/32	0.04	0.04	3/16
2677		5/16		5/16	5/16	1/16	1/16		2682				9/64	21/64			7/32
2679		3/8		3/8	3/4				2683		#8		11/64	3/8	0.05	0.05	1/4
2678					5/8				2684		#10		13/64	7/16			9/32
2517		#10		13/64	7/16				2685		1/4		1/4	9/16	0.06	0.06	3/8
2651	B	#2		3/32	1/4	.055	.025	5/32	2686		3/8		3/8	3/4			1/2
2661		#4		1/8	17/54	1/16	1/32	3/16	2534	E	#4		7/64	15/64	1/4	1/4	9/64
2662		#6		9/64	1/4	3/32			2535		#6		9/64	19/64			11/64
2663					5/16				2536		#8		11/64	11/32	3/8	3/8	13/64
2660					3/8			1/4	2537		#10		13/64	13/32			17/64
2665		#8		11/64					2538		1/4		17/64	13/64			5/16

Grommets

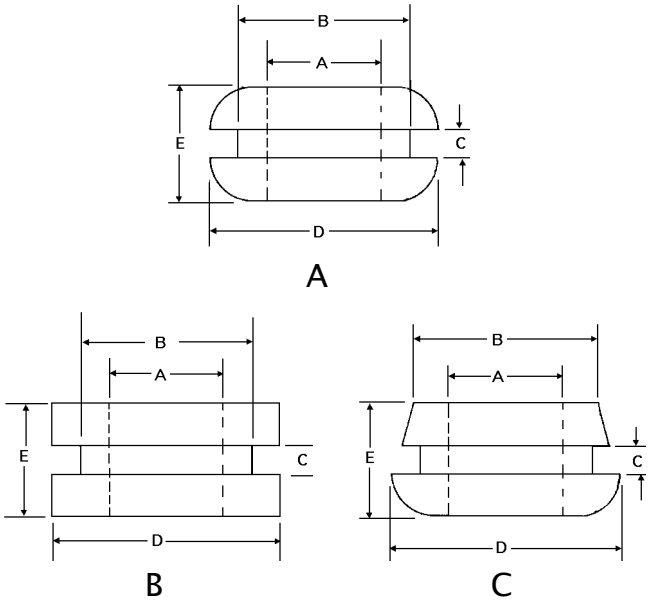

Alternative sizes and shapes are available in quantity from factory. Call for details.

PART	ILLUS.	INSIDE DIA.	MNTG. HOLE	CHASSIS THKNS.	O.D.	THKNS.
		A	B	C	D	E
2185	A	1/8	3/16	1/16	5/16	3/16
91114			1/4		11/32	
2058		5/32			3/8	
2172		3/16	5/16		7/16	7/32
91103			7/16	1/8	9/16	3/8
2170		1/4	3/8	1/16	5/8	1/4
91116	B	5/16	1/2	1/8	3/4	3/8
91106	C			3/16	5/8	1/2
2174	A		7/16	1/16	19/32	15/64
91117				1/8	9/16	3/8
91107				3/32	5/8	5/16
2175		3/8	1/2	1/16	41/64	1/4
2177		7/16	9/16		3/4	1/4
2186		1/2	3/4		1/16	5/16
2188		9/16	13/16			
2187		5/8	7/8		1-1/8	
2189		3/4		1/32	1"	5/32

- Grommets are made from Black Buna-S Synthetic Rubber (SBR), approximately 60 durometer.
- Prevents wire chafing through holes in panels from 1/16" to 7/8" as indicated in table.

Caterpillar Grommets

- Insulates and prevents chafing wires.
- Made of black nylon, type 6/6.

PART NO.	CHASSIS THICKNESS RANGE	DIMENSIONS PANEL A	WIDTH B	THCK C	HEIGHT D	LENGTH
2692	.042-.052	.047	.139	.047	.190	25'
2693	.075-.085	.080	.182	.052	.200	25'
2694	.115-.125	.120	.232	.057	.220	25'

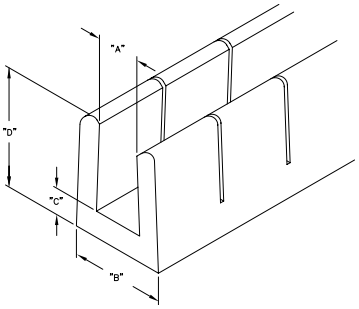

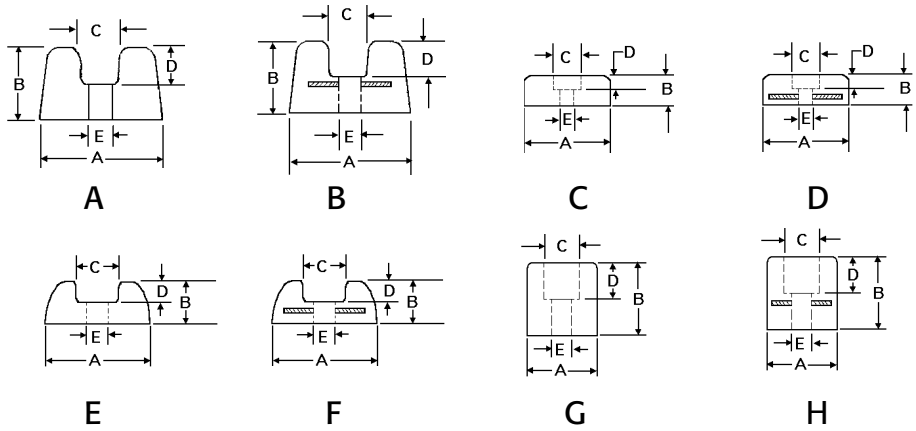

- Recessed bumpers with a clearance hole for attachment offers convenient protection for electrical equipment.
- Rubber material is a Black Buna-S Synthetic Rubber (SBR), approximately 60 durometer.
- Some styles of bumpers offer molded-in steel washers for support as indicated in table.
- Alternative sizes and shapes are available in quantity from the factory.

PART NO.	ILLUS.	MATERIALS & ACCESSORIES	SCREW CLR. ID	O.D.	HEIGHT	RECESS DIA	RECESS DEPTH
			E	A	B	C	D
2192	A	Rubber	1/8	1/2	1/4	1/4	1/8
2190	B	Rubber - Washer					
2455	A	Rubber		17/32			5/32
2184	A	Rubber	5/32	5/8	9/32	9/32	1/8
2193	C	Rubber	1/8		15/32	1/4	3/16
2136	D	Rubber - Washer	3/16				
2456	G	Rubber	11/64		5/8	5/16	5/16
2139	H	Rubber - Washer	5/32				
2457	A	Rubber	1/8	11/32	13/23	1/4	7/32
2463	B	Rubber - Washer					
2458	A	Rubber	3/32	23/32	17/32	7/32	1/4
2459	C	Rubber	1/8	3/4	9/32	1/4	1/8
2464	D	Rubber - Washer					
2194	C	Rubber - Washer			3/8	9/32	3/16
2465	H	Rubber - Washer	3/16		9/16	3/8	5/16
2138	E	Rubber		15/16	3/8	3/8	3/16
2135	F	Rubber - Washer					
2461	G	Rubber	1/8	1"	1"	1/4	5/8
2137	H	Rubber - Washer					

Wire & Cable Clamps

Fahnestock Clips

- Fahnestock clips are made of nickel plated spring brass and designed for screw-on application as indicated in table.
- Type 539 Fahnestock clip has an additional hole for wire soldering.

PART NO.	A	B	MOUNTING
539	9/16	.41	#4 Hole
533	1-1/16	.88	#6 Hole

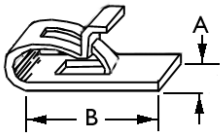

- **See our website @ www.abbatron.com for a full list of cable clamps.**

Wire Strain Reliefs

- Wire strain relief clamps are made of black nylon, type 6/6, and are offered in right angle or straight-through styles.
- One piece, these easy to install reliefs absorb pull and twist stress on power cords. They fully insulate and permanently anchor the power cord.
- U.L. and CSA recognized components.

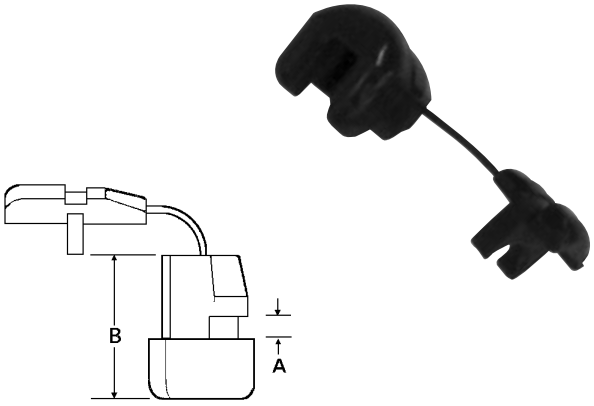

PART NO.	UL & CSA STYLES	USE WITH WIRE TYPES	APPROX. CABLE SIZES	DIMENSIONS			
				CHASSIS HOLE	ACROSS FLATS	CHASSIS A	LENGTH B
938	SR-3P-4	SPT-1	.12X.22	7/16	25/64	1/16	13/32
939	SR-5N-4	SV,SVT,HPD	1/4X19/64 Dia.	1/2	29/64	1/16	7/16
823	SR-6N-4	SJ,SJT,SJO	.330-.360 Dia.	5/8	35/64	1/16	37/64

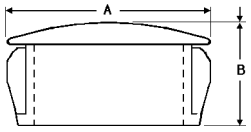

- Hole plugs are black, type 6/6 nylon.
- Part number 3083 is vented.

PART NO.	HOLE DIA.	DIA. A	HEIGHT B	MAX CHASSIS
3089	1/4	5/16	5/16	1/16
3090	5/16	3/8		
3091	3/8	15/32	13/32	1/8
3092	1/2	67/64		
3093	5/8	23/32		
3094	3/4	27/32		
3095	1	1-1/8	29/64	
3083		1-13/64		
3096	1-1/8	1-7/32		
3097	1-1/4	1-3/8		
3098	1-3/8	1-1/2		
3099	1-1/2	1-43/64		

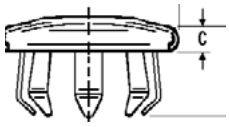

- Hole plugs are nickel plated steel.
- Prongs are adjustable to ensure a snug fit.
- Part number 656 is vented.

PART NO.	HOLE DIA.	NO.OF PRONGS	DIA.	LENGTH	HEIGHT
650	1/4	6	13/32	15/64	1/16
651	5/16		7/16	1/4	
652	3/8		1/2	15/64	
653	1/2	8	21/32	9/32	5/64
654	5/8		13/16	19/64	
655	3/4	12	59/64		
608	7/8		1-1/16		1/16
612	1		1-9/64	21/64	3/32
656	1	6	1-5/32	19/64	5/64
3084	1-1/8	12	1-5/16	11/32	
3085	1-1/4		1-7/16		3/32
3086	1-3/8		1-9/16	13/32	5/64
3087	1-1/2		1-41/64		3/32

INTERNAL THREADED HANDLE

PART NO.	MAT.	FINISH	HT.	RADIUS	MOUNTING CENTERS	THREAD & DEPTH
5/32 Diameter						
1633	Brass	Zinc	1	3/16	1 - 1/4	4 - 40 x 3/8
1632		Chrome				
1634	Aluminum	Satin				
1635		Blk Anodized				
1637	Brass	Zinc			2	
1636		Chrome				
1638	Aluminum	Satin				
1639		Blk Anodized				
1641	Brass	Zinc			3	
1640		Chrome				
1642	Aluminum	Satin				
1643		Blk Anodized				
1/4 Diameter						
1617	Brass	Zinc	1-1/2	1/4	2	8 - 32 x 9/16
1616		Chrome				
1621		Zinc			3	
1620		Chrome				
5/16 Diameter						
2057	Brass	Chrome	1-1/2	5/16	3	10 - 32 x 9/16
1604		Zinc			4 - 1/4	
2056		Chrome				

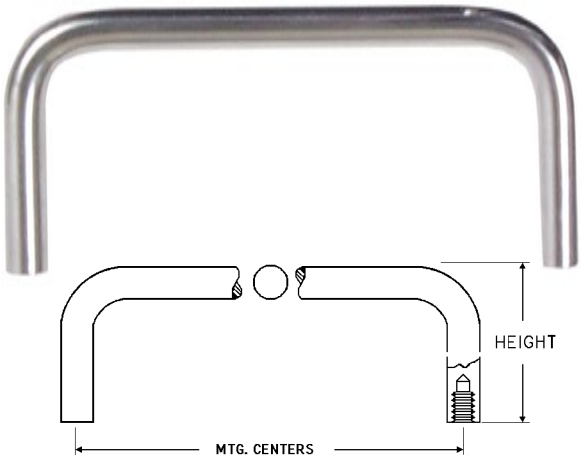

INTERNAL THREADED HANDLES

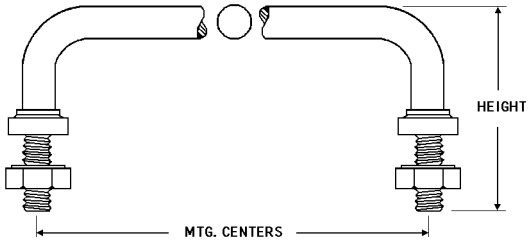

EXTERNAL THREADED HANDLES

EXTERNAL THREADED HANDLE

PART NO.	MAT.	FINISH	HT.	RADIUS	MOUNTING CENTERS	THREAD & DEPTH
1610	Brass	Black Zinc	2 - 1/8	5/16	3	5/16 - 18 x 5/16

SHAFT COUPLERS

PART NO.	ID A	ID B	OD C	LG D	# SCREWS	E
BRASS COUPLER -- NICKEL PLATED						
120	0.25	0.25	0.438	0.75	2	3/16
131		0.375	0.5			
MINI. COUPLER -- BRASS-NICKEL PLATED						
180	0.125	0.125	0.281	0.375	4	5/64

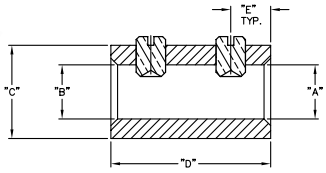

Shaft Couplers

SHAFT LOCKS

PART NO.	FIG.	FOR SHAFT SIZE	DIMENSIONS A	B	C	D	THREAD SIZE
Bushing Mount							
181	A	1/4	.253	1/2	1/2	7/16	3/8-32
182	B			1/2		1	
183	C	1/8	.128	9/16	11/32	5/16	
Panel Mount							
114	C	1/4	.253	1/2	7/16	7/16	3/8-32

All shaft accessories shown on this page are machined from brass and nickel plated.

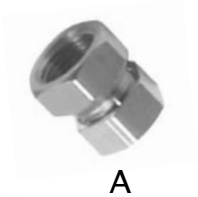

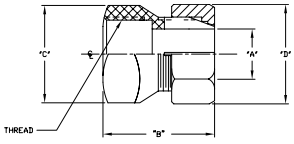

A

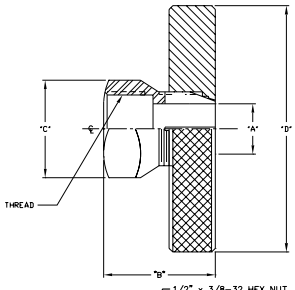

B

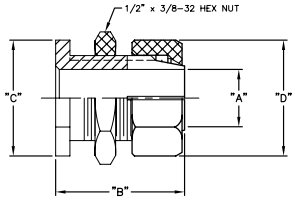

C

Shaft Locks

PANEL BEARINGS

PART NO.	FOR SHAFT SIZE	DIMENSIONS A I.D.	B HEX	C LGTH.	D BODY	E THD.
184	1/8" Mini.	.128	11/32	7/16	3/8	1/4-32
119	1/4"	.253	7/16	1/2	7/16	3/8-32

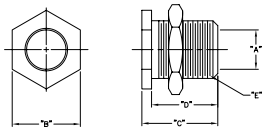

Panel Bearings

BUSHING EXTENDERS

PART NO.	BODY LENGTH (A)	THREAD LENGTH (B)
2350	5/8	3/16
2351	5/8	1/4
2352	5/8	3/8
2353	11/16	3/8
2354	11/16	1/2
2355	3/4	1/4

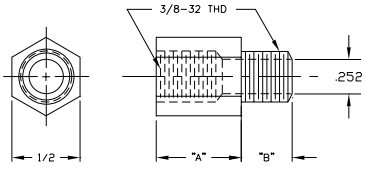

Bushing Extenders

High Voltage Insulators

- Abbatron High Voltage Insulators are ideal for high-voltage, high-temperature standoff and/or feed-thru applications. They are not intended for high-vacuum or hermetically sealed use, nor with heavy shear loads.
- Temperature ratings recommend Steatite safe operation to 1800°F (980°C). Cushion washers may further limit operating temperature.
- Voltage ratings (recommended in table) are specified under clean, dry conditions only. Moisture and/or dirt will de-rate up to 50%.
- Nominal operating current, limited by hardware size, shown for AC, 60Hz, 10°C rise.
- These insulators are made from Grade L-5 Steatite per MIL-I-10E. Hardware is nickel plated brass except for solder lugs, which are tin plated. Cushion washers are "Champak", compressed paper or cork.

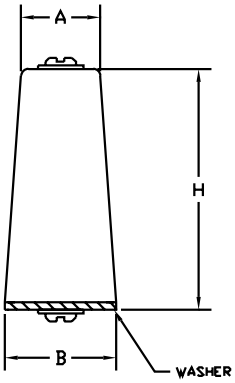

PART NO.	VOLT RATING	MIN. DIA. A	MIN. DIA. B	HEIGHT H	SCREW SIZE
9500	3 KV	7/16	5/8	21/32	6-32
9501	4 KV	1/2	3/4	1-1/32	8-32
9502	5 KV	1/2	1	1-9/16	8-32
9503	10 KV	5/8	1-1/8	2-1/16	10-32

Steatite Material Specifications:

- Water absorption 0.05% maximum
- 2600°C softening temperature
- Coefficient of Expansion 7.5 (In/In. per °C x 10^{-6})
- Dialectric strength 250 Volts per mil.
- .003 power factor at 1MHz
- Clear glaze finish over creamy white colored Steatite material.

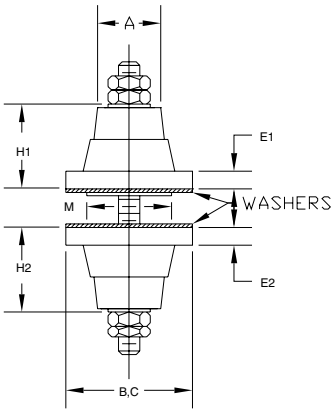

A

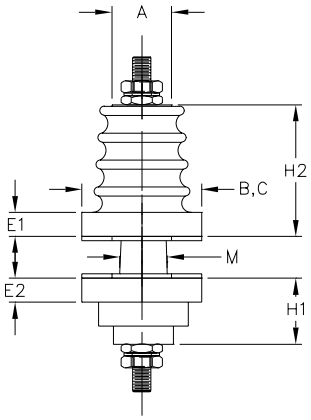

B

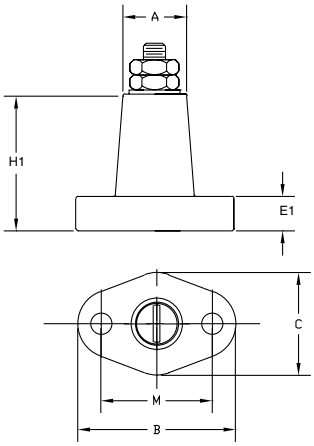

D

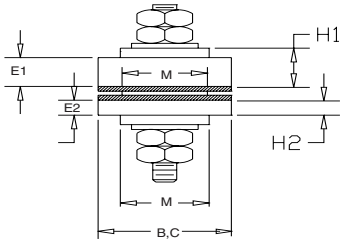

C

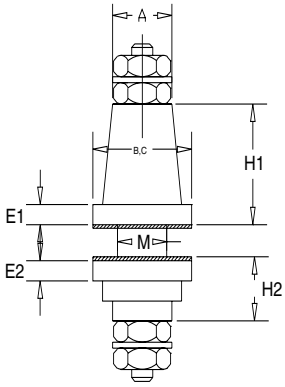

E

All insulators are supplied with hardware shown.

PART NO.	FIG.	VOLT RATING	HEIGHT		HEIGHT		MIN. DIA.	FLANGE WIDTH		MOUNTING	SCREW THD SIZE	STUD LENGTH
			H1	H2	E1	E2	A	B	C	M		
9524	D	1KV	5/8		3/32		13/64	1	7/32	11/16	6-32	13/64
9555AD	C		1/4	5/32	3/16	3/32	1/2	3/4	3/4	1/2		1-1/4
9550AA	A		1/2	1/2	1/8	1/8	3/8					2
9522	D	3KV	1		7/64	7/64	15/32	1-5/32	19/64	13/16	8/32	1/4
9542AA	E		7/8	3/8	1/8	1/8	1/2	3/4	3/4	3/8	10/32	2-3/8
9551AB	A		27/32				5/8	1-1/4	3/16	7/8		2-7/8
9540AB	E	5KV	1-1/4		1/2		19/32	15/16		7/16		W2-7/8
9545	B		1-3/8		11/16		5/8	1-1/4	1/4	1/2		3-1/2
9552AA	A		1-1/8				7/8	1-3/4		1-1/4	1/4-20	4-3/8

Spacers are mechanical devices used to physically or electrically separate board, chassis, components and other devices from each other. They may also be used to locate, hinge and guide parts in electrical and mechanical assemblies. They are not intended to be used as precision bearings or shafts or as highly precise jacking or adjusting devices.

Materials:

Brass: Is the most common material for high quality spacers. It provides strength, corrosion resistance and electrical conductivity. It is non-magnetic and will stand up well to most environmental conditions, including heat and humidity. The weight of larger brass spacers can be a disadvantage in certain situations.

Aluminum: Spacers provide a compromise between weight and strength. Although they cannot be provided in solderable finishes, they can be plated with special colored finishes besides the standard clear chromate. Anodized finishes have insulating characteristics when undamaged, and can be provided in a black matte, non-reflective surface. Aluminum is non-magnetic and can withstand severe conditions when properly finished.

Nylon: Is a general-purpose insulating material for spacers. Molded threads are precise and will withstand torquing without stripping. It is an excellent insulator and its surface lubricity allows wires to be routed against the spacer without fear of chafing the insulation. Disadvantages of nylon are relatively low operating temperature, cold-flow under high-compressive loading and a tendency to absorb up to 2% moisture in high humid ambients.

Phenolic: Are made from paper-base, resin impregnated, heat-cured materials. High torque should not be applied to these spacers. They are the insulating spacer of choice when higher temperatures are encountered than can be withstood by nylon, or where greater strength without cold-flow is required.

Ceramic: Spacers are a Grade L-5 Steatite material, glazed and fired at high temperature. They exhibit exceptional strength in compression and tension, but are quite weak in shear and torsion, as are all glass-type materials. Ceramic spacers will withstand very high operating temperatures and very high voltages without flash-over. Due to the nature of the manufacturing processes, high tolerances cannot be met in dimensions or threading, so these spacers should not be considered as precise devices. Tightening torques on fasteners should be held to a minimum and no shear or torsional load should be applied to spacers in use.

Alternate materials such as **Stainless Steel** are available in quantity from the factory. Call for details.

Shape: Standard spacers are offered in round or hex external form. Other forms can be supplied in quantity as specials from the factory. **Round** spacers are generally used for minimum clearance requirements and as a general use shape. **Hex** spacers are used primarily in threaded spacers where wrench use and tightening are required. For this reason, hex spacers are only offered in threaded styles, while round spacers are offered in clearance and threaded types.

Diameters: Outside diameters are graduated with regard to internal thread sizes for strength, minimum clearance requirements and footprint area. In general, a minimum of two thread sizes are provided for each OD. For specifications not illustrated in the following pages, contact the factory or your sales representative for more information.

Length: Standard spacers are generally offered in lengths of 1/8" to 1". Extended length spacers are available up to six inches in graduated half and full inch increments in aluminum and ceramic only. For metallic spacers, this is an issue of weight versus function. Brass and steel spacers tend to be unacceptably heavy in the longer lengths and serve no purpose which cannot be met by aluminum. Ceramic spacers are offered in longer lengths, proportionally sized in OD for high-voltage and high-compressive requirements.

Finishes: Various finishes have been selected as standard for each of the materials supplied. They represent the most practical and cost-effective finish for the majority of applications. Alternative finishes are available on special order in quantity from the factory, including most MIL-spec requirements.

Threading: There are three possible ways to thread the inside of a spacer: (1) Straight through with continuous thread throughout. (2) Halfway from each end, meeting near the middle with no continuity of the thread throughout. (3) Part way in from each end, with no hole through the rest of the spacer. The method used on any style of spacer depends on the length and its ratio to the diameter of the tap. Excessively deep threading is costly and usually not necessary. Threads are only made continuous where practical. Please refer to the **Thread Depth Table** throughout the next section for standard parameters. Special depths can be ordered in quantity from the factory.

Mounting Footprint: End finish techniques of outside chamfering and countersinking reduce the total surface area in contact with the mounting surface of the spacers, increasing pressure at this surface. If the area is too small, fastening pressure will cause the spacer to dig in to the surface, deforming and possibly cracking it. For that reason, most thread sizes are offered in two different OD spacers to allow a choice of pressure versus clearance requirements.

LENGTH		O.D.	I.D.				
			#2	#4	#6	#8	#10
.125	1/8	3/16	9000	9015			
		1/4		8700	8701	8702	
		3/8				8732	9375A
.187	3/16	3/16	9001	9016			
		1/4		8703	8704	8705	
		3/8				8735	9375B
.250	1/4	3/16	9002	9017			
		1/4		2340	2100	2105	
		3/8				2115	9375C
.312	5/16	3/16	9003	9018			
		1/4		8706	8707	8708	
		3/8				8738	9375D
.375	3/8	3/16	9004	9019			
		1/4		2341	2101	2106	
		3/8				2116	9375E
.437	7/16	3/16	9005	9020			
		1/4		8709	8710	8711	
		3/8				8741	9375F
.500	1/2	3/16	9006	9021			
		1/4		2342	2102	2107	
		3/8				2117	9375G
.562	9/16	3/16	9007	9022			
		1/4		8712	8713	8714	
		3/8				8744	9375H
.625	5/8	3/16	9008	9023			
		1/4		8715	8716	8717	
		3/8				8747	9375J
.687	11/16	3/16	9009	9024			
		1/4		8718	8719	8720	
		3/8				8750	9375K
.750	3/4	3/16	9010	9025			
		1/4		2343	2103	2108	
		3/8				2118	9375L
.812	13/16	3/16	9011	9026			
		1/4		8721	8722	8723	
		3/8				8753	9375M
.875	7/8	3/16	9012	9027			
		1/4		8724	8725	8726	
		3/8				8756	9375N
.937	15/16	3/16	9013	9028			
		1/4		8727	8728	8729	
		3/8				8759	9375P
1	1	3/16	9014	9029			
		1/4		2344	2104	2109	
		3/8				2119	9375Q

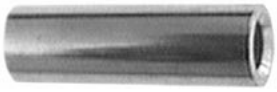

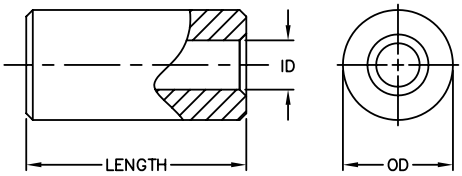

- Standard **nickel plating** provides a hard, bright, non-oxidizing surface which will stand up to difficult ambient conditions.

Special order options include:

- Alternative plating finishes such as zinc, silver or gold.
- Odd sizes, taps or threads, plus swage or other shapes.
- Abbatron offers engineering services for special application parts or materials.

SCREW NO.	MAJOR DIA.	HOLE SIZE
#2	0.086	0.093
#3	0.099	0.100
#4	0.112	0.120
#5	0.125	0.130
#6	0.138	0.144
#8	0.164	0.169
#10	0.190	0.196
#12	0.216	0.220

Brass Round Standoffs

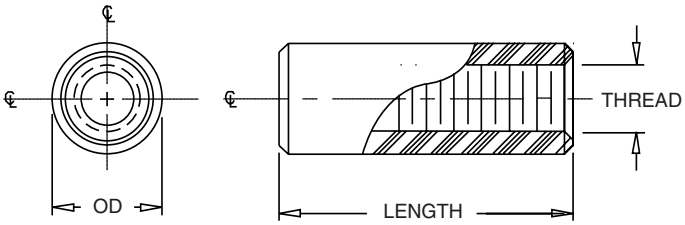

Standard **nickel plating** provides a hard, bright, non-oxidizing surface which will stand up to difficult ambient conditions.

Options include:

- Alternative plating finishes such as zinc, silver or gold.
- Odd sizes, taps or threads, plus swage or other shapes.
- Abbatron offers engineering services for special application parts or materials.

LENGTH		O.D.	THREAD				
			#2-56	#4-40	#6-32	#8-32	#10-32
0.125	1/8	3/16	9030	9045			
		1/4		8760	8761	8762	
		3/8				7902	9380A
0.187	3/16	3/16	9031	9046			
		1/4		8763	8764	8765	
		3/8				7905	9380B
0.25	1/4	3/16	9032	9047			
		1/4		2370	2120	2125	
		3/8				7908	9380C
0.312	5/16	3/16	9033	9048			
		1/4		8766	8767	8768	
		3/8				7911	9380D
0.375	3/8	3/16	9034	9049			
		1/4		2371	2121	2126	
		3/8				7914	9380E
0.437	7/16	3/16	9035	9050			
		1/4		8769	8770	8771	
		3/8				7917	9380F
0.5	1/2	3/16	9036	9051			
		1/4		2372	2122	2127	
		3/8				7920	9380G
.562	9/16	3/16	9037	9052			
		1/4		8772	8773	8774	

LENGTH		O.D.	THREAD			
			#2-56	#4-40	#6-32	#8-32
.625	5/8	3/16	9038	9053		
		1/4		8775	8776	8777
.687	11/16	3/16	9039	9054		
		1/4		8778	8779	8780
.750	3/4	3/16	9040	9055		
		1/4		2373	2123	2128
.812	13/16	3/16	9041	9056		
		1/4		8781	8782	8783
.875	7/8	3/16	9042	9057		
		1/4		8784	8785	8786
.937	15/16	3/16	9043	9058		
		1/4		8787	8788	8789
1	1	3/16	9044	9059		
		1/4		2374	2124	2129
1.125	1-1/8	1/4		8760R	8761R	8762R
1.250	1-1/4			8760S	8761S	8762S
1.375	1-1/3			8760T	8761T	8762T
1.500	1-1/2			8760U	8761U	8762U
1.625	1-5/8			8760V	8761V	8762V
1.175	1-3/4			8760W	8761W	8762W
1.875	1-7/8			8760X	8761X	8762X
2	2			8760Y	8761Y	8762Y

Maximum Thread Depth				
Thread Size	4-40	6-32	8-32	10-32
Thread Length Tapped Thru	1"	1"	1"	1"
Thread Length Tap each end	1/4"	7/16"	7/16"	1/2"

Maximum Thread Depth				
Thread Size	**4-40**	**6-32**	**8-32**	**10-32**
Thread Length Tapped Thru	1"	1"	1"	1"
Thread Length Tap each end	1/4"	7/16"	7/16"	1/2"

- Standard **nickel plating** provides a hard, bright, non-oxidizing surface which will stand up to difficult ambient conditions.
- Alternative plating finishes, odd sizes, taps or threads.

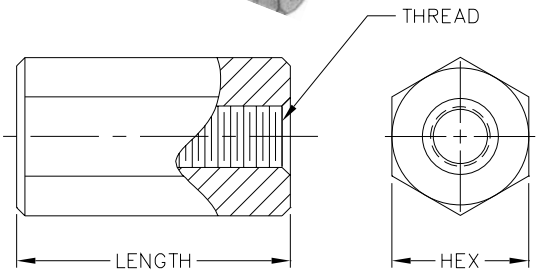

LENGTH		O.D.	THREAD #2-56	#4-40	#6-32	#8-32
0.125	1/8	3/16	9130	9145		
		1/4		8820	8821	8822
0.187	3/16	3/16	9131	9146		
		1/4		8823	8824	8825
0.25	1/4	3/16	9132	9147		
		1/4		2330	2320	2325
0.312	5/16	3/16	9133	9148		
		1/4		8826	8827	8828
0.375	3/8	3/16	9134	9149		
		1/4		2331	2321	2326
0.437	7/16	3/16	9135	9150		
		1/4		8829	8830	8831
0.5	1/2	3/16	9136	9151		
		1/4		2332	2322	2327
0.562	9/16	3/16	9137	9152		
		1/4		8832	8833	8834
.625	5/8	3/16	9138	9153		
		1/4		8835	8836	8837

LENGTH		O.D.	THREAD #2-56	#4-40	#6-32	#8-32
.687	11/16	3/16	9139	9154		
		1/4		8838	8839	8840
.750	3/4	3/16	9140	9155		
		1/4		2333	2323	2328
.812	13/16	3/16	9141	9156		
		1/4		8841	8842	8843
.875	7/8	3/16	9142	9157		
		1/4		8844	8845	8846
.937	15/16	3/16	9143	9158		
		1/4		8847	8848	8849
1	1	3/16	9144	9159		
		1/4		2334	2324	2329
1.125	1-1/8	1/4		8820R	8821R	8822R
1.250	1-1/4			8820S	8821S	8822S
1.375	1-3/8			8820T	8821T	8822T
1.500	1-1/2			8820U	8821U	8822U
1.625	1-5/8			8820V	8821V	8822V
1.75	1-3/4			8820W	8821W	8822W
1.875	1-7/8			8820X	8821X	8822X
2	2			8820Y	8821Y	8822Y

Brass Male/Female Hex Standoffs

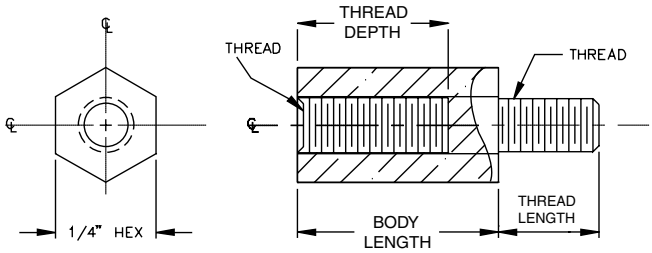

- Hex shaped standoffs are ideal wherever wrench tightening may be required.
- Standard **nickel plating** provides a hard, bright, non-oxidizing surface which will stand up to difficult ambient conditions.
- Alternative finish, size or thread can be custom manufactured upon request.

BODY LENGTH		4-40	6-32	8-32
.250	1/4	8216	8248	8280
.375	3/8	8217	8249	8281
.500	1/2	8218	8250	8282
.625	5/8	8219	8251	8283
.750	3/4	8220	8252	8284
.875	7/8	8221	8253	8285
1	1	8222	8254	8286
1.125	1-1/8	8223	8255	8287
1.250	1-1/4	8224	8256	8288
1.375	1-3/8	8225	8257	8289
1.500	1-1/2	8226	8258	8290
1.625	1-5/8	8227	8259	8291
1.750	1-3/4	8228	8260	8292
2	2	8229	8261	8293
2.500	2-1/2	8230	8262	8294
3	3	8231	8263	8295

Thread Specs for Male/Female Standoffs (min)			
Thread Size	Body Length	Thread Depth	Thread Length
4-40	1/4"	1/8"	3/16"
	3/8" to 3"	1/4"	
6-32 & 8-32	1/4"	1/8"	1/4"
	3/8"	1/4"	
	1/2"	11/32"	3/8"
	5/8" to 3"	3/8"	

Brass Male/Male Adapters

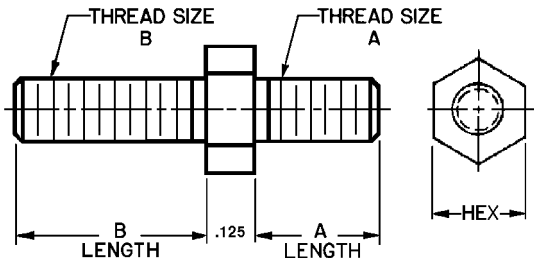

- Brass Male/Male Adapters serve as a quick and easy way to "make it fit". Other thread sizes or lengths can be manufactured in quantity at the factory.
- Standard finish is **nickel plating.** Alternative plating finishes such as zinc are also available upon request.
- Features of all brass spacers include strength, corrosion resistance and electrical conductivity. All brass parts are non-magnetic.
- Abbatron offers engineering services for special application parts or materials.

PART NO.	HEX	THREAD "A"		THREAD "B"	
		SIZE	LENGTH 'A'	SIZE	LENGTH 'B'
8300	1/4	4-40	3/16	4-40	3/16
8301				6-32	1/4
8302		6-32	1/4		
8303				8-32	3/8
8304		8-32	3/8		
8305				10-32	
8306	5/16				
8307		10-32			

FEMALE/FEMALE ROUND SWIVEL STANDOFFS (FIGURE 1)				
PART #	LENGTH	O.D.	THREAD	A
3021	3/4	3/16	4-40	3/8"
3022	1			5/8"
3023	3/4	1/4	6-32	3/8"
3024	1			5/8"
3025	3/4		8-32	3/8"
3026	1			5/8"

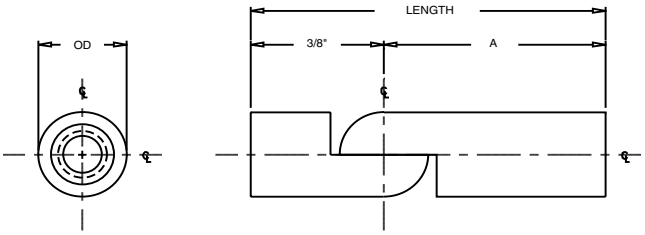

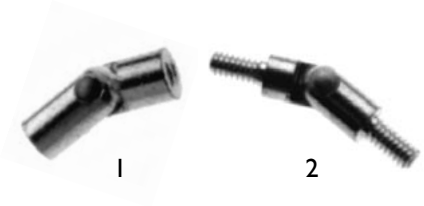

- Abbatron offers durable swivel standoffs can be used as hinges or as certain right angle fasteners.
- Nickel plated finish. Alternative finishes available.
- All part numbers shown here are standard factory supported parts. Other sizes are available in quantity.

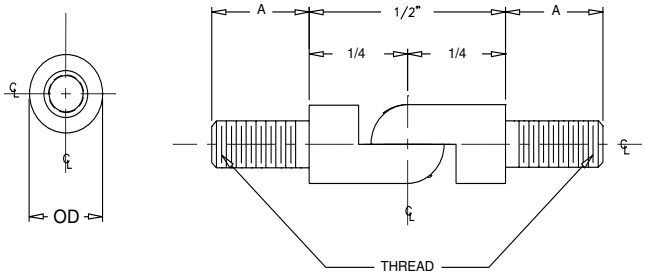

MALE/MALE ROUND SWIVEL STANDOFFS (FIGURE 2)			
PART #	O.D.	THREAD	A
3027	3/16	4-40	1/4"
3028	1/4	6-32	5/16"
3029		8-32	

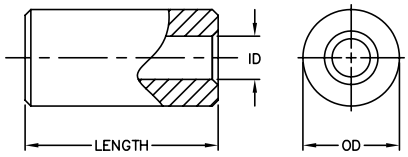

- Standard clear chromate finish. Alternative finishes are also available in quantity.
- Aluminum spacers offer a light-weight alternative to standard brass counterparts.

SCREW NO.	MAJOR DIA.	HOLE SIZE
#2	0.086	0.093
#3	0.099	0.100
#4	0.112	0.120
#5	0.125	0.130
#6	0.138	0.144
#8	0.164	0.169
#10	0.190	0.196
#12	0.216	0.220

LENGTH		O.D.	I.D.			
			#4	#6	#8	#10
0.125	1/8	1/4	8480	8500	8520	
		5/16		9389A	9390A	8540
		3/8			9391A	9392A
0.187	3/16	1/4	9200	9207	9214	
		5/16		9389B	9390B	9221
		3/8			9391B	9392B
0.250	1/4	1/4	8481	8501	8521	
		5/16		9389C	9390C	8541
		3/8			9391C	9392C
0.312	15/16	1/4	9201	9208	9215	
		5/16		9389D	9390D	9222
		3/8			9391D	9392D
0.375	3/8	1/4	8482	8502	8522	
		5/16		9389E	9390E	8542
		3/8			9391E	9392E
0.437	7/16	1/4	9202	9209	9216	
		5/16		9389F	9390F	9223
		3/8			9391F	9392F
0.500	1/2	1/4	8483	8503	8523	
		5/16		9389G	9390G	8543
		3/8			9391G	9392G
0.562	9/16	1/4	9203	9210	9217	
		5/16		9389H	9390H	9224
		3/8			9391H	9392H
0.625	5/8	1/4	8484	8504	8524	
		5/16		9389J	9390J	8544
		3/8			9391J	9392J
0.687	11/16	1/4	9204	9211	9218	
		5/16		9389K	9390K	9225
		3/8			9391K	9392K

LENGTH		O.D.				
			#4	#6	#8	#10
0.750	3/4	1/4	8485	8505	8525	
		5/16		9389L	9390L	8545
		3/8			9391L	9392L
0.812	13/16	1/4	9205	9212	9219	
		5/16		9389M	9390M	9226
		3/8			9391M	9392M
0.875	7/8	1/4	8486	8506	8526	
		5/16		9389N	9390N	8546
		3/8			9391N	9392N
0.937	15/16	1/4	9206	9213	9220	
		5/16		9389P	9390P	9227
		3/8			9391P	9392P
1	1	1/4	8487	8507	8527	
		5/16		9389Q	9390Q	8547
		3/8			9391Q	9392Q
1.125	1 1/8	1/4	8480R	8500R	8520R	
		5/16		9389R	9390R	8540R
1.250	1 1/4	1/4	8488	8508	8528	
		5/16		9389S	9390S	8548
1.375	1 3/8	1/4	8480T	8500T	8520T	
		5/16		9389T	9390T	8540T
1.500	1 1/2	1/4	8480	8509	8529	
		5/16		9389U	9390U	8549
1.625	1 5/8	1/4	8480V	8500V	8520V	
		5/16		9389V	9390V	8540V
1.750	1 3/4	1/4	8490	8510	8530	
		5/16		9389W	9390W	8550
1.875	1 7/8	1/4	8480X	8500X	8520X	
		5/16		9389X	9390X	8540X
2.000	2	1/4	8491	8511	8531	
		5/16		9389Y	9390Y	8551

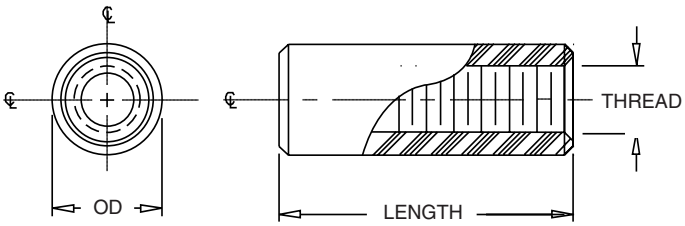

LENGTH		O.D.	#4-40	#6-32	#8-32	#10-32
0.125	1/8	1/4	8320	8340	8360	
		5/16		9396A	9397A	8380
		3/8			9398A	9399A
0.187	3/16	1/4	9228	9235	9242	
		5/16		9396B	9397B	9249
		3/8			9398B	9399B
0.250	1/4	1/4	8321	8341	8361	
		5/16		9396C	9397C	8381
		3/8			9398C	9399C
0.312	5/16	1/4	9229	9236	9243	
		5/16		9396D	9397D	9250
		3/8			9398D	9399D
0.375	3/8	1/4	8322	8342	8362	
		5/16		9396E	9397E	8382
		3/8			9398E	9399E
0.437	7/16	1/4	9230	9237	9244	
		5/16		9396F	9397F	9251
		3/8			9398F	9399F
0.500	1/2	1/4	8323	8343	8363	
		5/16		9396G	9397G	8383
		3/8			9398G	9399G
0.562	9/16	1/4	9231	9238	9245	
		5/16		9396H	9397H	9252
		3/8			9398H	9399H
0.625	5/8	1/4	8324	8344	8364	
		5/16		9396J	9397J	8384
		3/8			9398J	9399J
0.687	11/16	1/4	9232	9239	9246	
		5/16		9396K	9397K	9253
		3/8			9398K	9399K
0.450	3/4	1/4	8325	8345	8365	
		5/16		9396L	9397L	8385
		3/8			9398L	9399L
0.812	13/16	1/4	9233	9240	9247	
		5/16		9396M	9397M	9254
		3/8			9398M	9399M
0.875	7/8	1/4	8326	8346	8366	
		5/16		9396N	9397N	8386
		3/8			9398N	9399N

LENGTH		O.D.	#4-40	#6-32	#8-32	#10-32
0.937	15/16	1/4	9234	9241	9248	
		5/16		9396P	9397P	9255
		3/8			9398P	9399P
1	1	1/4	8327	8347	8367	
		5/16		9396Q	9397Q	8387
		3/8			9398Q	9399Q
1.125	1-1/8	1/4	8320R	8340R	8360R	
		5/16		9396R	9397R	8380R
1.250	1/1/4	1/4	8328	8348	8368	
		5/16		9396S	9397S	8388
1.375	1-3/8	1/4	8320T	8340T	8360T	
		5/16		9396T	9397T	8380T
1.500	1-1/2	1/4	8329	8349	8369	
		5/16		9396U	9397U	8389
1.625	1-5/8	1/4	8320V	8340V	8360V	
		5/16		9396V	9397V	8380V
1.750	1-3/4	1/4	8330	8350	8370	
		5/16		9396W	9397W	8390
1.875	1-7/8	1/4	8320X	8340X	8360X	
		5/16		9396X	9397X	8380X
2	2	1/4	8331	8351	8371	
		5/16		9396Y	9397Y	8391
2.250	2-1/4	1/4	8320ZA	8340ZA	8360ZA	
2.500	2-1/2		8332	8352	8372	
2.750	2-3/4		8320ZC	8340ZC	8360ZC	
3	3		8333	8353	8373	
3.250	3-1/4		8320ZE	8340ZE	8360ZE	
3.500	3-1/2		8334	8354	8374	
3.750	3-3/4		8320ZG	8340ZG	8360ZG	
4	4		8335	8355	8375	
4.500	4-1/2		8320ZJ	8340ZJ	8360ZJ	
5	5		8320ZK	8340ZK	8360ZK	
5.500	5-1/2		8320ZL	8340ZL	8360ZK	
6	6		8320ZM	8340ZM	8360ZM	

- Aluminum standoffs offer a light-weight alternative to standard brass counterparts.
- Standard clear chromate finish.
- Please reference the Thread Depth Chart at bottom of page. For more information, see page 40.

Maximum Thread Depth				
Thread Size	4-40	6-32	8-32	10-32
Thread Length Tapped Thru	1"	1"	1"	1"
Thread Length Tap each end	1/4"	7/16"	7/16"	1/2"

Aluminum Hex Standoffs

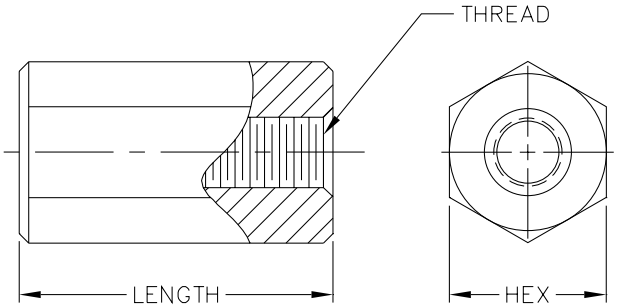

- Aluminum with clear chromate finish.
- Hex shape for wrench tightening.

*Please see page 40 for more information on aluminum standoffs and finishes.

Maximum Thread Depth				
Thread Size	**4-40**	**6-32**	**8-32**	**10-32**
Thread Length Tapped Thru	1"	1"	1"	1"
Thread Length Tap each end	1/4"	7/16"	7/16"	1/2"

LENGTH		O.D.	THREAD			
			#4-40	#6-32	#8-32	#10-32
.125	1/8	1/4	8400	8420	8440	
		5/16		9403A	9404A	8460
		3/8			9405A	9406A
.187	3/16	1/4	9284	9291	9298	
		5/16		9403B	9404B	9035
		3/8			9405B	9406B
.250	1/4	1/4	8401	8421	8441	
		5/16		9403C	9404C	8461
		3/8			9405C	9406C
.312	5/16	1/4	9285	9292	9299	
		5/16		9403D	9404D	9306
		3/8			9405D	9406D
.375	3/8	1/4	8402	8422	8442	
		5/16		9403E	9404E	8462
		3/8			9405E	9406E
.437	7/16	1/4	9286	9293	9300	
		5/16		9403F	9404F	9307
		3/8			9405F	9406F
.500	1/2	1/4	8403	8423	8443	
		5/16		9403G	9404G	8463
		3/8			9405G	9406G
.562	9/16	1/4	9287	9294	9301	
		5/16		9403H	9404H	9308
		3/8			9405H	9406H
.625	5/8	1/4	8404	8424	8444	
		5/16		9403J	9404J	8464
		3/8			9405J	8406J
.687	11/16	1/4	9288	9295	9302	
		5/16		9403K	9404K	9309
		3/8			9405K	9406K
.750	3/4	1/4	8405	8425	8445	
		5/16		9403L	9404L	8465
		3/8			9405L	9406L

LENGTH		O.D.	THREAD			
			#4-40	#6-32	#8-32	#10-32
.812	13/16	1/4	9289	9296	9303	
		5/16		9403M	9404M	9310
		3/8			9405M	9406M
.875	7/8	1/4	8406	8426	8446	
		5/16		9403N	9404N	8466
		3/8			9405N	9406N
.937	15/16	1/4	9290	9297	9304	
		5/16		9403P	9404P	9311
		3/8			9405P	9506P
1.000	1	1/4	8407	8427	8447	
		5/16		9403Q	9404Q	8467
		3/8			9405Q	9406Q
1.250	1-1/4	1/4	8408	8428	8448	
		5/16		9403R	9404R	8468
1.375	1-3/8	1/4	8400T	8420T	8440T	
		5/16		9403T	9403T	8460T
1.500	1-1/2	1/4	8409	8429	8449	
		5/16		9403U	9404U	8469
1.625	1-5/8	1/4	8400V	8420V	8440V	
		5/16		9403V	9404V	8460V
1.750	1-3/4	1/4	8410	8430	8450	
		5/16		9403W	9404W	8470
1.875	1-7/8	1/4	8400X	8420X	8440X	
		5/16		9403X	9404X	8460X
2.000	2	1/4	8411	8431	8451	
		5/16		9403Y	9404Y	8471
2.250	2-1/4	1/4	8400ZA	8420ZA	8440ZA	
2.500	2-1/2		8412	8432	8452	
2.750	2-3/4		8400ZC	8420ZC	8440ZC	
3.000	3		8413	8433	8453	
3.250	3-3/4		8400ZE	8420ZE	8440ZE	
3.500	3-1/2		8414	8434	8454	
3.750	3-3/4		8400ZG	8420ZG	8440ZG	
4.000	4		8415	8435	8455	

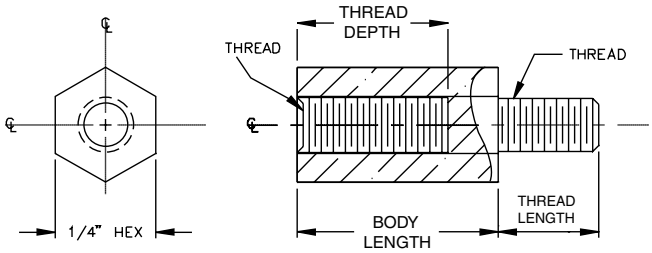

Aluminum: Standoffs provide a compromise between weight and strength. Although they cannot be provided in solderable finishes, they can be plated with special colored finishes besides the standard clear chromate. Anodized finishes have insulating characteristics when undamaged, and can be provided in a black matte, non-reflective surface. Aluminum is non-magnetic and can withstand severe conditions when properly finished.

BODY LENGTH		4-40	6-32	8-32
.250	1/4	8000C	8001C	8002C
.375	3/8	8000E	8001E	8002E
.500	1/2	8000G	8001G	8002G
.625	5/8	8000J	8001J	8002J
.750	3/4	8000L	8001L	8002L
.875	7/8	8000N	8001N	8002N
1.000	1	8000Q	8001Q	8002Q
1.125	1-1/8	8000R	8001R	8002R
1.250	1-1/4	8000S	8001S	8002S
1.375	1-3/8	8000T	8001T	8002T
1.500	1-1/2	8000U	8001U	8002U
1.625	1-5/8	8000V	8001V	8002V
1.750	1-3/4	8000W	8001W	8002W
2.000	2	8000Y	8001Y	8002Y
2.500	2-1/2	8000ZB	8001ZB	8002ZB
3.000	3	8000ZD	8001ZD	8002ZD

Thread Specs for Male/Female Standoffs (min)			
Thread Size	Body Length	Thread Depth	Thread Length
4-40	1/4"	1/8"	3/16"
	3/8" to 3"	1/4"	
6-32 & 8-32	1/4"	1/8"	1/4"
	3/8"	1/4"	
	1/2"	11/32"	3/8"
	5/8" to 3"	3/8"	

Nylon Round Spacers

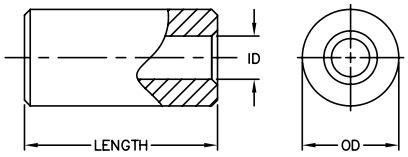

- Molded nylon 6/6.
- An excellent Insulator, the nylon spacer's surface lubricity allows wires to be routed against spacer without fear of chafing the insulation.
- Natural (milky white) finish.
- Relatively low operating temperature.

SCREW NO.	MAJOR DIA.	HOLE SIZE
#2	0.086	0.093
#3	0.099	0.100
#4	0.112	0.120
#5	0.125	0.130
#6	0.138	0.144
#8	0.164	0.169
#10	0.190	0.196
#12	0.216	0.220

LENGTH		O.D.	HOLE CLEARANCE SIZE				
			#2	#4	#6	#8	#10
0.125	1/8	3/16	9160	9180			
		1/4		4000	4001	4002	
		5/16			4065A	4067A	4069A
		3/8				4068A	4070A
0.187	3/16	3/16	9161	9181			
		1/4		4003	4004	4005	
		5/16			4065B	4067B	4069B
		3/8				4068B	4070B
0.25	1/4	3/16	9162	9182			
		1/4		4006	4007	4008	
		5/16			4065C	4067C	4069C
		3/8				4068C	4070C
0.312	5/16	3/16	9163	9183			
		1/4		4009	4010	4011	
		5/16			4065D	4067D	4069D
		3/8				4068D	4070D
0.375	3/8	3/16	9164	9184			
		1/4		4012	4013	4014	
		5/16			4065E	4067E	4069E
		3/8				4068E	4070E
0.437	7/16	3/16	9165	9185			
		1/4		4015	4016	4017	
		5/16			4065F	4067F	4069F
		3/8				4068F	4070F
0.5	1/2	3/16	9166	9186			
		1/4		4018	4019	4020	
		5/16			4065G	4067G	4069G
		3/8				4068G	4070G
0.562	9/16	3/16	9167	9187			
		1/4		4021	4022	4023	

LENGTH		O.D.	HOLE CLEARANCE SIZE				
			#2	#4	#6	#8	#10
.562	9/16	5/16			4065H	4067H	4069H
		3/8				4068H	4070H
.625	5/8	3/16	9168	9188			
		1/4		4024	4025	4026	
		5/16			4065J	4067J	4069J
		3/8				4068J	4070J
.687	11/16	3/16	9169	9189			
		1/4		4027	4028	4029	
		5/16			4065K	4067K	4069K
		3/8				4068K	4070K
.750	3/4	3/16	9170	9190			
		1/4		4030	4031	4032	
		5/16			4065L	4067L	4069L
		3/8				4068L	4070L
.812	13/16	3/16	9171	9191			
		1/4		4033	4034	4035	
		5/16			4065M	4067M	4069M
		3/8				4068M	4070M
.875	7/8	3/16	9172	9192			
		1/4		4036	4037	4038	
		5/16			4065N	4067N	4069N
		3/8				4068N	4070N
.937	15/16	3/16	9173	9193			
		1/4		4039	4040	4041	
		5/16			4065P	4067P	4069P
		3/8				4068P	4070P
1	1	3/16	9174	9194			
		1/4		4042	4043	4044	
		5/16			4065Q	4067Q	4069Q
		3/8				4068Q	4070Q

ROUND THREADED

LENGTH		O.D.	#4-40	#6-32	#8-32	#10-32
.250	1/4	1/4	4050	4051	4052	
		5/16			4071C	
		3/8				4072C
.375	3/8	1/4	4053	4054	4055	
		5/16			4071E	
		3/8				4072E
.500	1/2	1/4	4056	4057	4058	
		5/16			4071G	
		3/8				4072G
.625	5/8	1/4	4050J	4051J		
		5/16			4071J	
		3/8				4072J
.750	3/4	1/4	4059	4060	4061	
		5/16			4071L	
		3/8				4072L
.875	7/8	1/4	4050N	4051N		
		5/16			4071N	
		3/8				4072N
1.000	1	1/4	4062	4063	4064	
		5/16			4071Q	
		3/8				4072Q

HEX THREADED

LENGTH		O.D.	#4-40	#6-32	#8-32
.250	1/4	1/4	4300	4301	4302
.375	3/8		4303	4304	4305
.500	1/2		4306	4307	4308
.625	5/8		4300J	4301J	4073J
.750	3/4		4309	4310	4311
.875	7/8		4312	4313	4314
1.000	1		4315	4316	4317

HEX MALE / FEMALE

LENGTH		O.D.	#4-40	#6-32	#8-32
.250	1/4	1/4	4375	4376	4377
.375	3/8		4378	4379	4380
.500	1/2		4381	4382	4383
.625	5/8		4384	4385	4386
.750	3/4		4387	4388	4389
.875	7/8		4390	4391	4392
1.000	1		4393	4394	4395
1.125	1-1/8		4396	4397	4398
1.250	1-1/4		4399	4400	4401
1.375	1-3/8		4402	4403	4404
1.500	1-1/2		4405	4406	4407
1.625	1-5/8		4408	4409	4410
1.750	1-3/4		4411	4412	4413
2.000	2		4414	4415	4416

- An excellent insulator, the nylon spacer's surface lubricity allows wires to be routed against spacer without fear of chafing the insulation.
- Natural (milky white) finish.

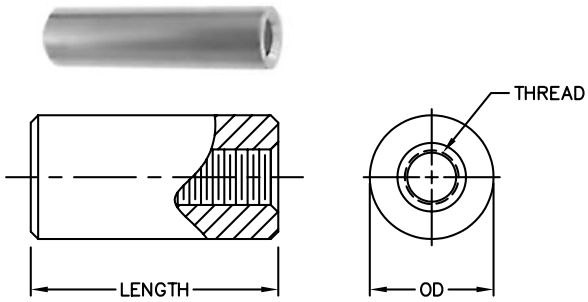

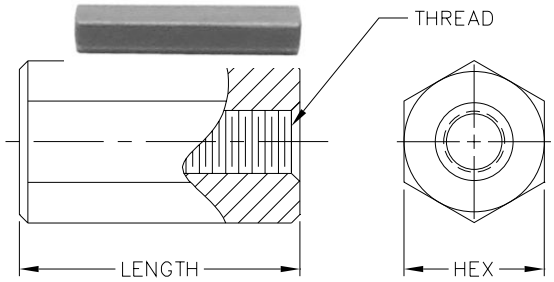

Maximum Thread Depth				
Thread Size	4-40	6-32	8-32	10-32
Thread Length Tapped Thru	1"	1"	1"	1"
Thread Length Tap each end	1/4"	7/16"	7/16"	1/2"

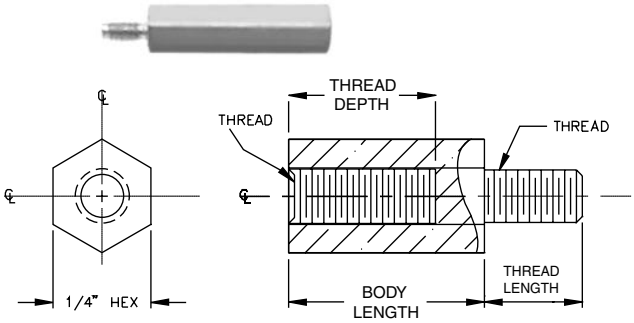

Thread Specs for Male/Female Standoffs (min)			
Thread Size	Body Length	Thread Depth	Thread Length
4-40	1/4"	1/8"	3/16"
	3/8" to 2"	1/4"	3/16"
6-32 & 8-32	1/4"	1/8"	1/4"
	3/8"	1/4"	1/4"
	1/2"	11/32"	3/8"
	5/8"-2"	3/8"	3/8"

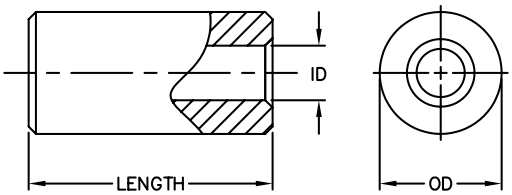

Phenolic: are made from paper-base, resin impregnated, heat-cured materials. High torque should not be applied to these spacers. They are the insulating spacer of choice when higher temperatures are encountered than can be withstood by nylon, or where greater strength without cold-flow is required.

- Parts are offered only as a spacer, non-threaded.

SCREW NO.	MAJOR DIA.	HOLE SIZE
#2	0.086	0.093
#3	0.099	0.100
#4	0.112	0.120
#5	0.125	0.130
#6	0.138	0.144
#8	0.164	0.169
#10	0.190	0.196
#12	0.216	0.220

LENGTH		O.D.	#2	#4	#6	#8	#10
.125	1/8	3/16	8040A	8041A			
		1/4		8140	8141		
		5/16				8042A	8043A
.187	3/16	3/16	8040B	8041B			
		1/4		8143	8144		
		5/16				8042B	8043B
.250	1/4	3/16	8040C	8041C			
		1/4		8146	8147		
		5/16				8042C	8043C
.312	5/16	3/16	8040D	8041D			
		1/4		8149	8150		
		5/16				8042D	8043D
.375	3/8	3/16	8040E	8041E			
		1/4		8152	8153		
		5/16				8042E	8043E
.437	7/16	3/16	8040F	8041F			
		1/4		8155	8156		
		5/16				8042F	8043F
.500	1/2	3/16	8040G	8041G			
		1/4		8158	8159		
		5/16				8042G	8043G
.562	9/16	3/16	8040H	8041H			
		1/4		8161	8162		
		5/16				8042H	8043H
.625	5/8	3/16	8040J	8041J			
		1/4		8164	8165		
		5/16				8042J	8043J
.687	11/16	3/16	8040K	8041K			
		1/4		8167	8168		
		5/16				8042K	8043K
.750	3/4	3/16	8040L	8041L			
		1/4		8170	8171		
		5/16				8042L	8043L
.812	13/16	3/16	8040M	8041M			
		1/4		8173	8174		
		5/16				8042M	8043M
.875	7/8	3/16	8040N	8041N			
		1/4		8176	8177		
		5/16				8042N	8043N
.937	15/16	3/16	8040P	8041P			
		1/4		8179	8180		
		5/16				8042P	8043P
1.000	1	3/16	8040Q	8041Q			
		1/4		8182	8183		
		5/16				8042Q	8043Q

PART NO.	LENGTH	O.D.	THREAD SIZE	THREAD DEPTH	MIL NUMBER
2640	1/4	1/4	6-32	THRU	
2642	3/8	3/8		5/32	
2641	1/2	1/4			
2643		3/8		5/32	
2600				5/32	NL523 W01 004
2644		1/2		9/64	
2601	5/8	3/8		1/4	NL523 W01 005
2607		1/2	8-32	3/16	NL523 W02 005
2602	3/4	3/8	6-32	1/4	NL523 W01 006
2645		1/2			
2608			8-32		NL523 W02 006
2603	1	3/8	6-32	3/8	NL523 W01 008
2646		1/2			
2609			8-32		NL523 W02 008
2615		3/4	10-32		NL523 W03 008
2604	1-1/4	3/8	6-32		NL523 W01 010
2610		1/2	8-32		NL523 W02 010
2616		3/4	10-32		NL523 W03 010
2622		1	1/4-20	7/16	NL523 W04 010
2647	1-1/2	1/2	6-32	9/16	
2605		3/8		3/8	NL523 W01 012
2611		1/2	8-32		NL523 W02 012
2617		3/4	10-32		NL523 W03 012
2623		1	1/4-20	1/2	NL523 W04 012
2606	2	3/8	6-32	3/8	NL523 W01 016
2612		1/2	8-32		NL523 W02 016
2618		3/4	10-32		NL523 W03 016
2624		1	1/4-20	5/8	NL523 W04 016
2648	2-1/2	1/2	6-32	1/2	
2613			8-32	3/8	NL523 W02 020
2619		3/4	10-32		NL523 W03 020
2649			1/4-20	3/4	
2625		1		5/8	NL523 W04 020
2614	3	1/2	8-32	3/8	NL523 W02 024
2620		3/4	10-32		NL523 W03 024
2626		1	1/4-20	5/8	NL523 W04 024
2650	4	3/4		3/4	
2621			10-32	3/8	NL523 W03 032
2627		1	1/4-20	5/8	NL523 W04 032
2628	5				NL523 W04 040
2629	6				NL523 W04 048

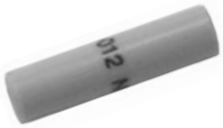

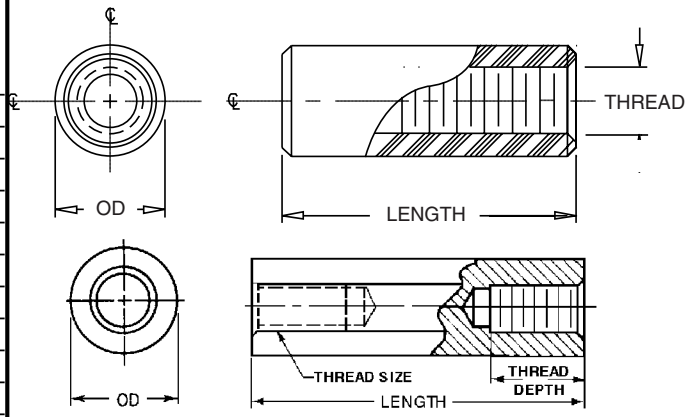

- Ceramic standoffs are Grade L-5 Steatite, glazed and fired at high temperature.
- Threaded from each end as indicated in table.
- The ideal Insulator, Steatite exhibits exceptional strength in compression and tension, but is weak in shear (torsion), as are all glass-type materials.
- Continuous safe operating temperature rating of 930°C (1700°F).

SCREW NO.	MAJOR DIA.	HOLE SIZE
#2	0.086	0.093
#3	0.099	0.100
#4	0.112	0.120
#5	0.125	0.130
#6	0.138	0.144
#8	0.164	0.169
#10	0.190	0.196
#12	0.216	0.220

Numeric Index

DECIMAL EQUIVALENTS OF PARTS OF AN INCH

	1/64	.015625
1/32	-----	.03125
	3/64	.04687
1/16	-----	.0625
	5/64	.078125
3/32	-----	.09375
	7/64	.109375
1/8	-----	.125
	9/64	.140625
5/32	-----	.15625
	11/64	.171875
3/16	-----	.1875
	13/64	.203125
7/32	-----	.21875
	15/64	.234375
1/4.	-----	.25
	17/64	.265625
9/32	-----	.28125
	19/64	.296875
5/16	-----	.3125
	21/64	.328125
11/32		.34375
	23/64	.359375
3/8	-----	.375
	25/64	.390625
13/32	-----	.40625
	27/64	.421875
7/16	-----	.4375
	26/64	.453125
15/32	-----	.46875
	31/64	.484375
1/2	-----	.5
	33/64	.515625
17/32	-----	.53125
	35/64	.546875
9/16	-----	.5625
	37/64	.578125
19/32	-----	.59375
	39/64	.609375
5/8	-----	.625
	41/64	.640625
21/32	-----	.65625
	43/64	.671875
11/16	-----	.6875
	45/64	.703125
23/32	-----	.71875
	47/64	.734375
3/4	-----	.75
	49/64	.765625
25/32	-----	.78125
	51/64	.796875
13/16	-----	.8125
	53/64	.828125
27/32	-----	.84375
	55/64	.859375
7/8	-----	.875
	57/64	.890625
29/32	-----	.90625
	59/64	.921875
15/16	-----	.9375
	61/64	.953125
31/32	-----	.96875
	63/64	.984375
	1	1.

TECHNICAL INFORMATION

MACHINE SCREW SIZES & STUD HOLE TABLE

SCREW NO.	MAX DIAMETER	HOLE SIZE
#2	.0860	.093
#3	.0990	.100
#4	.1120	.120
#5	.1250	.130
#6	.1380	.144
#8	.1640	.169
#10	.1900	.196
#12	.2160	.220

COPPER MEASURING CHART FOR USE WITH MICOMETER

18 Ga	20 Ga.	21 Ga.	22 Ga.	23 Ga.	24 Ga.	25 Ga.
7/26 10/28 16/30 19/. 009 41/34 65/36 20/31	7/28 10/30 16/32 20/33 26/34 41/36	7/29 7/. 0117 10/31 20/34	7/30 7/. 0092 7/. 0096 8/31 10/32 14/33 16/34 26/36	7/31 8/. 008 10/33 13/34 20/36	7/32 16/36	7/34

Sizes:
#26-.0159 #28-.0126 #30-.010 #32-.0079 #34-.0063 #36- 0050
#27-.0142 #29-.0113 #31-.0089 #33-.0071 #65-.0056

ie; 7/26 means 7 strands of number 26 wire which makes 18 gauge wire

CONDUCTOR

AWG	Solid Diameter	STRANDED		Diameter Over Strand Conductor
		No. of Strands	Dia. of Strands	
30	.010	7	.004	.014
28	.012	7	.005	.016
26	.015	7	.006	.020
24	.200	7	.008	.025
24		16	.006	.025
22	.024	7	.010	.033
20	.032	10	.010	.041
18	.040	16	.010	.052
16	.050	19	.011	.065
14	.065	19	.014	.078

mm	Inch
0.1	0.004
0.2	0.008
0.3	0.012
0.4	0.016
0.5	0.020
0.6	0.024
0.7	0.028
0.8	0.031
0.9	0.035
1	0.039
1.1	0.043
1.2	0.047
1.3	0.051
1.4	0.055
1.5	0.059
1.6	0.063
1.7	0.067
1.8	0.071
1.9	0.075
2	0.079
2.1	0.083
2.2	0.087
2.3	0.091
2.4	0.094
2.5	0.098
2.6	0.102
2.7	0.106
2.8	0.110
2.9	0.114
3	0.118

Aero-Space Southwest, Inc.
21450 N. Third Avenue
Phoenix, AZ 85027

Tel: (800) 289-2779 • Fax: (623) 582-2019
www.aerospacesw.com

Allied Electronics
7410 Pebble Drive
Fort Worth, TX 76118

Tel: (800) 433-5700 • Fax: (817) 595-6444
www.alliedelec.com

Bisco Industries, Inc.
1500 N. Lakeview Ave
Anaheim, CA 92807

Tel: (800) 323-1232 • Fax: (714) 876-2410
www.biscoind.com

D.B. Roberts Co.
18 Terry Avenue
Burlington, MA 01803

Tel: (800) 800-6887 • Fax: (781) 273-0110
www.dbroberts.com

Electronic Hardware Ltd.
13257 Saticoy Street
North Hollywood, CA 91605

Tel: (818) 982-6100 • Fax: (818) 764-1889
www.electronichardware.com

Force Electronics, Inc.
6701 Katella Ave, Suite 200
Cypress, CA 90630

Tel: (888) 411-3672 • Fax: (714) 220-1324
www.force-elec.com

Heilind Electronics, Inc.
58 Jonspin Road
Wilmington, MA 01887

Tel: (800) 400-7041 • Fax: (978) 658-0278
www.heilind.com

Leff Electronic Inc.
455 North Center Avenue
New Stanton, PA 15672

Tel: (724) 925-3001 • Fax: (724) 925-3002
www.leff.com

Master Distributors
1220 Olympic Blvd.
Santa Monica, CA 90404

Tel: (310) 452-1229 • Fax: (310) 399-8600
www.masterdistributors.com

Newark InOne
4801 N. Ravenswood Ave.
Chicago, IL 60640-4496

Tel: (800) 463-9275 • Fax: (888) 551-4801
www.newarkinone.com

Genie Group, Inc.
300 Beasley Drive
Franklin, TN 37064

Tel: (615) 771-9412 • Fax: (800) 322-3113
www.geniegroup.com

Tresco
736 Greenway Road, PO Box 1860
Boone, NC 28607

Tel: (800) 752-8708 • Fax: (828) 264-7204
www.tresco.com

ABBATRON
HH Smith

632 Arch Street Meadville, PA 16335
1-888-847-6484 • www.abbatron.com

Products in this catalog are available through: