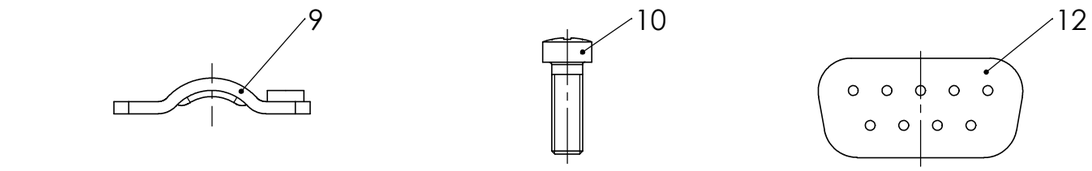

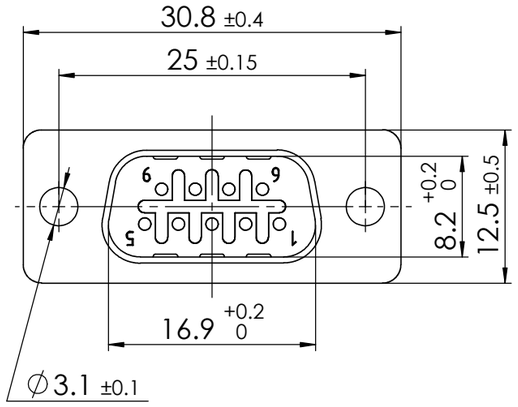

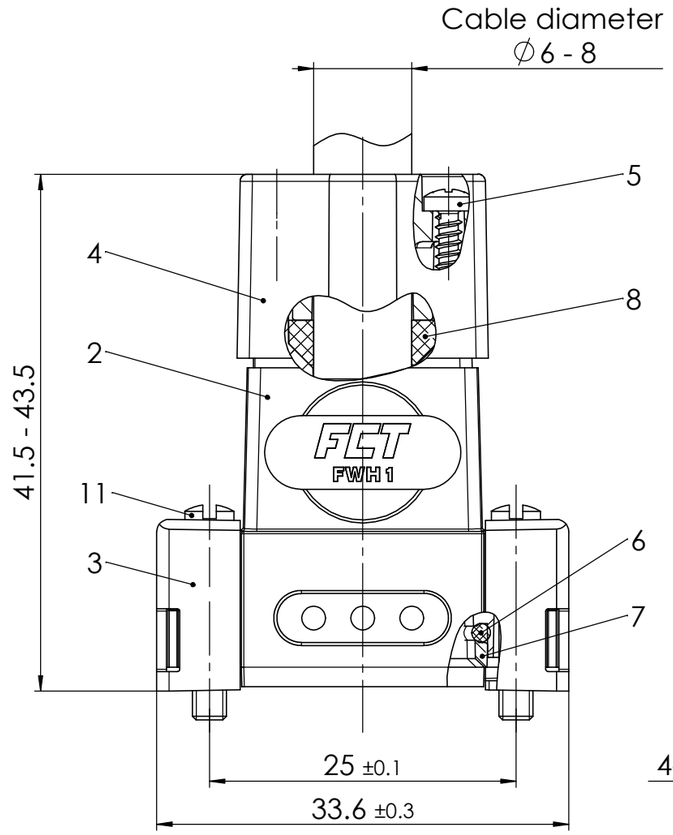

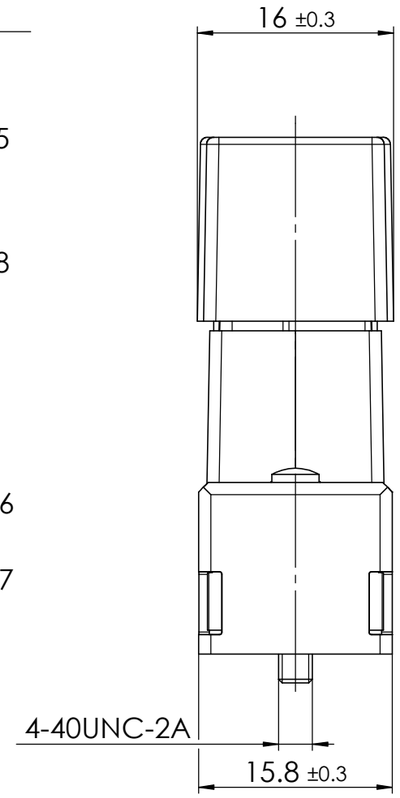

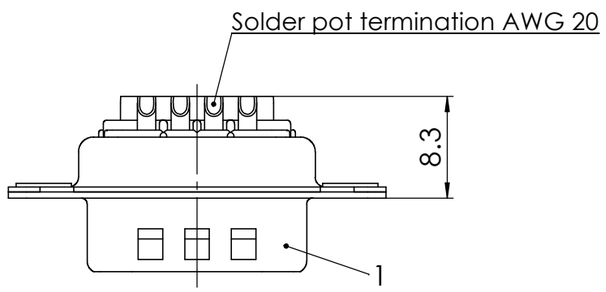

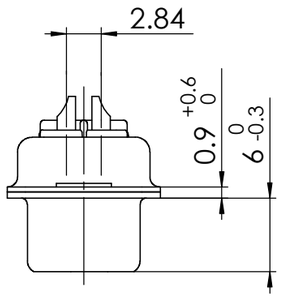

No.	St.	Part	Type Description/Material	Surface plating/Colour/Class
12	1	Front seal	Elastomer	black
11	2	Locking screw	FVS1/5 4-40 / Brass	nickel plated
10	2	Cable clamp screw	Steel	zinc plated
9	2	Cable clamp	Steel	zinc plated
8	1	Seal ring	Elastomer	black
7	1	Holding frame	PBT	black
6	1	O-ring seal	Elastomer	red
5	2	Shell screw	Stainless steel	blank
4	1	Hood cap	PC+ABS	black
3	2	Holding cap	PEI	black
2	1	Hood	FWH1 / PC+ABS	black
1	1	Waterproof D-Sub Connector	F09P-K700	

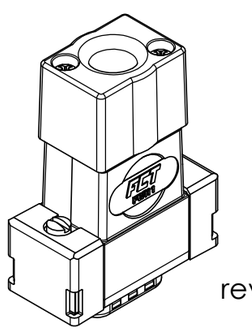

reverse side
1 : 1

RoHS compliant
by exemption

max. torque are 40 Nm
Mounting instruction AM0324
Parts-No. 3, 9, 10 and 12 not mounted

Protection standard IP67
according to DIN EN 60529

SYMBOLS

THIS DRAWING CONTAINS INFORMATION THAT IS PROPRIETARY TO MOLEX ELECTRONIC TECHNOLOGIES, LLC AND SHOULD NOT BE USED WITHOUT WRITTEN PERMISSION

DIMENSION UNITS: mm
SCALE: 2:1
MEASUREMENTS WITHOUT TOLERANCE ACC. TO ISO 2768-m

CURRENT REVISION
DRWN: DRAWN BY ameyerrichte 28-08-2019
APPR: APPR BY HStanisch 28-08-2019

INITIAL REVISION
DRWN: DRAWN BY ameyerrichte 28-08-2019
APPR: APPR BY HStanisch 28-08-2019

REV.	CH.-NO.
1	24143

REPLACEMENT FOR: FWHy-xxP-3649_rev3
THIRD ANGLE PROJECTION
DRAWING: A3-SIZE

molex

FCT-Hood Connector Set
waterproof

PRODUCT CUSTOMER DRAWING

MATERIAL NUMBER: 1731140384
REVISION: 1
DOCUMENT NUMBER: FWH1-09P-3649
CUSTOMER: GENERAL MARKET
SHEET NUMBER: 1 OF 1

COMMENT:
ALL RIGHTS ARE RESERVED BY US FOR THIS DRAWING, WITHOUT OUR PRIOR CONSENT,
IT MAY NEITHER BE DUBLICATED NOR MADE AVAILABLE TO A THIRD PARTY,
AND IT ALSO MAY NOT BE IMPROPERLY USED BY TE RECEIVER, OR A THIRD PARTY.