Line laser, green, 532nm, 90°, 50mW

LD532-50-230(40x210)
Order Number: 70112764

Main Parameters (*)	min	typ	max	Unit
Wavelength		532		nm
Optical Output Power		50		mW
Operating Voltage	207	230	253	V AC
Operating Current	5	10	15	mA
Operating Temperature	15		30	°C
Storage Temperature	-40		80	°C

Technical Parameters	
Lifetime	>10000h
RoHS	yes

Optical Parameters	
Beam Shape	Line
Laser Class	2M
Divergence	D - 0.5mrad
Fan Angle	90°
Line Thickness	<3mm@7m
Operating Distance	30m
Optics	glass lens AR coated
Beam Mode	TEM00
Laser technology	YVO4+KTP
Stability	+/- 20% @ 15-30°C
Focus	fixed (7.0m)
Warm up time	<15min

Electrical Parameters	
Potential of Housing	isolated
Connector	AC CEE 7/7

Mechanical Parameters	
Size	Ø40x210mm
Material	aluminium
Cable length	1750mm
Wire type	H05VV-F
Output Aperture	8mm
Weight	920g

(*) Over the complete operating temperature range

Features

- Operating Voltage 230V AC
- Glas lenses anti reflex coated
- Laser Class 2M
- High power
- Uniform line thickness

Picture

Montageplatte optional
Base Plate not included

Drawing

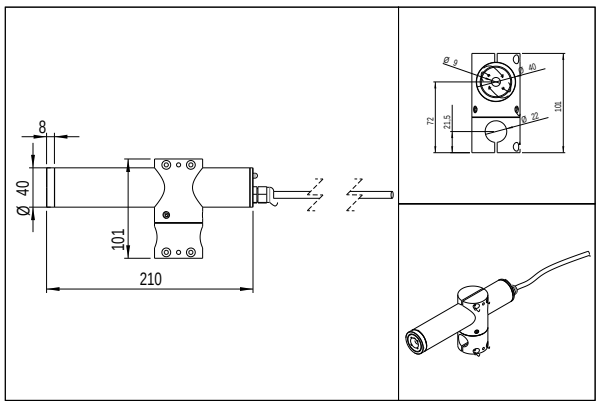

Safety Label

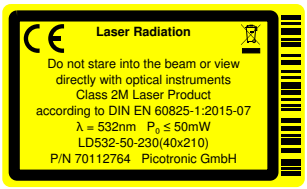

Revision

REV 7 | 28-NOV-2017

Picotronic GmbH
Rudolf-Diesel-Str. 2a
56070 Koblenz
Germany

Geschäftsführer
David Heckner

FON +49(0)261-983 497-0
FAX +49(0)261-983 497-10
www.picotronic.de
info@picotronic.de

Sparkasse Koblenz
BLZ 570 501 20, **KTO** 211 003
BIC/IBAN MALADE51KOB
DE41 5705 0120 0000 2110 03

Postbank Stuttgart
BLZ 600 100 70, **KTO** 770 787 04
BIC/IBAN PBNKDEFF
DE41 6001 0070 0077 0787 04

USt-IdNr. DE814473445
Amtsgericht Koblenz HRB 20026
WEEE-Reg.-Nr. DE85231360

Pico Group® member