Line laser, green, 532 nm, 90 °, 50 mW

LD532-50-5(85x50x40)
Order Number: 70107562

Main Parameters (*)	min	typ	max	Unit
Wavelength		532		nm
Optical Output Power		50		mW
Operating Voltage	4.5	5	5.5	V DC
Operating Current	250	500	750	mA
Operating Temperature	15		30	°C
Storage Temperature	-40		80	°C

Main Data

Warranty	1 years

Technical Parameters

Lifetime	> 5,000 h
RoHS	yes

Optical Parameters

Beam Shape	Line
Laser Class	2M
Divergence	D - 0.5 mrad
Fan Angle	90 °
Line Thickness	<3mm@5m
Operating Distance	10 m
Optics	glass lens AR coated
Beam Mode	TEM00
Laser technology	Solid State (YVO4+KTP)
Stability	+/- 10% @ 15-30°C
Focus	fixed (5.0m)
Warm up time	< 15 min

Electrical Parameters

Potential of Housing	isolated
Power Supply	LFNT-5

Mechanical Parameters

Size	85x50x40 mm
Material	aluminium
Cable length	100 mm
Wire type	Belden, Typ 1007, 26AWG
Output Aperture	5 mm
Housing Color	black
Weight	300 g
PCB	yes
PCB size	35x35x2 mm
Stripping of wire	5 mm

(*) Over the complete operating temperature range

Features

- Operating Voltage 5 V DC
- Laser Class 2M
- Uniform line thickness
- Fixed focus
- Small laser head

Picture

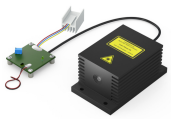

Cable color

Ground		blue	GND
positive		red	4.5 - 5.5, typ 5 V DC

Drawing

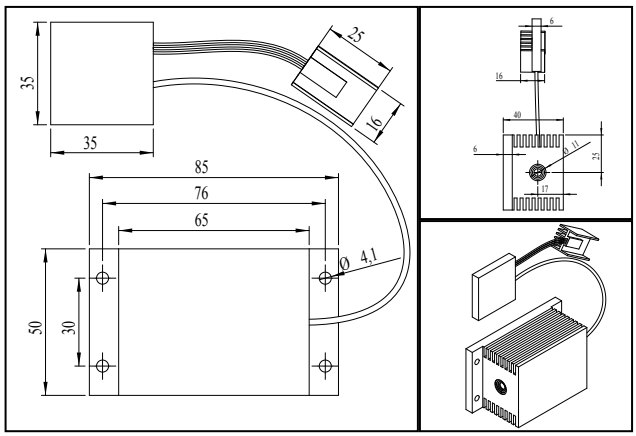

Saftey Label

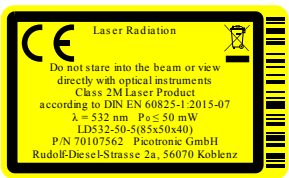

Valid Revision

12 | 29-JAN-2016