A

LCBS Series
Locking Circuit Board Support

Patent Nos. 3,777,052 & 3,909,883

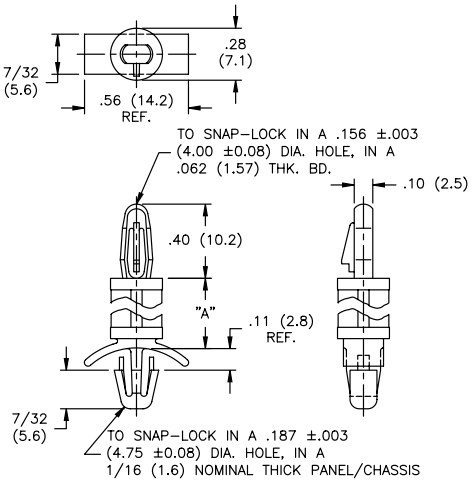

Mat'l: Nylon 6/6, RMS-01 Color: Natural Part Number	Mat'l: Flame Ret. Nyl. 6/6, RMS-19 Color: White Part Number	Standard Pack: 1,000 per bag "A" ± .015 (0.4)
LCBS-3-01	LCBS-3-19	3/16 (4.8)
LCBS-4-01	LCBS-4-19	1/4 (6.4)
LCBS-5-01	LCBS-5-19	5/16 (7.9)
LCBS-6-01	LCBS-6-19	3/8 (9.5)
LCBS-7-01	LCBS-7-19	7/16 (11.1)
LCBS-8-01	LCBS-8-19	1/2 (12.7)
LCBS-10-01	LCBS-10-19	5/8 (15.9)
LCBS-12-01	LCBS-12-19	3/4 (19.1)
LCBS-14-01	LCBS-14-19	7/8 (22.2)
LCBS-16-01	LCBS-16-19	1 (25.4)
LCBS-18-01	LCBS-18-19	1-1/8 (28.6)
LCBS-20-01	LCBS-20-19	1-1/4 (31.7)
LCBS-22-01	LCBS-22-19	1-3/8 (34.9)
"Impact Modified" Nylon 6/6, RMS-73 material available by special order. To order, replace -01 with -73.		

CBS Series
Circuit Board Support

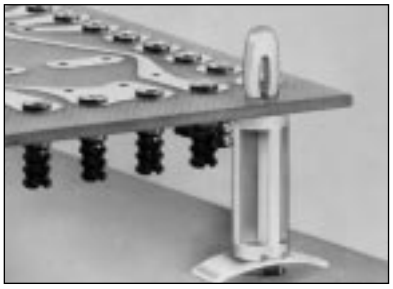

Patent Nos. 3,688,635

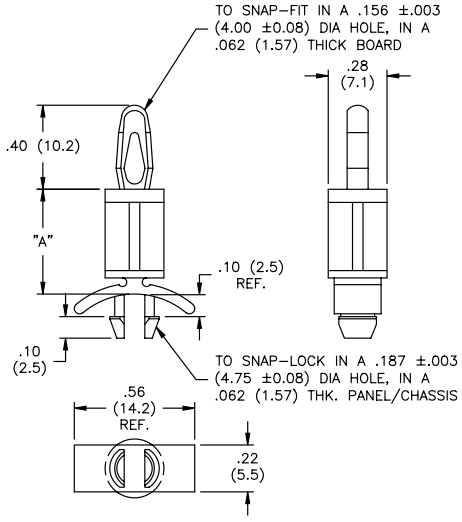

Mat'l: Nylon 6/6, RMS-01 Color: Natural Part Number	Mat'l: Flame Ret. Nyl. 6/6, RMS-19 Color: White Part Number	Standard Pack: 1,000 per bag "A" ± .015(0.4)
CBS-3-01	CBS-3-19	3/16 (4.8)
CBS-4-01	CBS-4-19	1/4 (6.4)
CBS-6-01	CBS-6-19	3/8 (9.5)
CBS-8-01	CBS-8-19	1/2 (12.7)
CBS-10-01	CBS-10-19	5/8 (15.9)
CBS-12-01	CBS-12-19	3/4 (19.1)
CBS-14-01	CBS-14-19	7/8 (22.2)

LNCBS Series
Long Nose Circuit Board Support

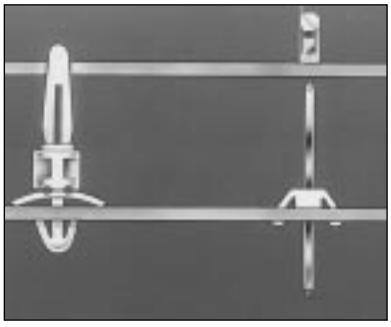

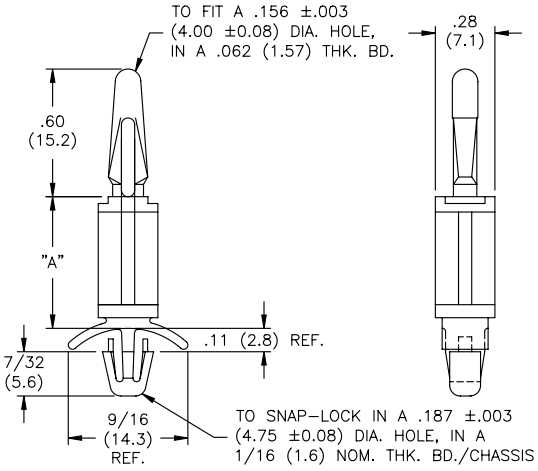

Highlights

- Automatically locates and aligns connector pins with socket.

Mat'l: Nylon 6/6, RMS-01 Color: Natural Part Number	Mat'l: Flame Ret, Nyl. 6/6, RMS-19 Color: White Part Number	Standard Pack: 1,000 per bag "A" ± .015(0.4)
LNCBS-3-01	LNCBS-3-19	3/16 (4.8)
LNCBS-4-01	LNCBS-4-19	1/4 (6.4)
LNCBS-6-01	LNCBS-6-19	3/8 (9.5)
LNCBS-8-01	LNCBS-8-19	1/2 (12.7)
LNCBS-10-01	LNCBS-10-19	5/8 (15.9)
LNCBS-12-01	LNCBS-12-19	3/4 (19.1)
LNCBS-14-01	LNCBS-14-19	7/8 (22.2)