GB

750W DUST

EXTRACTOR

79359 - DE750A SPARE PARTS DRAWING

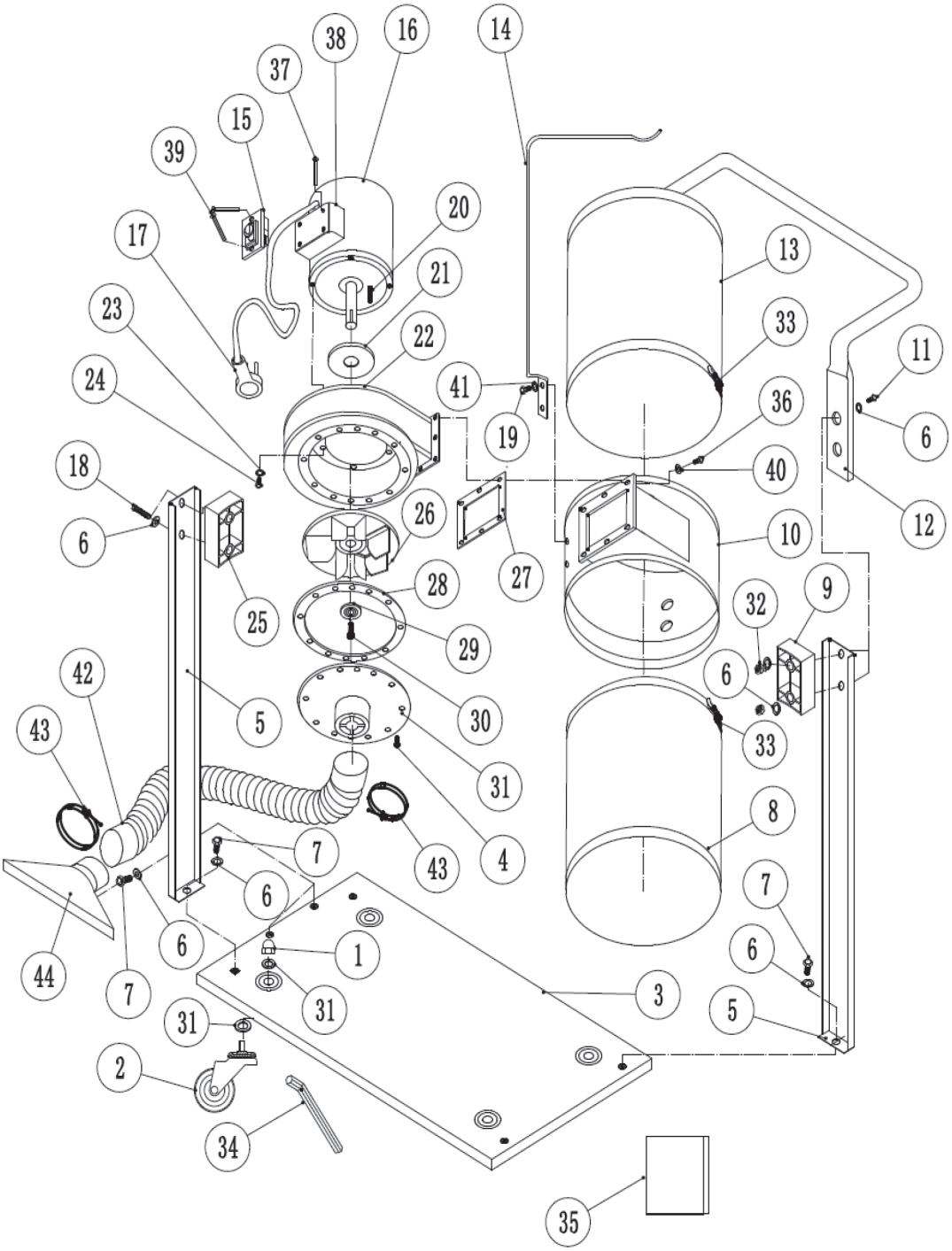

Helpline: +44 (0) 23 8049 4344 Sales Desk: +44 (0) 23 8049 4333 General Enquiries: +44 (0) 23 8026 6355 internet: drapertools.com email: sales@drapertools.com

Draper Tools Limited, Hursley Road, Chandler's Ford, Eastleigh, Hampshire. SO53 1YF UK.

DRAPER®

GB

750W DUST

EXTRACTOR

79359 - DE750A SPARE PARTS DRAWING

KEY No.	PART No.	STOCK No.	DESCRIPTION
1	YDE750A-01	81069	Nut
2	YDE750A-02	81070	Castor
3	YDE750A-03	81071	Base
4	YDE750A-04	81072	Pan screw
5	YDE750A-05	81073	Support rod
6	YDE750A-06	81074	Washer
7	YDE750A-07	81075	Hex screw
8	YDE750A-08	81076	Collector bag
9	YDE750A-09	81079	Collector block
10	YDE750A-10	81080	Filtration housing
11	YDE750A-11	81081	Hex screw
12	YDE750A-12	81082	Handle
13	YDE750A-13	81083	Filter bag
14	YDE750A-14	81084	Verticle stand
15	YDE750A-15	81085	Switch
16	YDE750A-16	81086	Motor
17	YDE750A-17	81087	Power cord
18	YDE750A-18	81089	Hex screw
19	YDE750A-19	81090	Pan screw
20	YDE750A-20	81091	Key
21	YDE750A-21	81092	Packing
22	YDE750A-22	81093	Fan housing
23	YDE750A-23	81097	Spring washer
24	YDE750A-24	81098	Hex screw
25	YDE750A-25	81099	Block
26	YDE750A-26	81100	Fan
27	YDE750A-27	81101	Gasket
28	YDE750A-28	81102	Gasket
29	YDE750A-29	81103	Washer
30	YDE750A-30	81104	Hex screw
31	YDE750A-31	81105	Inlet
32	YDE750A-32	81106	Nut
33	YDE750A-33	81107	Bag clamp
34	YDE750A-34	81112	Hex key
36	YDE750A-36	81117	Hex screw
37	YDE750A-37	81120	Pan screw

KEY No.	PART No.	STOCK No.	DESCRIPTION
38	YDE750A-38	81122	Switch cover
39	YDE750A-39	81123	Cross slot screw
40	YDE750A-40	81125	Washer
41	YDE750A-41	81126	Washer
42	YDE750A-42	81127	Hose
43	YDE750A-43	81129	Hose clamp
44	YDE750A-44	81132	Floor sweeper

Helpline: +44 (0) 23 8049 4344 Sales Desk: +44 (0) 23 8049 4333 General Enquiries: +44 (0) 23 8026 6355 internet: drapertools.com email: sales@drapertools.com

Draper Tools Limited, Hursley Road, Chandler's Ford, Eastleigh, Hampshire. SO53 1YF UK.