Alle Rechte vorbehalten/ *All rights reserved*

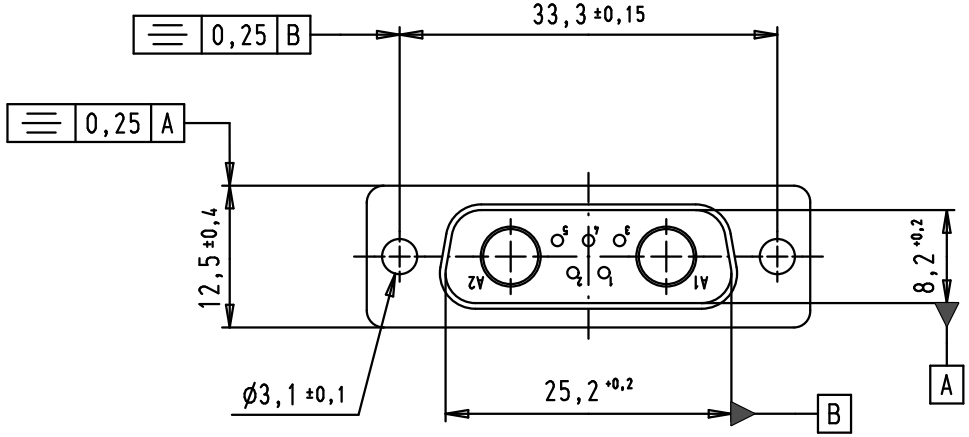


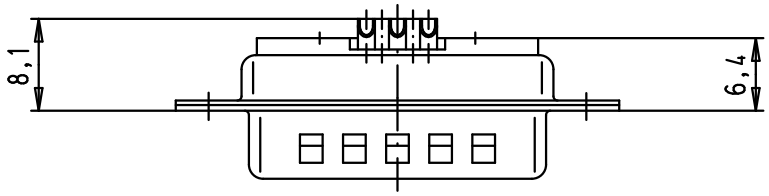


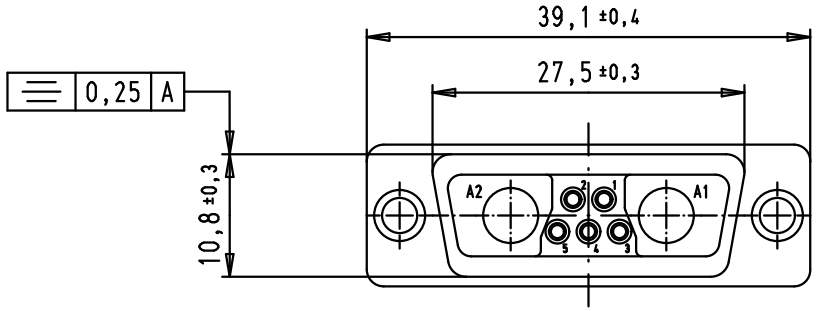


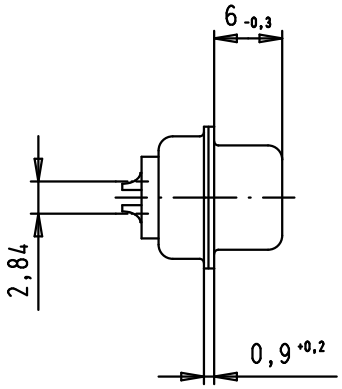


Solder bucket termination for AWG 20

| | |
|---|---|
| 09 69 211 7072 | PL3 |
| 09 69 211 5072 | S4 |
| Part number | Performance level |

| | | |
|---|---|---|
| 34614 | 21/09/07 | PK |
| Mod. | Dat. | Name |

| | Dat. | Name |
|---|---|---|
| Detail. | 21/09/07 | PK |
| Insp. | | |
| Stand. | | |

All Dim. in mm
Orig. Size DIN A 4

HARTING EURL
F-95972 Paris

D-Sub, 7W2, male, straight, solder buckets, tin plated shell with dimples

Maßstab/ *Scale* 1,5:1

TB 09 69 211 X072

Sub.

Blatt/ *Page* 1/1