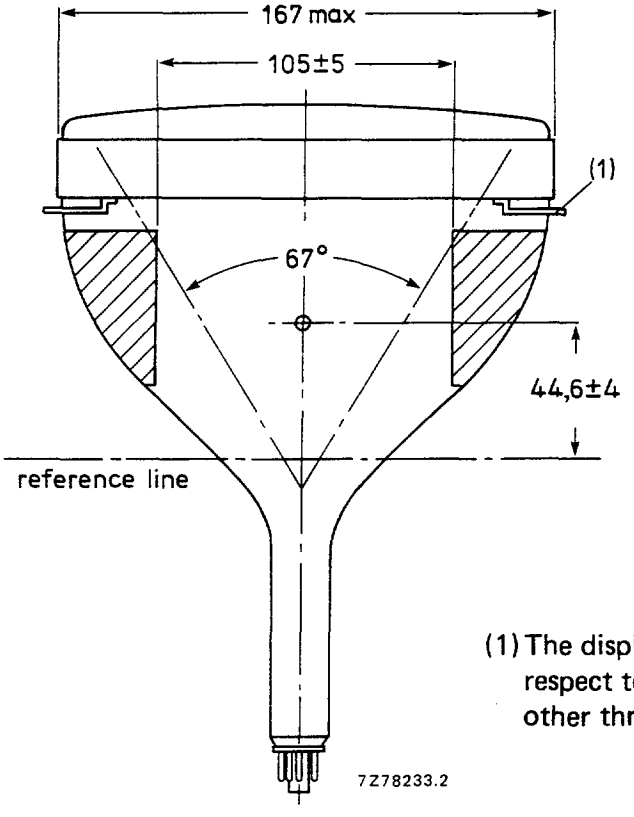

(1) The displacement of any lug with respect to the plane through the other three lugs is max. 1,8 mm.

Fig. 9.

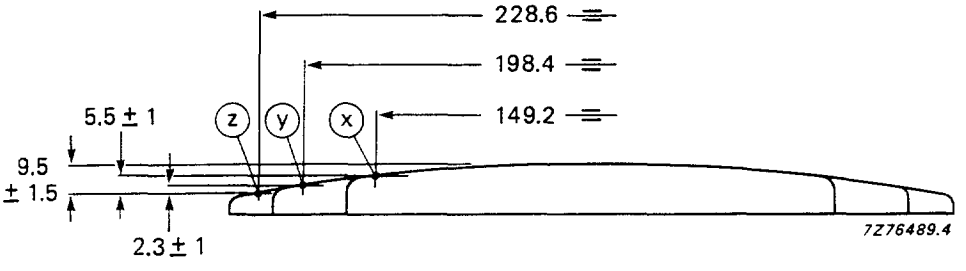

Fig. 10 Screen reference points.

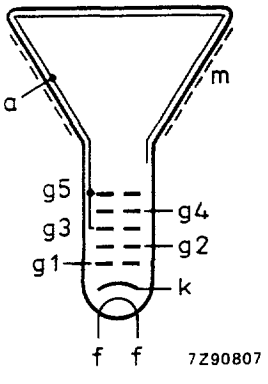

Fig. 11 Electrode configuration.

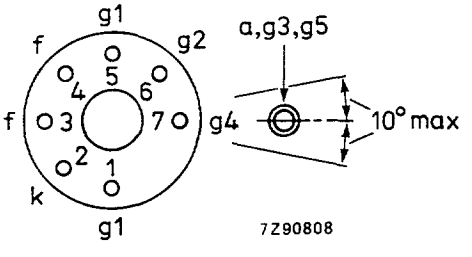

Fig. 12 Pin arrangement.

HIGH RESOLUTION MONOCHROME DISPLAY TUBES

- For Data Graphic Displays
- 90° deflection angle
- 24 cm (9 in) face diagonal; rectangular glass
- 20 mm neck diameter
- Integral implosion protection

QUICK REFERENCE DATA

Deflection angle	90°
Face diagonal	24 cm (9 in)
Overall length	max. 227 mm
Neck diameter	20 mm
Heating	12 V/130 mA
Quick heating cathode	with a typical tube a legible picture will appear within 5 s
Grid 2 voltage	400 V
Anode voltage	12 kV
Resolution	approx. 1300 lines

APPLICATION

These high resolution tubes are for alpha-numeric and graphic display applications, such as computer terminals, small business computers, etc.

AVAILABLE VERSIONS

The following versions are available: M24-306, M24-308, M24-310 and M24-328. Differences between the tubes can be found under 'Dimensional data'.

The tubes can be supplied with different phosphors and anti-reflective treatments, see "High resolution monochrome display tubes, General".

ELECTRICAL DATA

Focusing method	electrostatic
Deflection method	magnetic
Deflection angles	
diagonal	approx. 90°
horizontal	approx. 82°
vertical	approx. 67°
Direct interelectrode capacitances	
cathode to all other electrodes	max. 4 pF
grid 1 to all other electrodes	max. 7 pF
Capacitance of external conductive coating to anode*	max. 850 pF min. 300 pF
Capacitance of external conductive coating to anode**	max. 750 pF min. 300 pF
Capacitance of anode to implosion protection hardware**	approx. 100 pF
Heater voltage	12 V
Heater current at 12 V	130 mA

OPTICAL DATA

Phosphor type	see "High resolution monochrome display tubes, General"
Light transmission at screen centre	
tube with normal tinted face glass	approx. 53%
tube with dark tinted face glass	approx. 42%

RASTER CENTRING

The field intensity perpendicular to the tube axis should be adjustable from 0 to 800 A/m. For optimum overall sharpness it is recommended to centre the raster electrically via the deflection coils.

* Implosion protection hardware connected to external conductive coating.
** Implosion protection hardware not connected to external conductive coating.

MECHANICAL DATA (see also the figures under Dimensions Data)

Overall length	max. 227 mm
Greatest dimensions of tube	
diagonal	248,5 mm
width	216 mm
height	167 mm
Minimum useful screen dimensions (projected)	
diagonal	222,5 mm
horizontal axis	193 mm
vertical axis	145 mm
area	268 cm^2
Implosion protection	T-band
Bulb	EIAJ-JB240AA03 or EIAJ-JB240AA04
Bulb contact designation	IEC 67-III-2, EIA-J1-21
Base designation	EIA E7-91
Casing	7GR
Mass	approx. 1,8 kg

RATINGS (Absolute Maximum System)

Unless otherwise specified voltage values are positive and measured with respect to grid 1.

Anode voltage	max. 15 kV min. 9,5 kV
Grid 4 (focusing electrode) voltage	−200 to + 1000 V
Grid 2 voltage	max. 700 V
Anode current	
long-term average value	max. 130 μA
peak value	max. 600 μA
Cathode voltage, positive peak value	max. 400 V
Heater voltage	12 V ± 10% *
Cathode-to-heater voltage	max. 100 V

CIRCUIT DESIGN VALUES

Grid 4 current		
positive	max.	25 μA
negative	max.	25 μA
Grid 2 current		
positive	max.	5 μA
negative	max.	5 μA

MAXIMUM CIRCUIT VALUES

Resistance between cathode and heater	max.	1,0 MΩ
Impedance between cathode and heater	max.	0,1 MΩ
Grid 1 circuit resistance	max.	1,5 MΩ
Grid 1 circuit impedance	max.	0,5 MΩ

TYPICAL OPERATING CONDITIONS

Cathode drive; voltages specified with respect to grid 1

Anode voltage	12 kV
Grid 4 (focusing electrode) voltage	0 to 300 V*
Grid 2 voltage	400 V
Cathode cut-off voltage	30 to 60 V**

Grid drive; voltages specified with respect to cathode

Anode voltage	12 kV
Grid 4 (focusing electrode) voltage	0 to 300 V*
Grid 2 voltage	400 V
Grid 1 cut-off voltage	34 to 64 V**

RESOLUTION

The resolution is approx. 1300 lines. It is measured at the screen centre:

- with shrinking raster method,
- at light output 68,5 cd/m^2 (20 foot lambert) and raster dimensions 168 mm x 126 mm,
- at V_{g2} = 700 V and anode voltage = 12 kV,
- with phosphor type W (WW),
- with normal tinted face glass, without anti-glare treatment of screen surface.

X-RADIATION CHARACTERISTIC

X-radiation emitted will not exceed 0,5 mR/h throughout the usefull life of the tube, when operated within the given ratings.

* Measured at screen centre on spot at anode current = 250 μA (peak), anode voltage = 12 kV, grid 2 voltage = 400 V.
Dynamic focus (only for optimization): Typical correction for a video field of H x V = 168 mm x 126
line parabola 200 V;
field parabola 100 V.

**Visual extinction of focused raster.

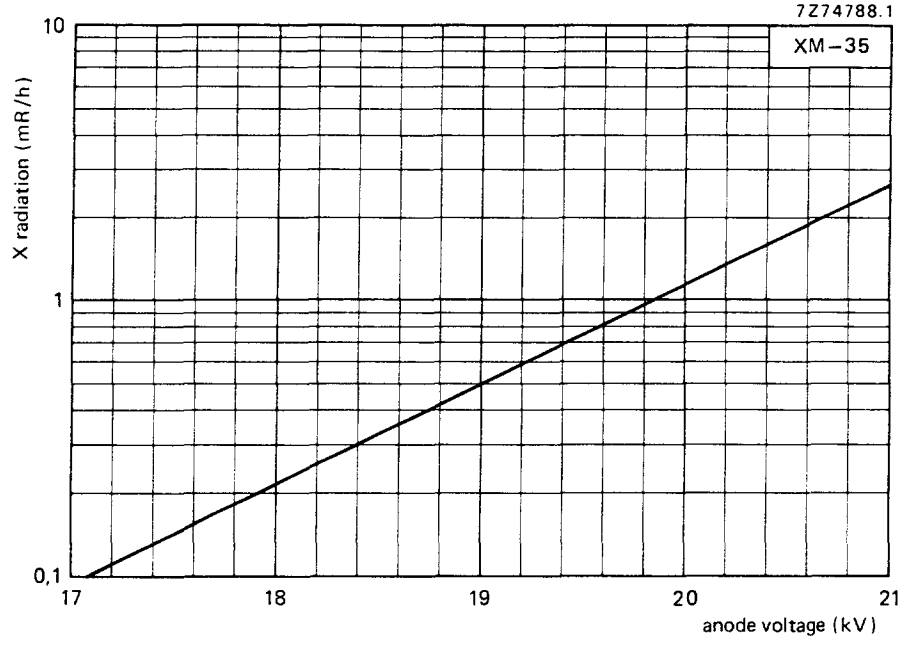

Fig. 1 X-radiation limit curve according to JEDEC94, at a constant anode current of 250 μA, measured according to TEPAC103A.

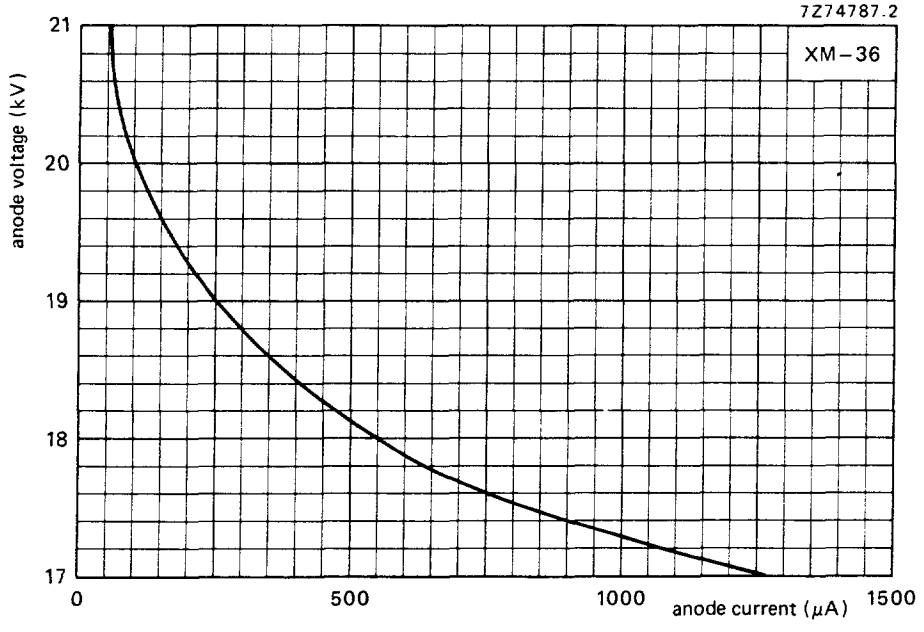

Fig. 2 0,5 mR/h isoexposure-rate limit curve, according to JEDEC94, measured according to TEPAC103A.

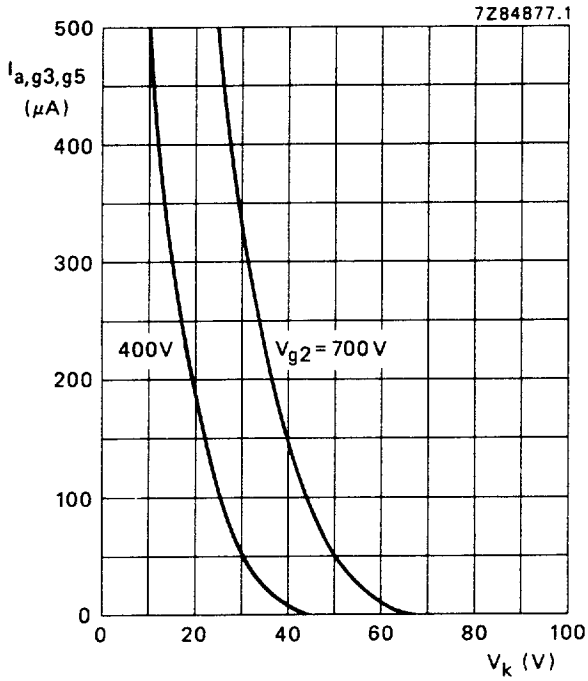

Fig. 3 Anode current as a function of cathode voltage.
Cathode drive; $V_{a,g3,g5}$ = 12 kV.

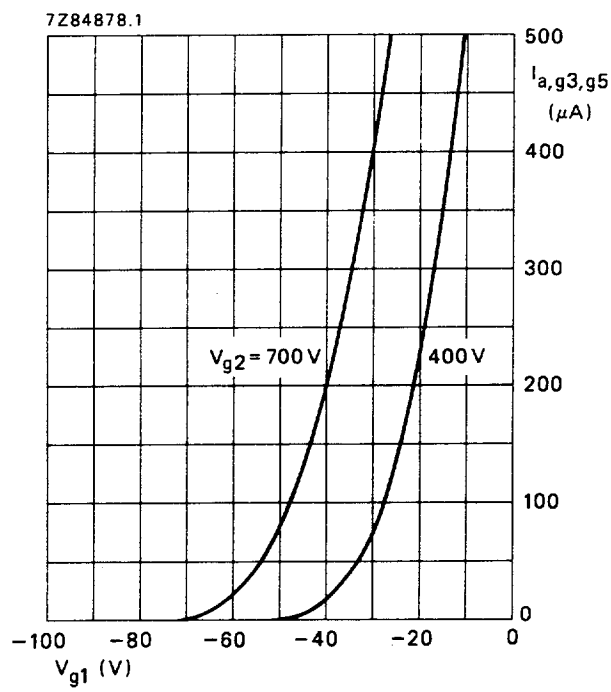

Fig. 4 Anode current as a function of grid 1 voltage.
Grid drive; $V_{a,g3,g5}$ = 12 kV.

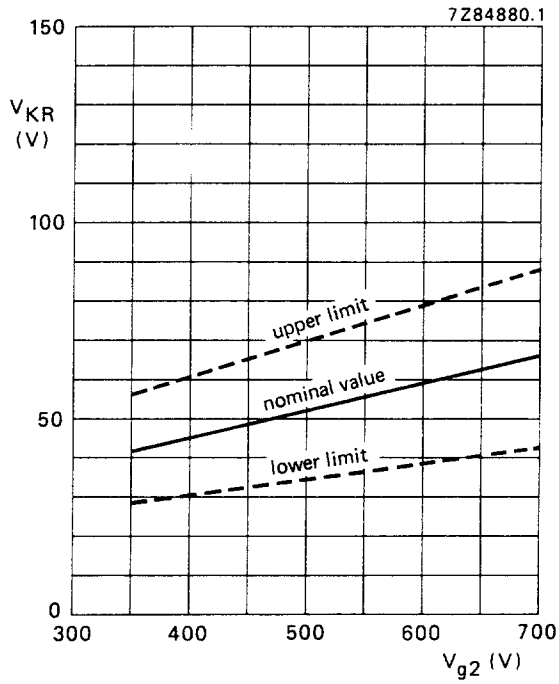

Fig. 5 Limits of cathode cut-off voltage as a function of grid 2 voltage.
Cathode drive; $V_{a,g3,g5}$ = 12 kV.

$$\frac{\Delta V_{KR}}{\Delta V_{a,g3,g5}} = 0{,}9 \times 10^{-3}.$$

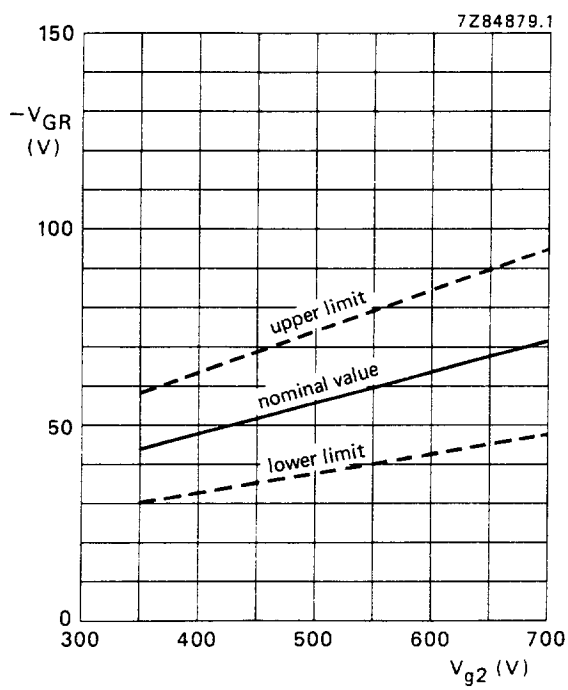

Fig. 6 Limits of grid 1 cut-off voltage as a function of grid 2 voltage.
Grid drive, $V_{a,g3,g5}$ = 12 kV.

$$\frac{\Delta V_{GR}}{\ldots} = 0{,}9 \times 10^{-3}$$

Dimensions in mm

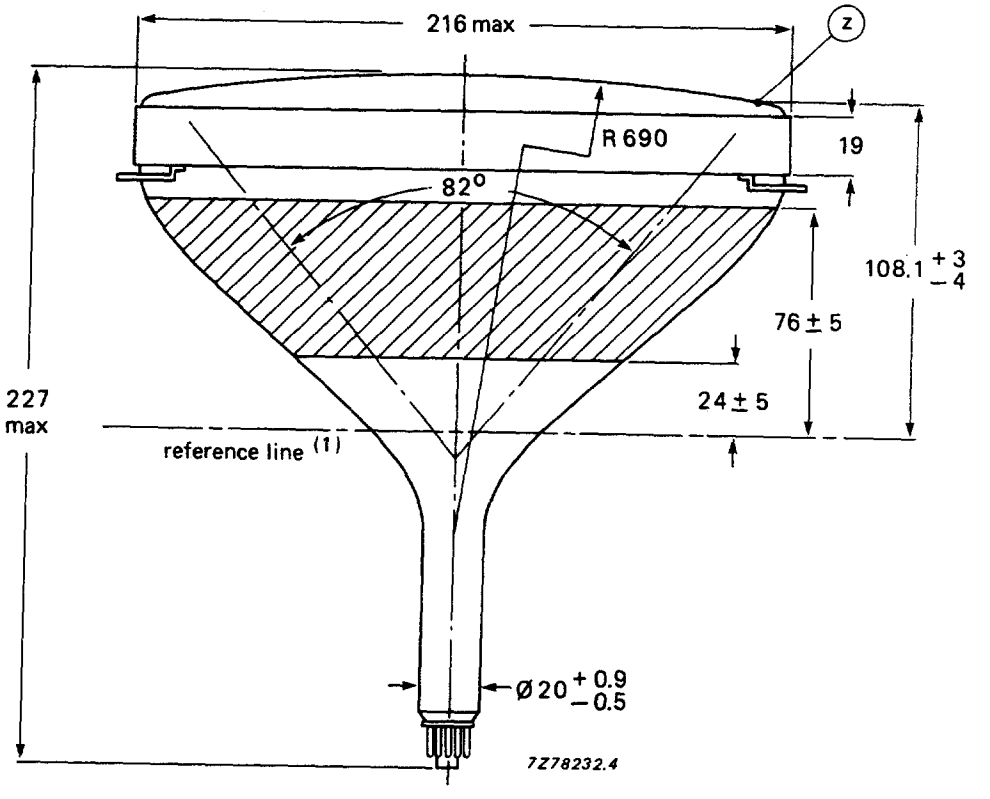

Fig. 7.

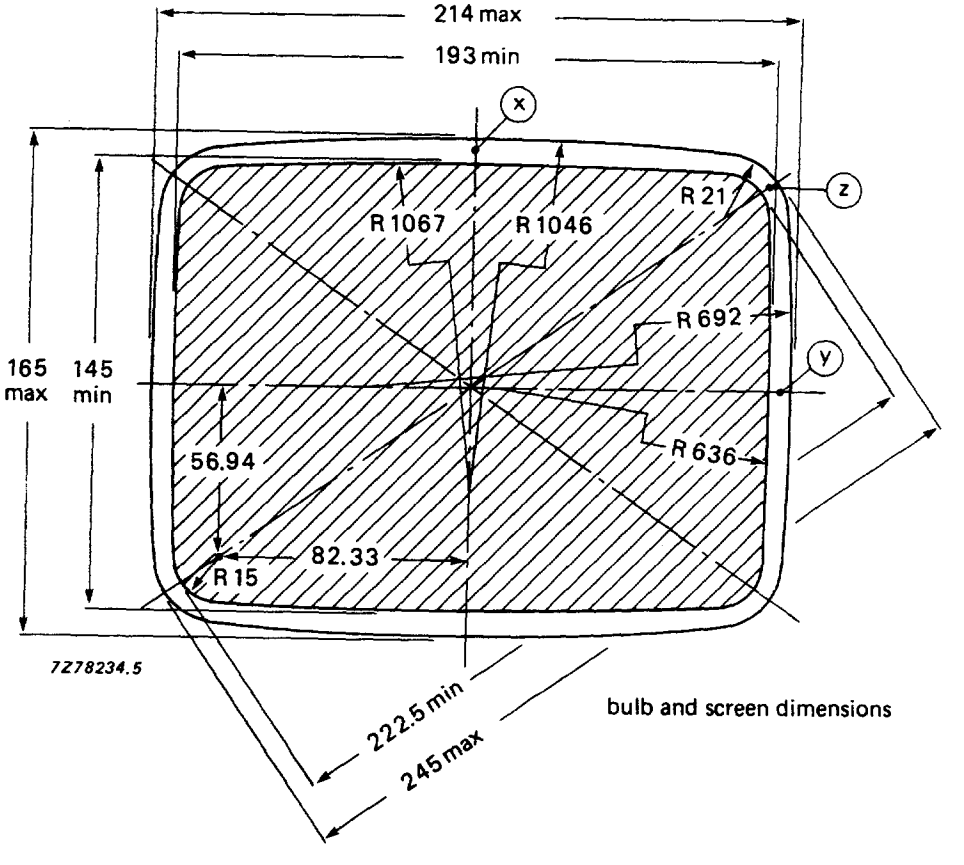

Fig. 8.

(1) The reference line is determined by the plane of the upper edge of reference line gauge D when the gauge is resting on the cone.

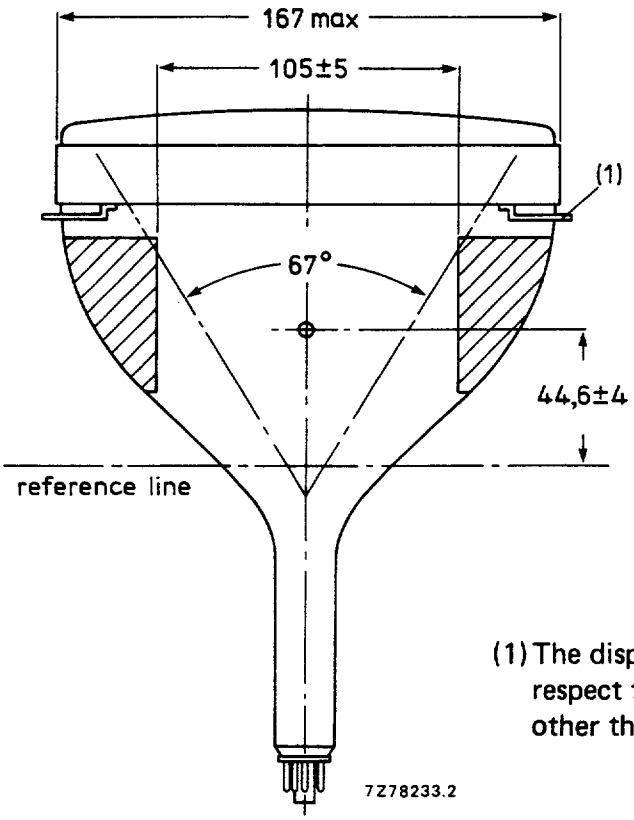

(1) The displacement of any lug with respect to the plane through the other three lugs is max. 1,8 mm.

Fig. 9.

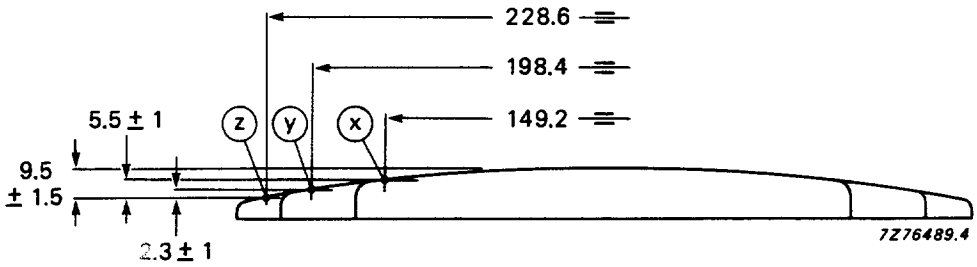

Fig. 10 Screen reference points.

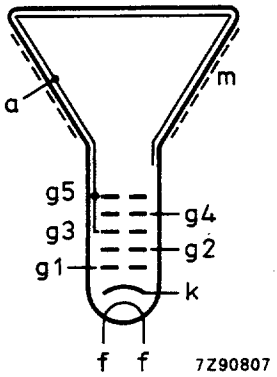

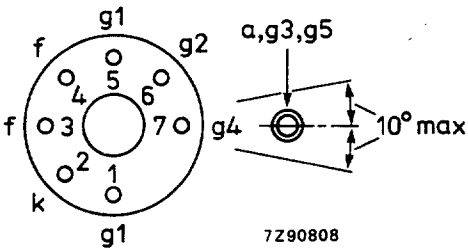

view and lug dimensions of tube M24-308

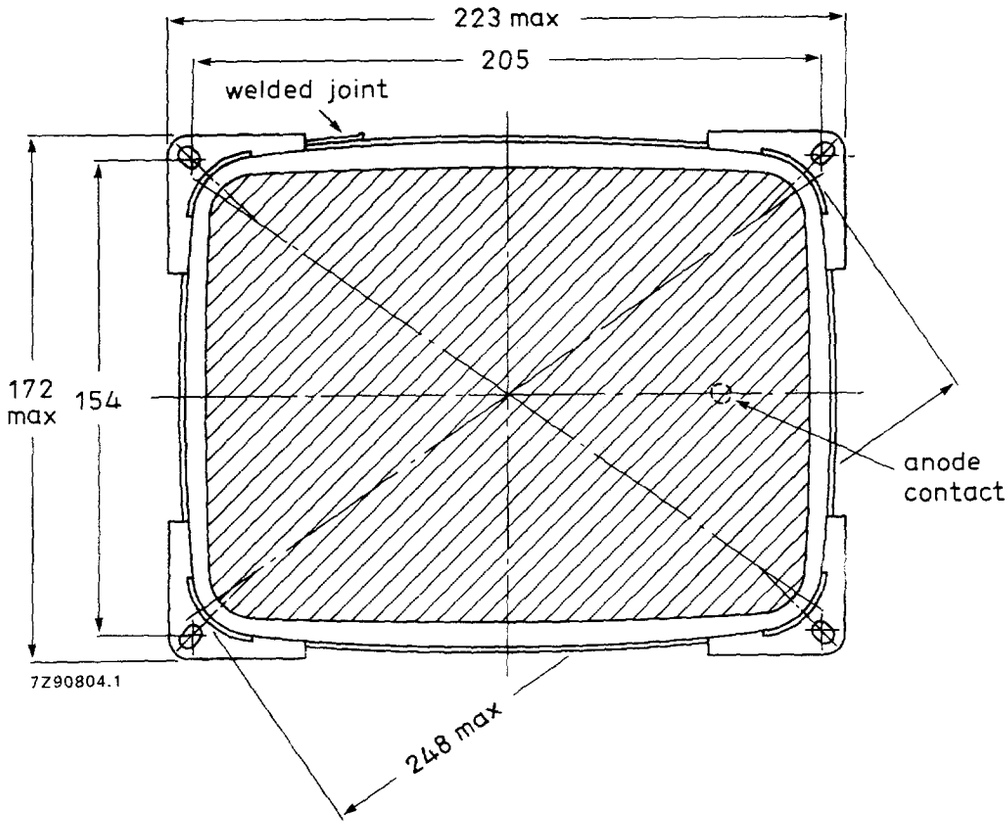

Fig. 16 Tube mounting dimensions; front view.

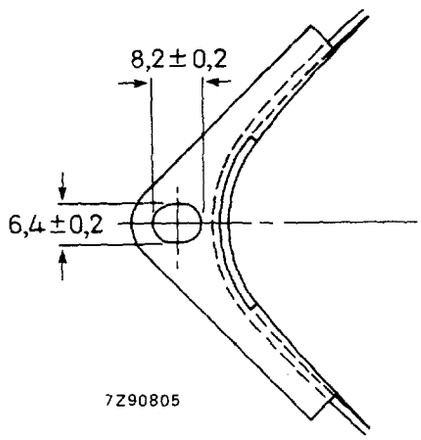

Fig. 17 Lug dimensions.

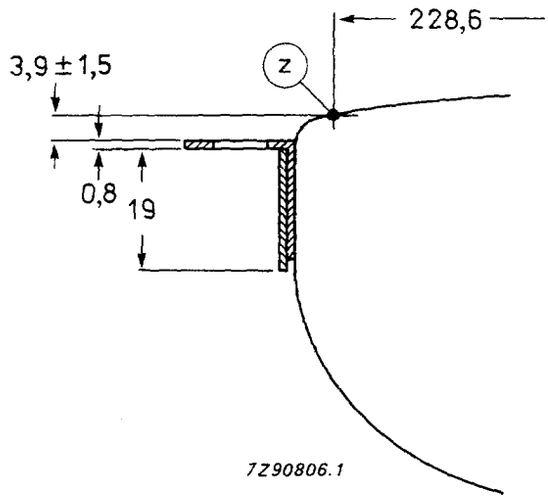

Fig. 18 Lug position.