NET IMPEDANCE (Z)			
Frequency	300 MHz	500 MHz	1 GHz
Nominal (REF)	172 Ω	192 Ω	150 Ω
Minimum	- Ω	163 Ω	- Ω

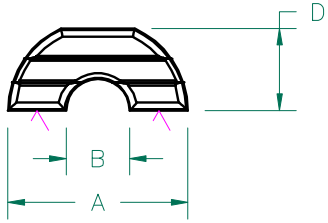

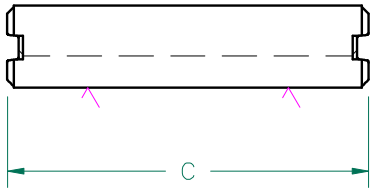

CORE DIMENSIONS:

A	9.96 [.392]	±	0.15 [.006]
B	3.51 [.138]	±	0.13 [.005]
C	20.00 [.787]	±	0.25 [.010]
D	4.54 [.179]	±	0.13 [.005]

UNCONTROLLED DOCUMENT

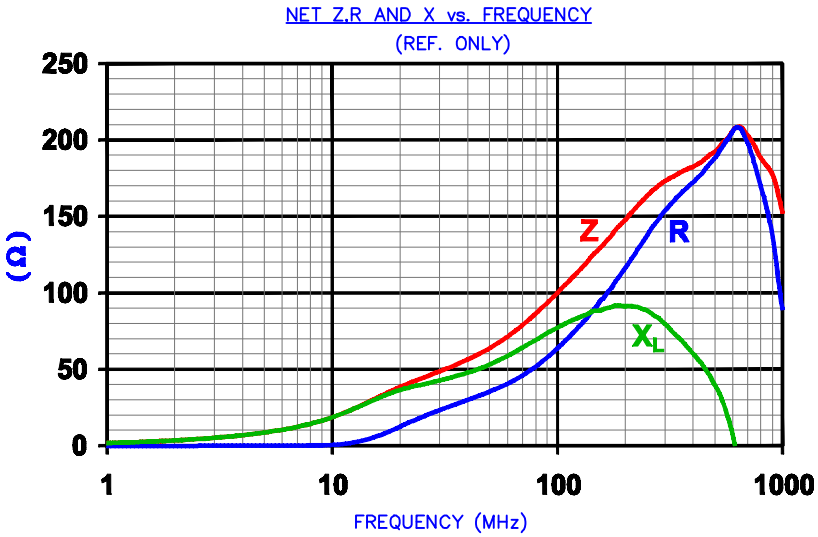

AGILENT E4991A Impedance/Material Analyzer
HP 16092A-Test Fixture REF5884

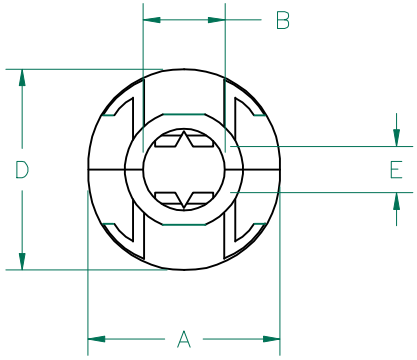

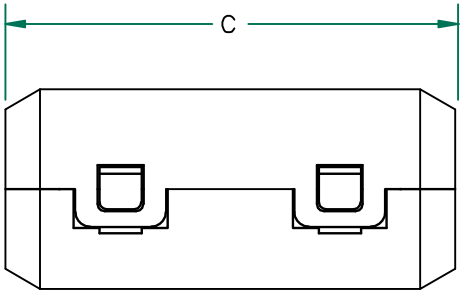

NOTES:

1. ASSEMBLED PART #: HFA100035-0A2.
2. CASE COLOR: BLACK-0A2.

CASE DIMENSIONS:

A	13.0 [.511]	±	REF.
B	3.50 [.138]	±	REF.
C	25.20 [.992]	±	REF.
D	11.50 [.453]	±	REF.
E	2.42 [.095]	±	REF.

DIMENSIONS ARE IN mm [INCHES].

REV	DESCRIPTION	DATE	INT
C	UPDATE COMPANY LOGO	04/16/07	TMB
B	ADD Z SPEC VALUES AND Z,R,X CURVE	03/13/07	TMB
A	ORIGINAL DRAFT	12/01/06	TMB

THIS DOCUMENT CONTAINS INFORMATION WHICH IS PROPRIETARY AND CONFIDENTIAL TO STEWARD. NO PRODUCTION OR PUBLICATION OF THIS DOCUMENT IN WHOLE OR IN PART SHALL BE MADE WITHOUT WRITTEN AUTHORIZATION FROM STEWARD.

Steward | Laird

PROJECT/PART NUMBER:	REV	DRAWN BY:
HFA100035-0A2	C	TMB
DATE: 12/01/06	SCALE: 2 : 1	MATERIAL: NiZn FERRITE
CAD # HFA100035-0A2-C	TOOL # –	