TCW4 IO-LINK

IO-LINK ABSOLUTE MULTI-TURN MODULAR SENSOR

Introduction

The TCW4 IO-Link version provides a compact versatile multi-turn absolute position indication. The two-part construction keeps the profile low, delivering a high degree of flexibility for tight installations. By using the IO-Link protocol, integration and set-up of sensors is greatly simplified, supporting the move to factory 4.0 and IIOT initiatives. The TCW4 IO-Link is sealed to IP65 making it suitable for even the harshest industrial environments.

Features

- With its two-part design, the TCW4 IO-Link absolute multi-turn position sensor offers maximum flexibility during installation
- IO-Link with COM3 transmission rate
- Easy commissioning and configuration with IO-Link
- Simple device replacement with Data Storage capability
- Universal power supply by IO-Link Master
- Robust and excellent resistance to shock and vibration
- Robust magnetic technology
- Standard IP65 protection (IP69K option)
- Operating temperature range from -20°C to 85°C
- Resolution : programmable 12 bits per turn and 16 bits of turns counting
- Standard M12 connector

Applications

- Factory Automation
- Process Automation

SPECIFICATIONS

Mechanical

Terminations	PUR cable with M12 5 pin connector
Housing	Technomelt PA638 black
Weight	0,150 kg

Electrical

Electrical Angle	360°
Output Function	IO-Link V1.1, COM3 (230,4 kBaud)
Minimal Cycle Time	1ms
Resolution	Full programmable Resolution per turn : 1 to 12 bits Turn counter : 16 bits max
Accuracy	+/-0.3% on 360°
Repeatability	+/-0.1% on 360°
Supply Voltage	18 to 30 Vdc
Current Requirements	<40mA

Protection	Overvoltage Protection: Yes Reverse Polarity Protection: Yes Short Circuit Protection: Yes
EMC	IEC 61000-4-2 Electrostatic discharge (ESD) 4 kV, 8 kV IEC 61000-4-3 Electromagnetic fields 10 V/m (80MHz - 1GHz), 3V/m (1.4GHz - 2GHz), 1V/m (2GHz - 2.7GHz) IEC 61000-4-4 Electrical fast transients (burst) 1 kV IEC 61000-4-6 Conducted disturbances, induced by RF-fields 10 VEMF.

Environmental

Protection Class (Sealing)		IP65
Temperature Range	**Operating**	-20°C to 85°C
	Storage	-20°C to 85°C
Shock		≤ 2000 m.s^{-2} (6ms half-sine)
Vibration		≤ 200 m.s^{-2} (55 … 2000 Hz)

DIMENSIONS

All Dimensions are in millimeters.
Shaft system with magnet to be ordered separately (See Accessories).

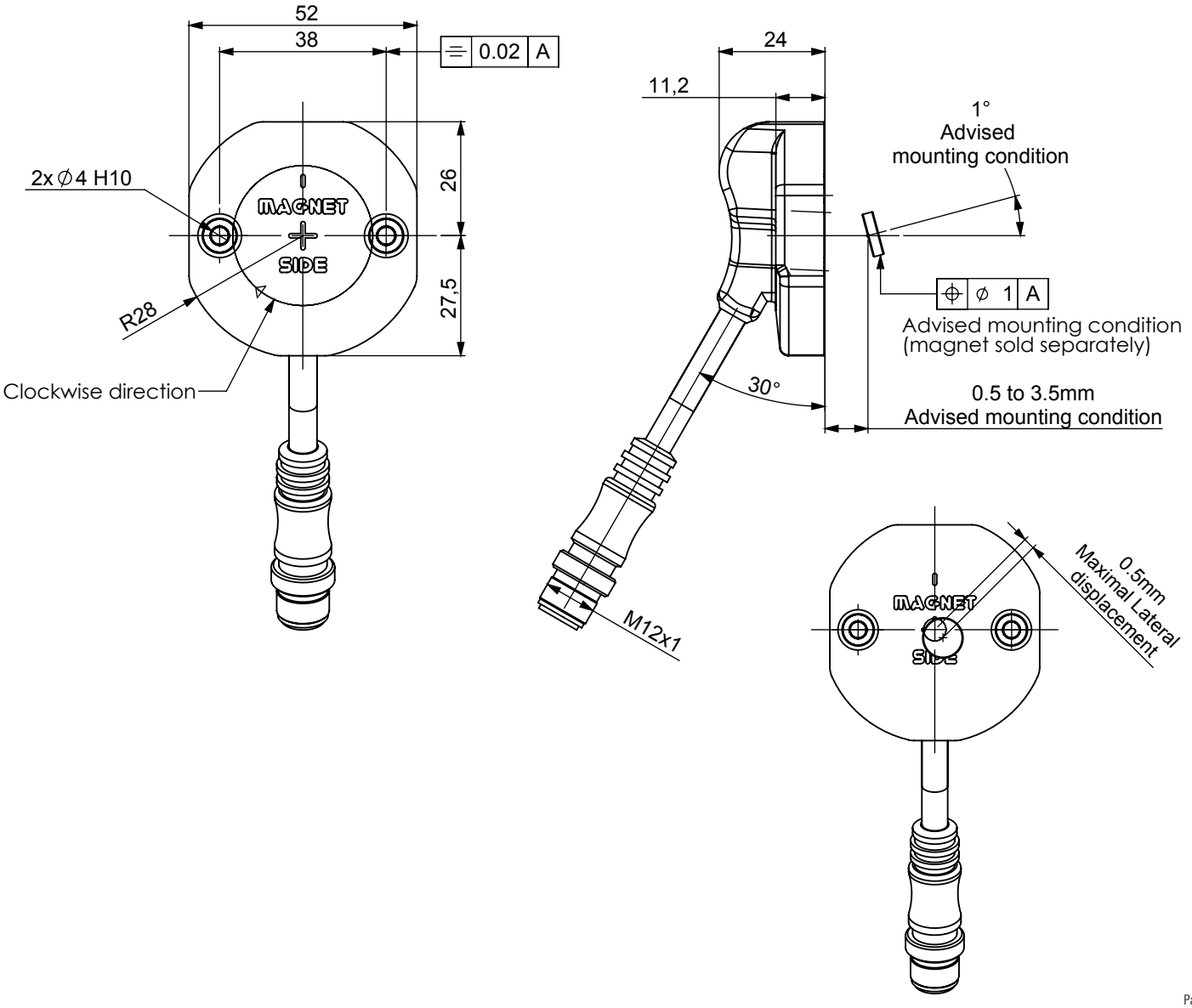

IO-LINK FEATURES

Process data
- Position : single turn 12 bits maximum
- Multiturn counter : number of rotations
- Absolute position error : flag triggered if multiturn position lost
- Magnetic field issue : flag triggered if problem with magnet detection

Programmable Parameters
- Resolution per turn: 1 to 12 bits
- Direction : clockwise or counter-clockwise, changes counting direction.
- Multiturn counter resolution: 1 to 16 bits.
- Set zero point : reset position to zero
- Preset value : The position process data is set to the preset parameters. The preset parameter shall be a valid position value according to the resolutions chosen.

Diagnostics
- Operating Hours : number of hours since factory reset

CONNECTOR PIN OUT

IO-link device class B (Male M12 5 pin)

Pin	Color	Signal
1	Brown	L+
2	White	N.C
3	Blue	L-
4	Black	IO-Link
5	Grey	N.C

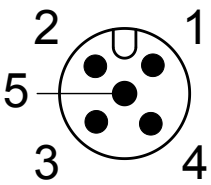

NOTES

Stray magnetic fields can interfere with accuracy and repeatability of the signal.
For multi-turn devices, stray magnetic fields during power-off condition can cause the loss of the multi-turn position.

ORDERING OPTIONS

Example : TCW4_00//ZIOB//12B16//BDD003

(Contact the factory for special versions, ex : dimensions, connections...)

TCW4 – 00 // Z IO B // 12B16 // BD D003

Family

TCW4: Absolute Multi-Turn Sensor

Shaft Ø

00: Modular

Supply

Z: 18 to 30Vdc

Output Stage

IO: IO-Link

Code

B: Binary

Resolution

12B16: Programmabe 12 bits single turn resolution and 16bits multi-turn counter

Connection

BD: PUR Cable + M12 5 pin connector

Connection Orientation

D003: Diagonal Cable 30cm

ACCESSORIES

Female magnet support + Magnet 8810/013
Ordering p/n : **M9105/Kxx**

KXX: Where XX is the shaft mounting diameter in mm. Standards are 06, 08, 10, 11, and 14 mm. i.e M9105/K10 mounts to a 10 mm shaft.

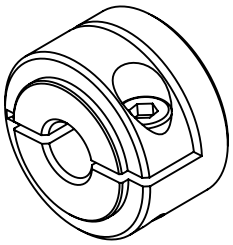

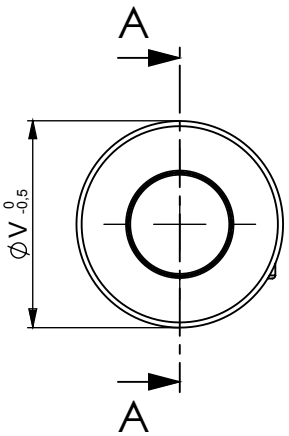

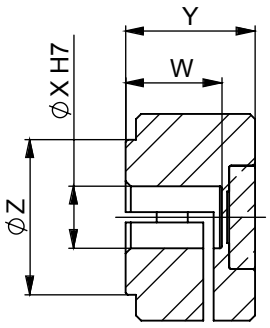

SECTION A-A

	M9105/K06	M9105/K08	M9105/K10	M9105/K11	M9105/K14
X	06 H7	08 H7	10 H7	11 H7	14 H7
V	20	20	26	26	29
W	9,3	9,3	10	10	10
Y	12,5	12,5	14	14	14
Z	15	15	15	15	18

Frontal magnet support + Magnet 8810/013
Ordering p/n : **M9105/F26**

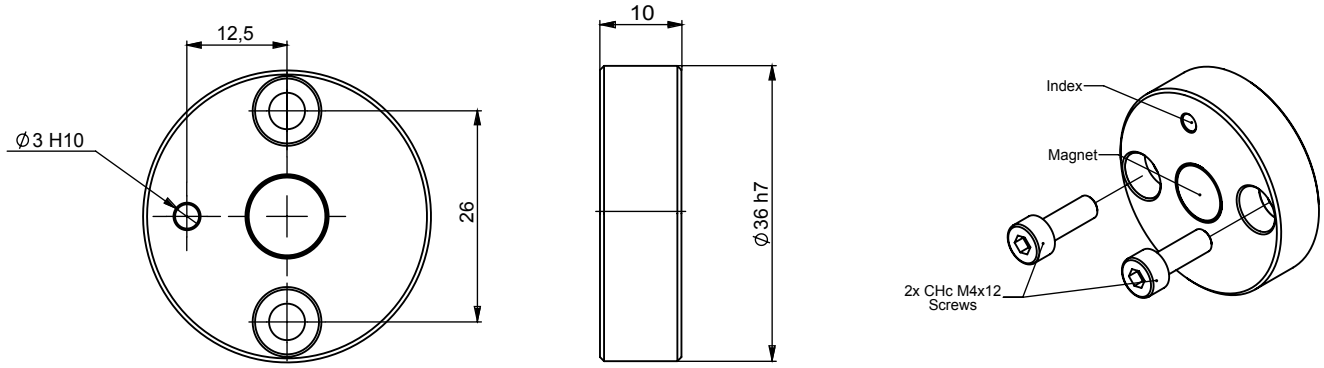

Male magnet support + Magnet 8810/013
Ordering p/n : **M9105/M10-01**

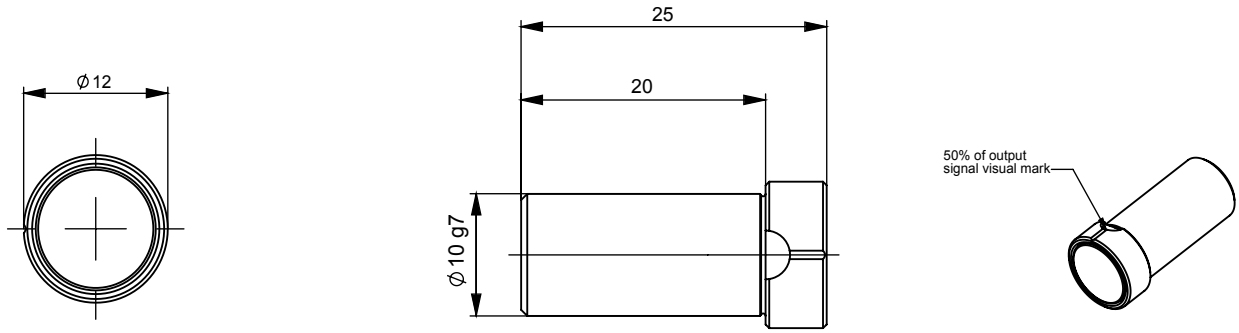

Magnet
Ordering p/n : **8810/013**

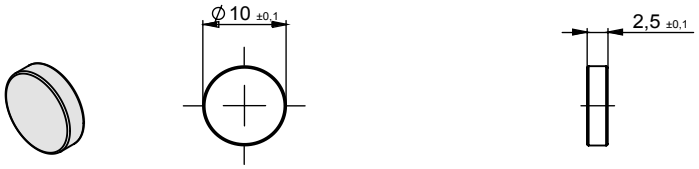

Mailing Address: Sensata Technologies, Inc., 529 Pleasant Street, Attleboro, MA 02703, USA.

CONTACT US
Americas
+1 (800) 350 2727
sales.beisensors@sensata.com
EMEA
position-info.eu@sensata.com
+33 (3) 88 20 8080
Asia Pacific
sales.isasia@list.sensata.com
China +86 (21) 2306 1500
Japan +81 (45) 277 7117
Korea +82 (31) 601 2004
India +91 (80) 67920890
Rest of Asia +886 (2) 27602006 ext 2808

No. 02321-001 Rev.12/02/19