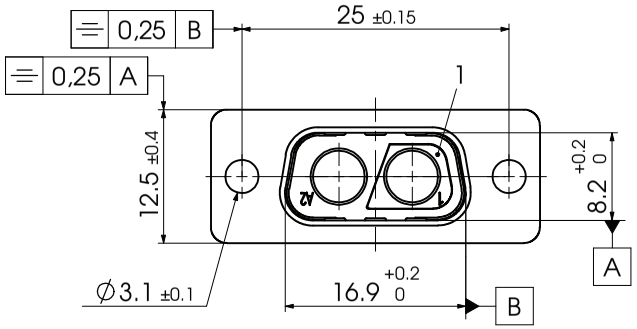

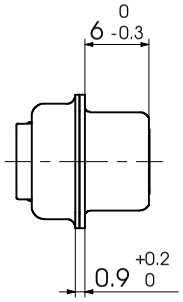

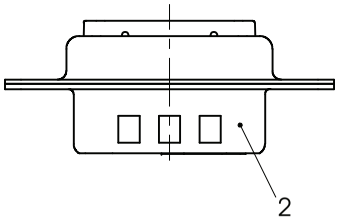

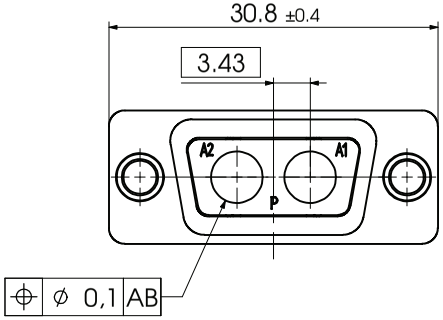

No.	St.	Part	Type Description/Material	Surface plating/Colour/Class
2	1	Shell	Steel	tin plated
1	1	Insulator	PBT (-55°C - +130°C)	black

Measurement without tolerance acc. to ISO 2768-m

SCALE 2:1

	NAME / DATE
DRAWN	Denzinger 16-05-2003
CHECKED	Floßmann 16-05-2003

TITLE

D-Sub Mixed-Layout Connector

FCT group
fctgroup.com

DWG.NO. F2W2PC-K120

REV. 1

REV.	DATE	CH.-NO.
1		

ORIGINAL: DIN A3-DRAWING AS A FILE

REPLACEMENT FOR: F2W2PC-K120 a

PAGES 1

COMMENT:
ALL RIGHTS ARE RESERVED BY US FOR THIS DRAWING, WITHOUT OUR PRIOR CONSENT,
IT MAY NEITHER BE DUBLICATED NOR MADE AVAILABLE TO A THIRD PARTY,
AND IT ALSO MAY NOT BE IMPROPERLY USED BY TE RECEIVER, OR A THIRD PARTY.