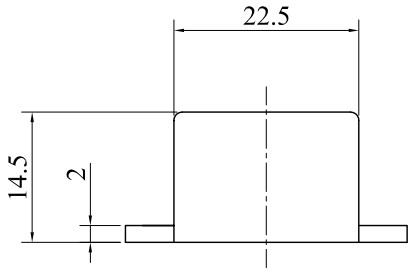

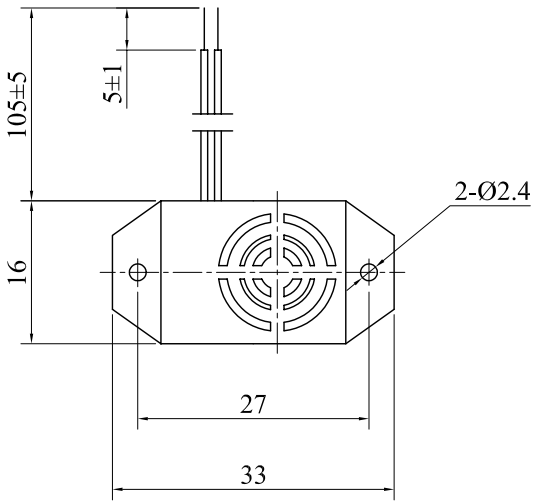

SPECIFICATION

1.Rated Voltage 6VDC
2.Operating Voltage .....4~8VDC
3.Max.Rated Current .....30mA at 6VDC
4.Resonant Frequency .....400±100Hz
5.Min.Sound Pressure Level.....75dB at 6VDC/20cm
6.Response Time.....≤50ms
7.Case Material .....ABS
8.Operating Temperature .....-20~+60℃
9.Store Temperature .....-30~+70℃
10.Weight 10g

No.	DESCRIPTION	APPROVED	DATE

TOLERANCES UNLESS NOTED OTHERWISE
.X ±
.XX ±
.XXX ±
90° FORMED +2°
ANGLES -1°

FIRST ANGLE PROJECTION

APPROVALS	DATE
DRAWN	
CHECKED	
APPROVED	03.01.15

KEPO NINGBO KEEP IMPROVING ELECTRONIC CO.,LTD
http://www.chinaacoustic.com

Magnetic Buzzer
KPMB-2206L

UNIT mm | DWG NO. KP3.840.642
SCALE | SHEET | VER 1.0