PULT

DESIGN
ABS enclosure with either a 10° or 12° incline for easy operation and readability, square corners and four non-skid feet (Mod. PT/4). The base walls have integral PCB guides. Two aluminium panels closing by four screws.

OPTIONS
Flame retardant materials
CNC machining
Punching
RFI shielding
Silk-screening

MATERIALS and COLOURS

ABS		*ALUMINIUM*	
Black	RAL 9004	Silver	RAL 9006
Light Gray	RAL 9018		

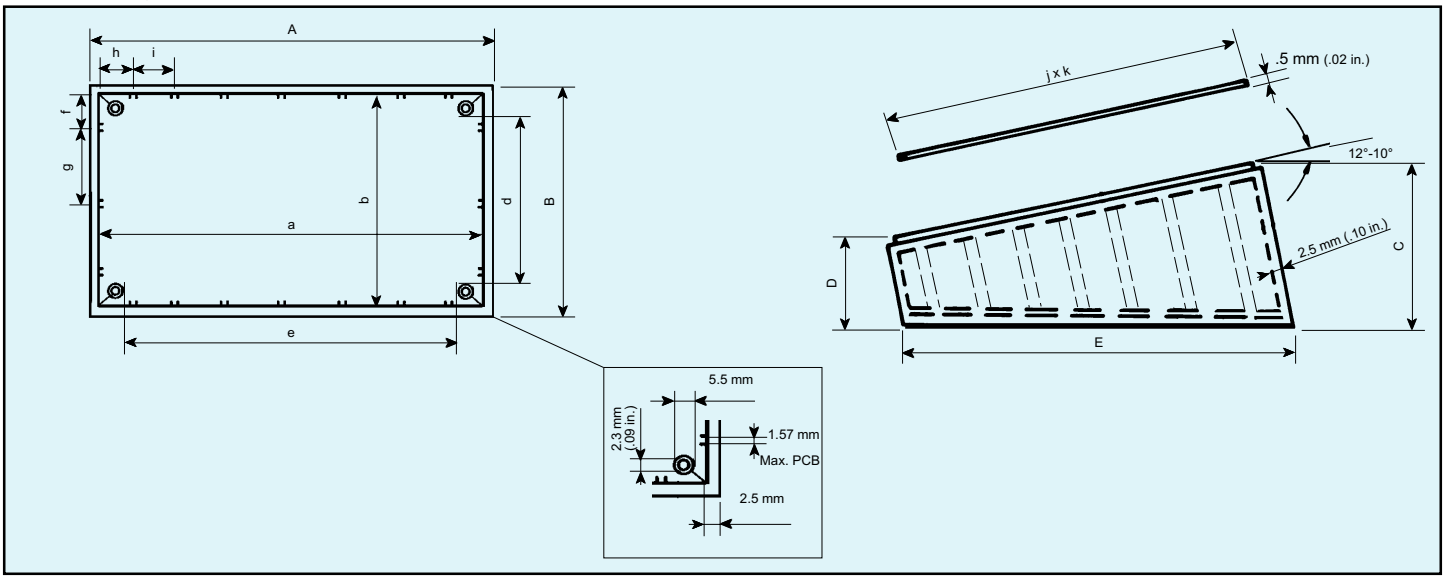

MODEL	DIMENSIONS mm																	
	EXTERNAL						INTERNAL											
	A	B	C	D	E	F	a	b	c	d	e	f	g	h	i	j	k	l
101	85.0	56.0	35.0	21.0	87.0		81.0	51.0	70.6	38.0	67.0	10.5	15.0	10.5	15.0	77.0	47.0	
102	110.0	70.0	46.0	26.0	114.0		105.0	65.0	94.0	49.0	89.0	12.5	20.0	12.5	20.0	101.0	61.0	
103	160.0	96.0	59.0	32.0	165.0		155.0	91.0	144.8	77.0	141.0	12.5	16.5	13.0	21.5	151.0	87.0	
104	215.0	130.0	75.0	40.0	217.0		210.0	125.0	199.0	109.0	195.0	34.5	28.0	10.5	31.5	206.0	121.0	