Product Information

2470PJO075P40

EAN 4031582010404

Swivel castor, Housing made of pressed steel, zinc-chromatised, double ball bearing swivel head.

Wheel centre made of Polypropylene, Tread: TENTEprene (thermoplastic rubber), grey non-marking, plain bearing, plate fitting

Option:

This castor is also in electric conductive version available. Please replace PJO with YGO when ordering..

Wheel diameter	75 mm
Width of Tread	25 mm
Size of Plate	60 x 60 mm
Plate hole centres	48/38 x 48/38 mm
Plate hole	6.3 mm
Offset	24 mm
Swivel Interference	123 mm
Overall height	100 mm
Temperature	- 20 / + 60 °C
Standard	EN 12530
Weight	0.242 Kg / daN
Dynamic Load capacity	75 Kg / daN
Static Load capacity	150 Kg / daN
Swivel Radius	61.5 mm

Versions:

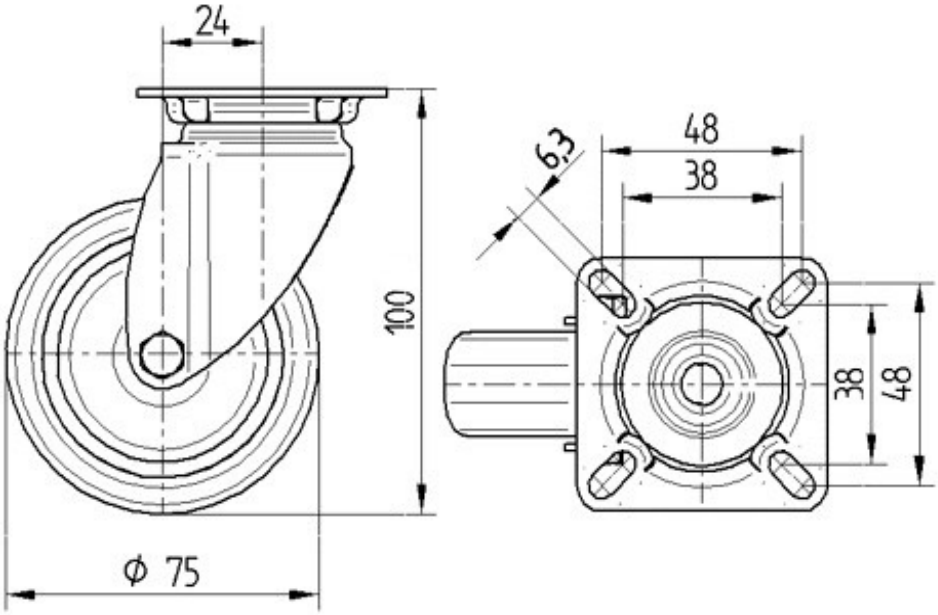

© Copyright 2006, TENTE International, www.tente.com, 01/11/2006