90 x 100 x 30 cm

35.4” x 39.4” x 11.8”

ADVANTAGE PLUS 3/300

5 Años Garantía
Years Guarantee
Jahre Garantie
Ans Garantie
Anos de Garantia
SIMONRACK

*MEDIDAS EN USO USED MEASUREMENTS
MASSNAHMEN IM EINSATZ MESURES EN EMPLOI MEDIDAS EM USO:
900 x 1010 x 310 mm (35.4” x 39.7” x 12.2”)

8 425437 083952

ESTANTERIAS SIMON S.L. B.50.556.463
PG. ALFAMEN C/ POLIGONO C, Nº3
ALFAMEN (ZARAGOZA)

Simon Rack
SINCE 1964 - MANUFACTURER

*

www.simonrack.com

MADE IN SPAIN
European Quality

EPOXY POLIESTER

EMPRESA CERTIFICADA
EN SISTEMA DE GESTIÓN DE CALIDAD
ISO 9001:2015

INSTRUCCIONES
INSTRUCTIONS
ANLEITUNG
INSTRUCTIONS

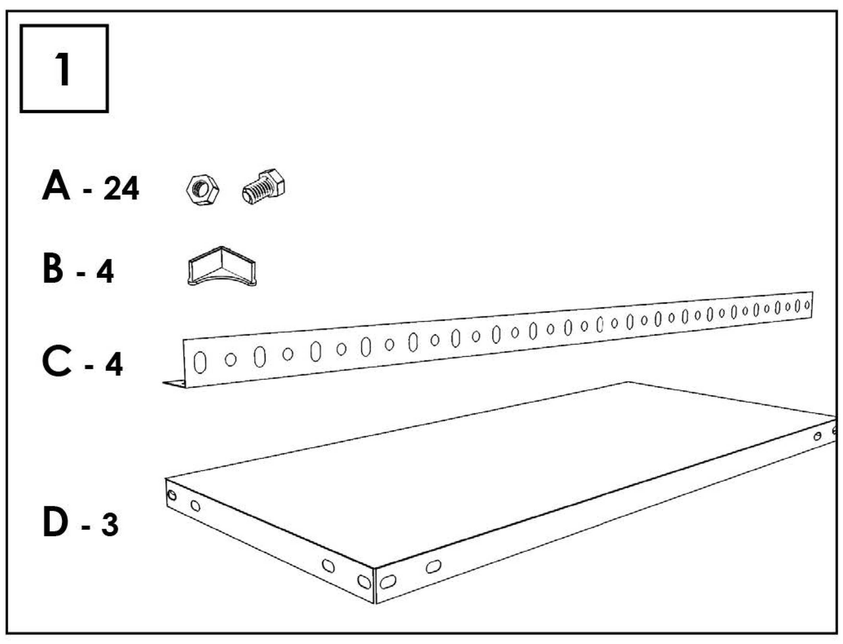

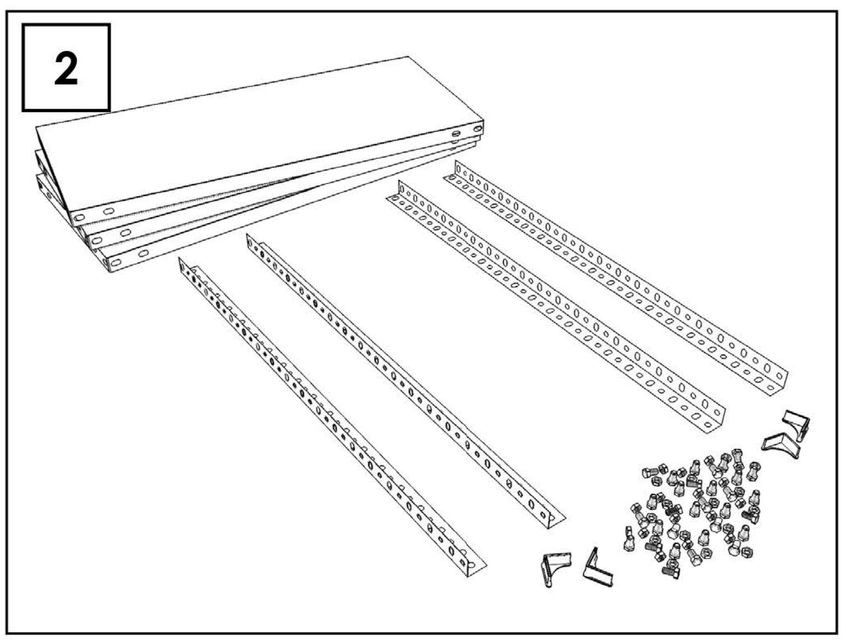

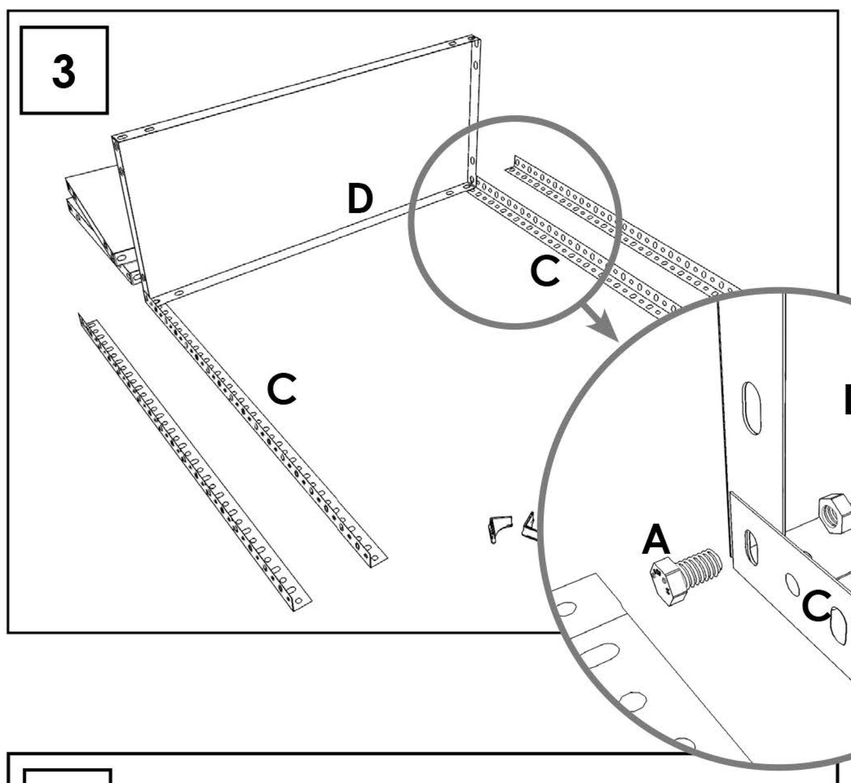

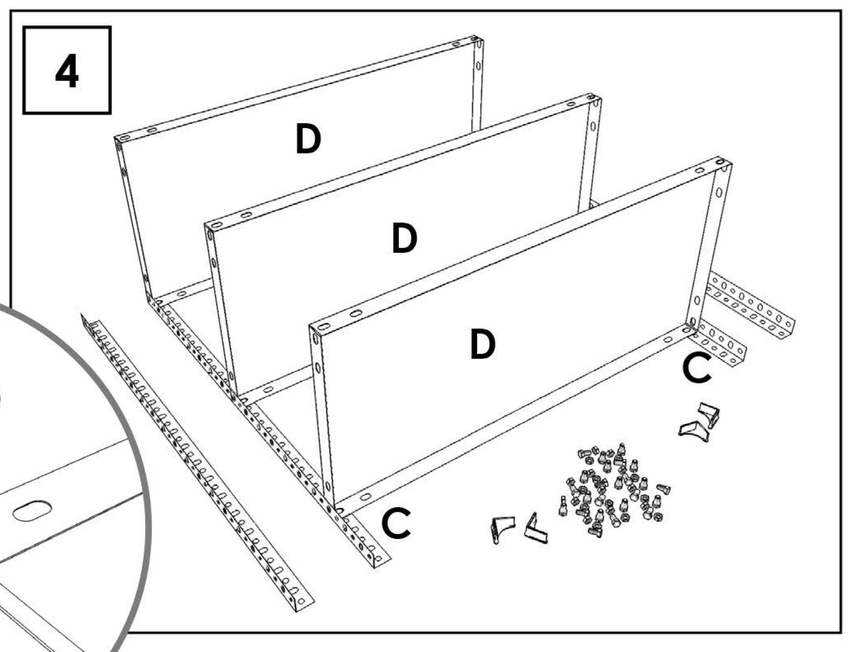

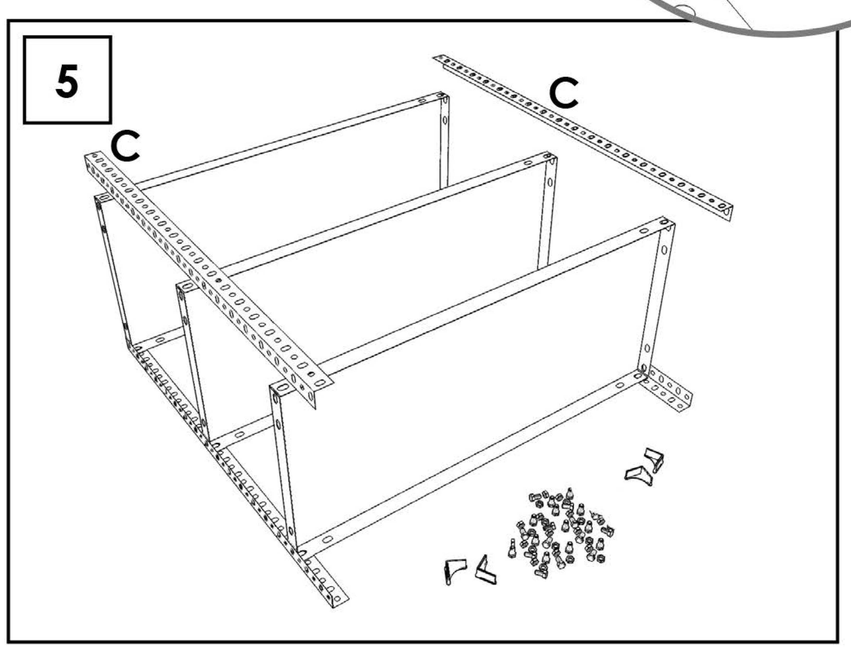

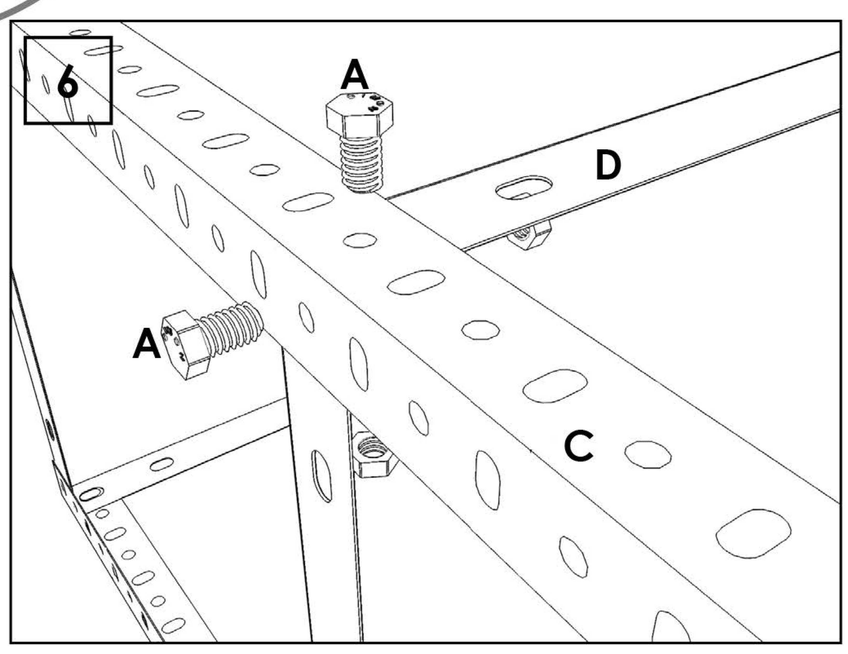

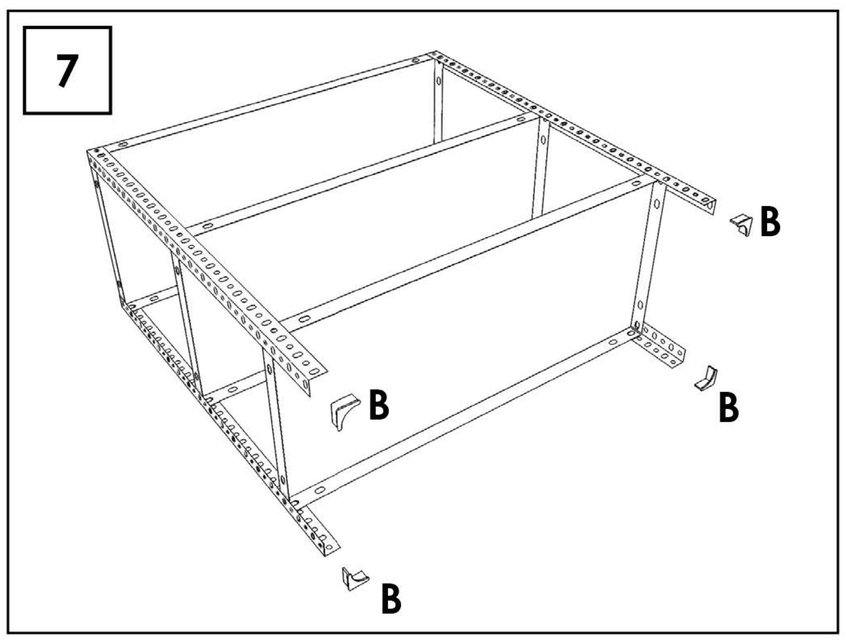

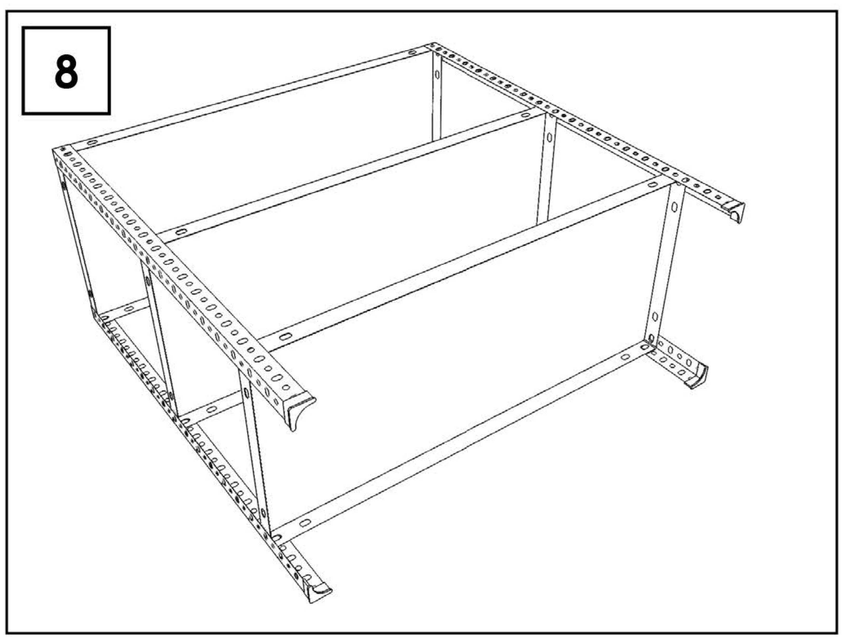

On-line instructions: www.simonrack.com/instructions **LOGIN: 120753**

www.simonrack.com • www.simonrack.com • www.simonrack.com • www.simonrack.com • www.simonrack.com • www.simonrack.com • www.simonrack.com • www.simonrack.com • www.si

SIMONCLASSIC

SIMONCLICK

OFFICLICK

SIMONFORTE

SIMONCROMO

SIMONINOX

SIMONTITÁN

SIMONLEVER

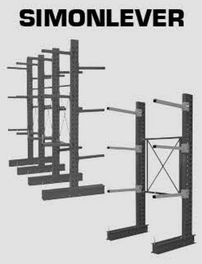

SIMONPALET