DO NOT SCALE THIS DRAWING

| DRAWING NUMBER | REVISIONS | | | | |
|---|---|---|---|---|---|
| 31-343-RFX | SYM | DESCRIPTION | DATE | E.C.O. NO. | APPR. |
| | A | OFFICIAL ENG. RELEASE TO MFG. | 10/2/91 | 38063 | DR |

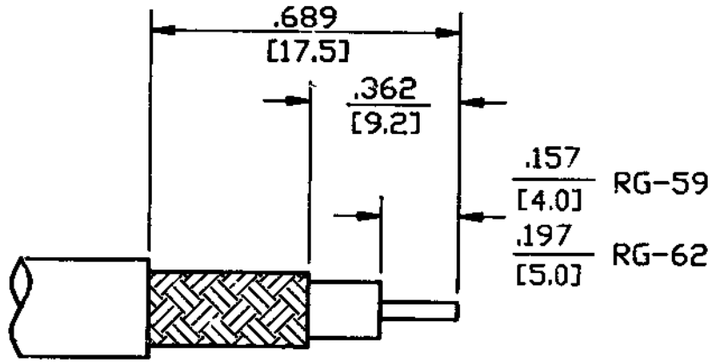


RECOMMENDED CABLE STRIPPING DIM'S

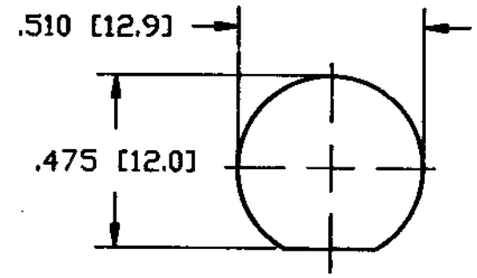


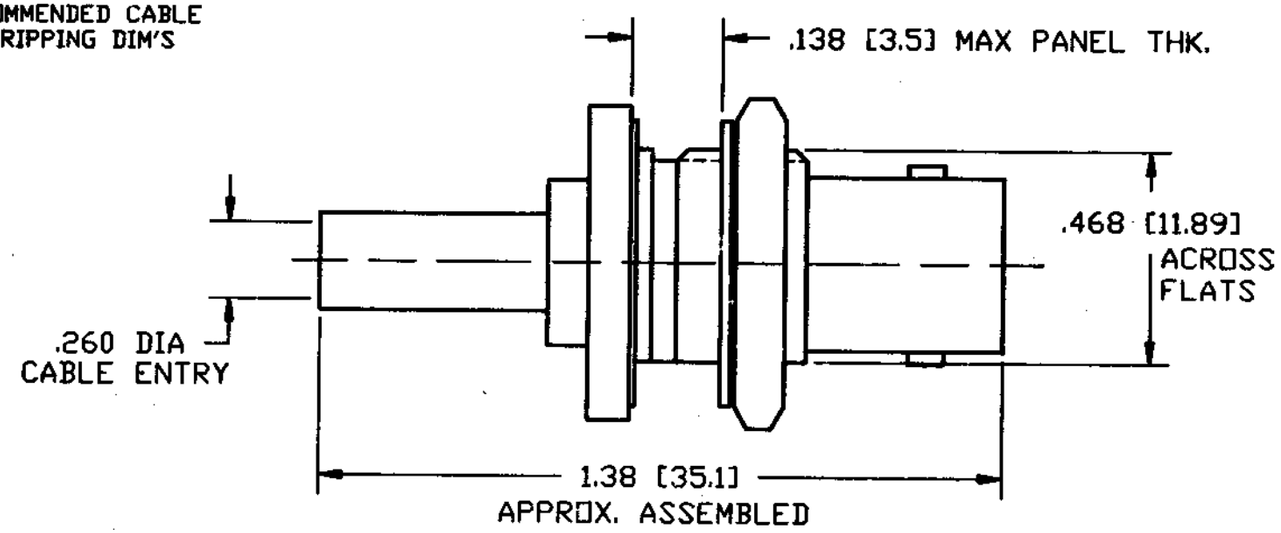


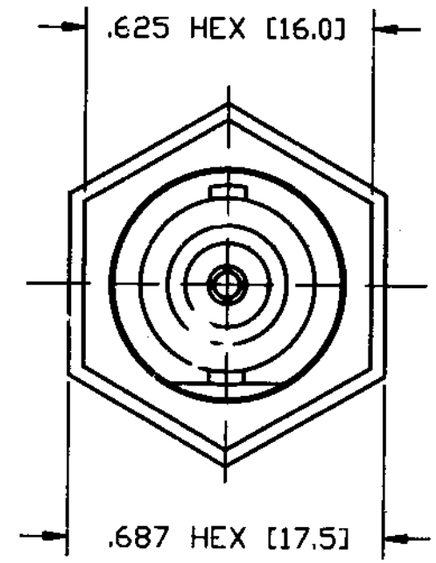


NOTES:

1. BRASS BODY, NICKEL PLATED.
2. DELRIN INSULATORS.
3. GOLD PLATED, PHOSPHOR BRONZE CONTACT, .000003.
4. PACKAGED IN BAG 999-358.
5. USE AMPHENOL CRIMP TOOL #CTL-1.
6. NON-CAPTIVATED CONTACT, .030 WIRE ENTRY.
7. 3 PC. (BODY, FERRULE, CONTACT).
8. BUSHING SUPPLIED FOR RG-62 CABLE.

ENGLISH [METRIC]

H:\DEPT611\BNC\031\ASSY\343RFX

| PART NO. | QUAN | UOM | ITEM LINE NO | DESCRIPTION | CODE | FINISH |
|---|---|---|---|---|---|---|

LIST OF MATERIAL

REMOVE ALL BURRS, BREAK CORNERS AND SHARP EDGES .005 MAXIMUM UNLESS OTHERWISE SPECIFIED.

NOTICE — These drawings, specifications, or other data (1) are, and remain the property of Amphenol Corp. (2) must be returned upon request; and (3) are confidential and are not to be disclosed to any person other than those to whom they are given by Amphenol Corp. The furnishing of these drawings, specifications, or other data by Amphenol Corp., or by any other person to anyone for any purpose is not to be regarded by implication or otherwise as in any manner licensing, granting rights or permitting such holder or any other person to manufacture, use or sell any product, process or design, patented or otherwise, that may in any way be related to or disclosed by said drawings, specifications or other data.

| NEXT ASSY | USED ON |
|---|---|
| MATERIAL | |
| SPECIFICATION | |
| FINISH | |

UNLESS OTHERWISE SPECIFIED DIMENSIONS ARE IN INCHES. TOLERANCES NOT OTHERWISE SPECIFIED ARE:

| 2 PLACE DECIMAL | 3 PLACE DECIMAL | ANGLES |
|---|---|---|
| ±.015 (0.381 mm) | ±.005 (0.127 mm) | ± 1° |

REFERENCE DRAWING NO
EAR 962370

| | | DATE |
|---|---|---|
| DRAWN BY | TERRI ALBERA | 4-22-91 |
| CHECKED | D. W. Page | 9-13-91 |
| ENGINEER | D. W. Page | 9-13-91 |
| QUALITY ASSURANCE | [illegible] | 9/19/91 |
| MFG. ENG. | H. FREDLUND | 9/19/91 |

TITLE
BNC CRIMP CRIMP JACK FOR RG-59, 62 CABLE

**Amphenol Corporation**
RF/Microwave Operations
Danbury, Conn. U.S.A.

| CODE IDENTIFICATION | DRAWING SIZE | DRAWING NO. | ISSUE |
|---|---|---|---|
| 74868 | B | 31-343-RFX | A |

SCALE NTS SHEET OF