Light Curtain
for Measuring Tasks

OEEI501U0135

Part Number

- **Graphical display for easy operation**
- **Integrated evaluation unit**
- **Object detection and measurement**
- **Recognition of small parts**

As these light curtains for measurement task are equipped with an integrated evaluation unit, external connection units are not needed. Objects are both recognized (via the digital output) and measured (via the analog output). The light curtains can be set up easily using the menu-controlled graphic display. Convenient parametrization and quick diagnosis is possible via the IO-Link interface. The adequate mounting angle BEF-SET-33 is included in the delivery.

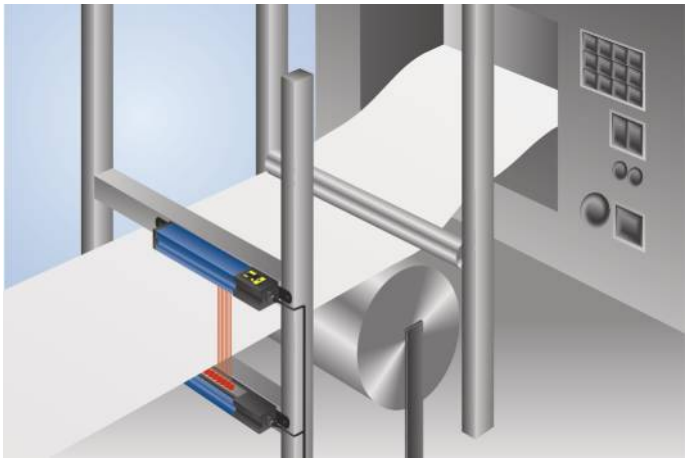

Technical Data

Optical Data	
Range	2000 mm
Measurement Field Height (MFH)	50 mm
Beam Distance	2 mm
Light Source	Infrared Light
Service Life (T = +25 °C)	100000 h
Max. Ambient Light	10000 Lux
Opening Angle	10 °
Electrical Data	
Sensor Type	Receiver
Supply Voltage	18...30 V DC
Current Consumption (Ub = 24 V)	< 60 mA
Switching Frequency	150 Hz
Response Time	3 ms
On-/Off-Delay	0...10 s
Temperature Drift	< 10 %
Temperature Range	-25...60 °C
Number of Switching Outputs	2
Switching Output Voltage Drop	< 2,5 V
Switching Output/Switching Current	100 mA
Residual Current Switching Output	< 50 µA
Analog Output	0...10 V/4...20 mA
Short Circuit and Overload Protection	yes
Reverse Polarity Protection	yes
Lockable	yes
Interface	IO-Link V1.0
Protection Class	III
Mechanical Data	
Setting Method	Menu (OLED)
Housing Material	Aluminum
Degree of Protection	IP65
Connection	M12 × 1; 4/5-pin
Switchable to NC/NO	●
Configurable as PNP/Push-Pull	●
Error Output	●
IO-Link	●
Connection Diagram No.	188
Control Panel No.	X2
Suitable Connection Equipment No.	2, 35
Suitable Mounting Technology No.	700

Suitable Emitter

OSEI501Z0103

Display brightness may decrease with age. This does not result in any impairment of the sensor function.

Complementary Products

- Analog Evaluation Unit AW02
- IO-Link Master
- Software

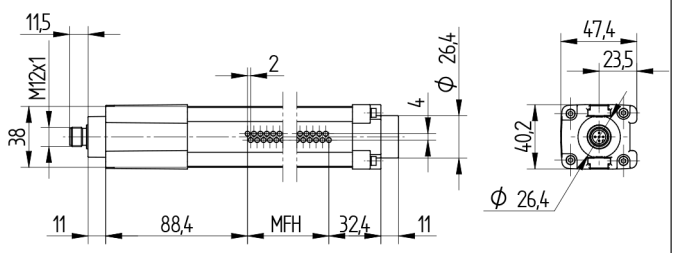

All dimensions in mm (1 mm = 0.03937 Inch)

Ctrl. Panel

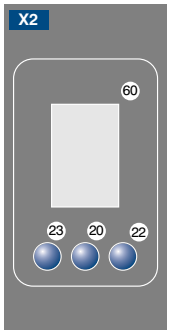

20 = Enter Button
22 = UP Button
23 = Down Button
60 = Display

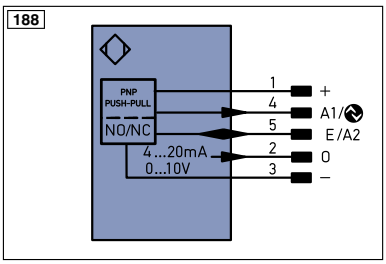

Legend

+	Supply Voltage +
–	Supply Voltage 0 V
~	Supply Voltage (AC Voltage)
A	Switching Output (NO)
Ā	Switching Output (NC)
V	Contamination/Error Output (NO)
V̄	Contamination/Error Output (NC)
E	Input (analog or digital)
T	Teach Input
Z	Time Delay (activation)
S	Shielding
RxD	Interface Receive Path
TxD	Interface Send Path
RDY	Ready
GND	Ground
CL	Clock
E/A	Output/Input programmable
	IO-Link
PoE	Power over Ethernet
IN	Safety Input
OSSD	Safety Output
Signal	Signal Output
Bl_D+/-	Ethernet Gigabit bidirect. data line (A-D)
EN0 RS422	Encoder 0-pulse 0-0̄ (TTL)
PT	Platinum measuring resistor
nc	not connected
U	Test Input
Ū	Test Input inverted
W	Trigger Input
W–	Ground for the Trigger Input
O	Analog Output
O–	Ground for the Analog Output
BZ	Block Discharge
AMV	Valve Output
a	Valve Control Output +
b	Valve Control Output 0 V
SY	Synchronization
SY–	Ground for the Synchronization
E+	Receiver-Line
S+	Emitter-Line
⏚	Grounding
SnR	Switching Distance Reduction
Rx+/–	Ethernet Receive Path
Tx+/–	Ethernet Send Path
Bus	Interfaces-Bus A(+)/B(–)
La	Emitted Light disengageable
Mag	Magnet activation
RES	Input confirmation
EDM	Contactor Monitoring
ENA RS422	Encoder A/Ā (TTL)
ENB RS422	Encoder B/B̄ (TTL)
ENA	Encoder A
ENB	Encoder B
AMIN	Digital output MIN
AMAX	Digital output MAX
AOK	Digital output OK
SY In	Synchronization In
SY OUT	Synchronization OUT
OLT	Brightness output
M	Maintenance
rsv	reserved

Wire Colors according to DIN IEC 757

BK	Black
BN	Brown
RD	Red
OG	Orange
YE	Yellow
GN	Green
BU	Blue
VT	Violet
GY	Grey
WH	White
PK	Pink
GNYE	Green/Yellow

Specifications are subject to change without notice